CALIFORNIA REGIONAL WATER QUALITY CONTROL BOARD

CENTRAL VALLEY REGION

1685 "E" Street, Fresno, California 93706-2007
Phone (559) 445-5116• Fax (559) 445-5910
http://www.waterboards.ca.gov/centralvalley

ORDER NO. <R5-2011-XXXX>
NPDES NO. CA0085308

WASTE DISCHARGE REQUIREMENTS FOR THE CITY OF ATWATER ATWATER REGIONAL WASTEWATER TREATMENT FACILITY MERCED COUNTY

The following Discharger is subject to waste discharge requirements as set forth in this Order:

Table 1. Discharger Information

Discharger	City of Atwater
Name of Facility	Atwater Regional Wastewater Treatment Facility
Facility Address	530 South Bert Crane Road
	Atwater, CA 95301
	Merced County
The U.S. Environmental Protection Agency (USEPA) and the Regional Water Quality Control Board have classified this discharge as a major discharge.	

The discharge by the City of Atwater from the discharge point identified below is subject to waste discharge requirements as set forth in this Order:

Table 2. Discharge Location

Discharge Point	Effluent Description	Discharge Point Latitude	Discharge Point Longitude	Receiving Water
001	Disinfected Tertiary Treated Municipal Wastewater	37° 16' 49" N	120° 38' 00" W	Peck/Atwater Drain

Table 3. Administrative Information

This Order was adopted by the Regional Water Quality Control Board on:	**<Adoption Date>**
This Order shall become effective on:	**<Effective Date>**
This Order shall expire on:	**<Expiration Date>**
The Discharger shall file a Report of Waste Discharge in accordance with Title 23, California Code of Regulations, as application for issuance of new waste discharge requirements no later than:	**<180 days prior to the Order expiration date>**

I, PAMELA C. CREEDON, Executive Officer, do hereby certify that this Order with all attachments is a full, true, and correct copy of an Order adopted by the California Regional Water Quality Control Board, Central Valley Region, on **<Adoption Date>**.

_____
PAMELA C. CREEDON, Executive Officer

Table of Contents

I. Facility Information 3
II. Findings 3
III. Discharge Prohibitions 9
IV. Effluent Limitations and Discharge Specifications 9
A. Effluent Limitations – Discharge Point 001 9
B. Land Discharge Specifications – Not Applicable 10
C. Reclamation Specifications – Not Applicable 10
V. Receiving Water Limitations 10
A. Surface Water Limitations 10
B. Groundwater Limitations 13
VI. Provisions 13
A. Standard Provisions 13
B. Monitoring and Reporting Program Requirements 18
C. Special Provisions 18
1. Reopener Provisions 18
2. Special Studies, Technical Reports and Additional Monitoring Requirements 19
3. Best Management Practices and Pollution Prevention 21
4. Construction, Operation and Maintenance Specifications 22
5. Special Provisions for Municipal Facilities (POTWs Only) 24
6. Other Special Provisions 28
7. Compliance Schedules – Not Applicable 29
VII. Compliance Determination 29

List of Tables

Table 1. Discharger Information 1
Table 2. Discharge Location 1
Table 3. Administrative Information 1
Table 4. Facility Information 3
Table 5. Basin Plan Beneficial Uses 6
Table 6. Effluent Limitations 9

List of Attachments

Attachment A – Definitions A-1
Attachment B – Map B-1
Attachment C – Flow Schematic 1
Attachment D – Standard Provisions D-1
Attachment E – Monitoring and Reporting Program E-1
Attachment F – Fact Sheet F-1
Attachment G – Summary of Reasonable Potential Analysis G-1
Attachment H – Calculation of WQBELs H-1
Attachment I – California Toxics Rule Constituents I-1
Attachment J – Dioxin and Furan Sampling J-1

I. FACILITY INFORMATION

The following Discharger is subject to waste discharge requirements as set forth in this Order:

Table 4. Facility Information

Discharger	City of Atwater
Name of Facility	Atwater Regional Wastewater Treatment Facility
Facility Address	530 South Bert Crane Road
	Atwater, CA 95301
	Merced County
Facility Contact, Title, and Phone	David Church, Director of Public Works, (209) 357-6370
Mailing Address	750 Bellevue Road, Atwater, CA 95301
Type of Facility	Publicly Owned Treatment Works
Facility Design Flow	6.0 million gallons per day (mgd)

II. FINDINGS

The California Regional Water Quality Control Board, Central Valley Region (hereinafter Central Valley Water Board), finds:

A. Background. The City of Atwater (hereinafter Discharger) submitted a Report of Waste Discharge, received on 4 August 2009, and applied for a National Pollutant Discharge Elimination System (NPDES) permit to discharge up to 6.0 mgd of treated wastewater from the new Atwater Regional Wastewater Treatment Facility (Facility). Additional information was received on 22 December 2009 and 1 July 2010. The Facility will replace the Atwater Wastewater Treatment Plant, which discharges to the Atwater Drain approximately six miles upstream of Discharge Point 001, and is currently permitted by Waste Discharge Requirements Order No. R5-2007-0063 (NPDES Permit No. CA0079197).

For the purposes of this Order, references to the “discharger” or “permittee” in applicable federal and state laws, regulations, plans, or policy are held to be equivalent to references to the Discharger herein.

B. Facility Description. The Discharger ownsthePublicly Owned Treatment Works. The Discharger has contracted with Veolia Water North America – West, LLC to operate and maintain the Facility.The treatment system will consist of headworks with screens and a vortex grit removal system, two oxidation ditches that will provide nitrification and denitrification, three secondary clarifiers, three cloth media filters, an ultraviolet light disinfection system, and an emergency storage basin, which will also be used to collect onsite stormwater runoff. Sludgehandling facilities will consist of two concrete aerobic digesters. Supernatant from the digesters will be conveyed to the headworks. Stabilized biosolids will be pumped to temporary holding tanks prior to dewatering. Dewatered biosolids will be hauled offsite by a third party contractor to a permitted land application site or landfill that is permitted to accept Class B biosolids. The Discharger plans to construct an onsite biosolids drying area that will be used to further dewater the biosolids prior to offsite disposal.Wastewater will be discharged from Discharge Point

001 (see table on cover page) to Peck/Atwater Drain, which is hydraulically connected to the San Joaquin River, a water of the United States,between Sack Dam and the mouth of the Merced Riverwithin the El Nido-Stevinson Hydrologic Area of the San Joaquin Valley Floor Hydrologic Unit (Hydrologic Area No. 535.70). Attachment B provides a map of the area around the Facility. Attachment C provides a flow schematic of the Facility.

C. Legal Authorities. This Order is issued pursuant to section 402 of the Clean Water Act (CWA) and implementing regulations adopted by USEPA and chapter 5.5, division 7 of the California Water Code (CWC; commencing with section 13370). It shall serve as a NPDES permit for point source discharges from this Facility to surface waters. This Order also serves as Waste Discharge Requirements (WDRs) pursuant to article 4, chapter 4, division 7 of the CWC (commencing with section 13260).

D. Background and Rationale for Requirements. The Central Valley Water Board developed the requirements in this Order based on information submitted as part of the application, through monitoring and reporting programs, and other available information. The Fact Sheet (Attachment F), which contains background information and rationale for Order requirements, is hereby incorporated into this Order and constitutes part of the Findings for this Order. Attachments A through E and G through J are also incorporated into this Order.

E. California Environmental Quality Act (CEQA). Pursuant to CEQA (Public Resources Code section 21000, et seq.), every new project must be reviewed for potential and significant environmental effects by a lead agency. When the Central Valley Water Board is not the lead agency, it must as the responsible agency for water quality, provide comment to the lead agency, as well as ensure during permitting that significant effects on water quality are mitigated. The Discharger certified a final environmental impact report (EIR) for the Facility in accordance with CEQA, and the Facility as approved by the Discharger and operated in compliance with this Order will not have a significant effect on water quality. A detailed discussion of this Order's consistency with CEQA is included in the Fact Sheet (Attachment F).

Under CWC section 13389, this action to adopt a NPDES permit is exempt from the provisions of CEQA, Public Resources Code sections 21100-21177.

F. Technology-based Effluent Limitations. Section 301(b) of the CWA and implementing USEPA permit regulations at section 122.44, title 40 of the Code of Federal Regulations (40 CFR 122.44), require that permits include conditions meeting applicable technology-based requirements at a minimum, and any more stringent effluent limitations necessary to meet applicable water quality standards. The discharge authorized by this Order must meet minimum federal technology-based requirements based on Secondary Treatment Standards at 40 CFR 133 and Best Professional Judgment (BPJ) in accordance with 40 CFR 125.3. A detailed discussion of the technology-based effluent limitations development is included in the Fact Sheet.

G. Water Quality-based Effluent Limitations (WQBELs). Section 301(b) of the CWA and 40 CFR 122.44(d) require that permits include limitations more stringent than

applicable federal technology-based requirements where necessary to achieve applicable water quality standards. This Order contains requirements, expressed as technology equivalence requirements, which are necessary to achieve water quality standards. The Central Valley Water Board has considered the factors listed in CWC section 13241 in establishing these requirements. The rationale for these requirements, which consist of tertiary treatment or equivalent requirements, is discussed in the Fact Sheet.

40 CFR 122.44(d)(1)(i) mandates that permits include effluent limitations for all pollutants that are or may be discharged at levels that have the reasonable potential to cause or contribute to an exceedance of a water quality standard, including numeric and narrative objectives within a standard. Where reasonable potential has been established for a pollutant, but there is no numeric criterion or objective for the pollutant, WQBELs must be established using: (1) USEPA criteria guidance under CWA section 304(a), supplemented where necessary by other relevant information; (2) an indicator parameter for the pollutant of concern; or (3) a calculated numeric water quality criterion, such as a proposed state criterion or policy interpreting the state's narrative criterion, supplemented with other relevant information, as provided in 40 CFR 122.44(d)(1)(vi).

H. Water Quality Control Plans. The Central Valley Water Board adopted a *Water Quality Control Plan for the Sacramento River and San Joaquin River Basins*, Fourth Edition,revised September 2009 (hereinafter Basin Plan) that designates beneficial uses, establishes water quality objectives, and contains implementation programs and policies to achieve those objectives for all waters addressed through the plan. The Basin Plan implements the State and federal antidegradation policies. As stated in Finding N below, the State Water Resources Control Board (State Water Board) established California's antidegradation policy in State Water Board Resolution No. 68-16, which incorporates the federal antidegradation policy where the federal policy applies under federal law. The federal antidegradation policy, 40 CFR 131.12, initially adopted in 1975, requires that existing uses be maintained and protected. Furthermore, the Basin Plan implements State Water Board Resolution No. 88-63, which established state policy that all waters, with certain exceptions, should be considered suitable or potentially suitable for municipal or domestic supply.

Beneficial uses applicable to Peck/Atwater Drain are carried over from Order No. R5-2007-0063 (NPDES Permit No. CA0079197) and are listed in Table 5 below. A detailed discussion of how the beneficial uses were established is included in Section IV.C.2.a of the Fact Sheet (Attachment F).

Groundwater underlying the Facility and the discharge point is in the El Nido-Stevinson Detailed Analysis Unit (DAU) No. 212. The beneficial uses of groundwater for this DAU are designated in the Basin Plan and listed in Table 5 below.

Table 5. Basin Plan Beneficial Uses

Discharge Point	Receiving Water Name	Beneficial Use(s)
001	Peck/Atwater Drain	Municipal and domestic supply (MUN); agricultural supply (AGR); water contact recreation (REC-1); warm freshwater habitat (WARM); wildlife habitat (WILD); and groundwater recharge (GWR)
--	Groundwater	MUN, AGR, industrial service supply (IND), industrial process supply (PRO)

The Basin Plan includes a list of Water Quality Limited Segments (WQLSs), which are defined as "…*those sections of lakes, streams, rivers or other fresh water bodies where water quality does not meet (or is not expected to meet) water quality standards even after the application of appropriate limitations for point sources (40 CFR 130, et seq.)*." The Basin Plan also states, "*Additional treatment beyond minimum federal standards will be imposed on dischargers to WQLSs. Dischargers will be assigned or allocated a maximum allowable load of critical pollutants so that water quality objectives can be met in the segment.*" Peck/Atwater Drain is not listed as a WQLS, but portions of the San Joaquin River between Bear Creek and the mouth of the Merced River are listed as WQLSs forarsenic, boron, chlorpyrifos, DDT, diazinon, EC, E. coli, Group A pesticides, mercury, selenium, andtoxicity in the 2008-2010 303(d) List of Water Quality Limited Segments. Effluent monitoring requirements for these constituents, except E. coli, are included in this Order, and an effluent limitation for EC is also included. This Order requires the Discharger to monitor the effluent for total coliform and includes effluent limitations.

Requirements of this Order implement the Basin Plan.

I. National Toxics Rule (NTR) and California Toxics Rule (CTR).USEPA adopted the NTR on 22 December 1992 and later amended it on 4 May 1995 and 9 November 1999. About 40 criteria in the NTR applied in California. On 18 May 2000, USEPA adopted the CTR. The CTR promulgated new toxics criteria for California and, in addition, incorporated the previously adopted NTR criteria that were applicable in the State. The CTR was amended on 13 February 2001. These rules contain water quality criteria for priority pollutants.

J. State Implementation Policy. On 2 March 2000, the State Water Board adopted the *Policy for Implementation of Toxics Standards for Inland Surface Waters, Enclosed Bays, and Estuaries of California* (State Implementation Policy or SIP). The SIP became effective on 28 April 2000 with respect to the priority pollutant criteria promulgated for California by USEPA through the NTR and to the priority pollutant objectives established by the Central Valley Water Board in the Basin Plan. The SIP became effective on 18 May 2000 with respect to the priority pollutant criteria promulgated by USEPA through the CTR. The State Water Board adopted amendments to the SIP on 24 February 2005 that became effective on 13 July 2005. The SIP establishes implementation provisions for priority pollutant criteria and objectives and provisions for chronic toxicity control. Requirements of this Order implement the SIP.

K. Compliance Schedules and Interim Requirements – Not Applicable

L. Alaska Rule. On 30 March 2000, USEPA revised its regulation that specifies when new and revised state and tribal water quality standards become effective for CWA purposes. (40 CFR 131.21 and 65 FR 24641 (27 April 2000)) Under the revised regulation (also known as the Alaska rule), new and revised standards submitted to USEPA after 30 May 2000, must be approved by USEPA before being used for CWA purposes. The final rule also provides that standards already in effect and submitted to USEPA by 30 May 2000 may be used for CWA purposes, whether or not approved by USEPA.

M. Stringency of Requirements for Individual Pollutants. This Order contains both technology-based effluent limitations and WQBELs for individual pollutants. The technology-based effluent limitations consist of restrictions on flow. The WQBELs consist of restrictions on5-day biochemical oxygen demand (BOD_5), total suspended solids (TSS), $BOD_5$and TSS percent removal, pH,copper, lead, zinc, ammonia,nitrate plus nitrite (as N), acute whole effluent toxicity, total residual chlorine, and total coliform. This Order includes a performance-based effluent limitation for EC. This Order's technology-based pollutant restrictions implement the minimum, applicable federal technology-based requirements. The rationale for including these limitations is explained in the Fact Sheet. In addition, the Central Valley Water Board has previously considered the factors in CWC section 13241 in establishing these requirements.

WQBELs have been scientifically derived to implement water quality objectives that protect beneficial uses. Both the beneficial uses and the water quality objectives have been approved pursuant to federal law and are the applicable federal water quality standards. To the extent that toxic pollutant WQBELs were derived from the CTR, the CTR is the applicable standard pursuant to 40 CFR 131.38. The scientific procedures for calculating the individual WQBELs for priority pollutants are based on the CTR-SIP, which was approved by USEPA on 18 May 2000. All beneficial uses and water quality objectives contained in the Basin Plan were approved under state law and submitted to and approved by USEPA prior to 30 May 2000. Any water quality objectives and beneficial uses submitted to USEPA prior to 30 May 2000, but not approved by USEPA before that date, are nonetheless "*applicable water quality standard[s] for purposes of the [Clean Water] Act*" pursuant to 40 CFR 131.21(c)(1). Collectively, this Order's restrictions on individual pollutants are no more stringent than required to implement the technology-based requirements of the CWA and the applicable water quality standards for purposes of the CWA.

N. Antidegradation Policy. 40 CFR 131.12 requires that the state water quality standards include an antidegradation policy consistent with the federal policy. The State Water Board established California's antidegradation policy in State Water Board Resolution No. 68-16. Resolution No. 68-16 incorporates the federal antidegradation policy where the federal policy applies under federal law. Resolution No. 68-16 requires that existing quality of waters be maintained unless degradation is justified based on specific findings. The Central Valley Water Board's Basin Plan implements, and incorporates by reference, both the state and federal antidegradation policies. As discussed in detail in the Fact Sheet, the permitted discharge is consistent with the antidegradation provision of 40 CFR 131.12 and Resolution No. 68-16.

O. Anti-Backsliding Requirements. Sections 303(d)(4) and 402(o)(2) of the CWA and federal regulations at 40 CFR 122.44(l) prohibit backsliding in NPDES permits. As this Order permits a new discharge (i.e., not a reissued permit), anti-backsliding provisions do not apply.

P. Endangered Species Act. This Order does not authorize any act that results in the taking of a threatened or endangered species or any act that is now prohibited, or becomes prohibited in the future, under either the California Endangered Species Act (Fish and Game Code sections 2050 to 2097) or the Federal Endangered Species Act (16 U.S.C.A. sections 1531 to 1544). This Order requires compliance with effluent limitations, receiving water limitations, and other requirements to protect the beneficial uses of waters of the state. The discharger is responsible for meeting all requirements of the applicable Endangered Species Act.

Q. Monitoring and Reporting. 40 CFR 122.48 requires that all NPDES permits specify requirements for recording and reporting monitoring results. CWC sections 13267 and 13383 authorize the Central Valley Water Board to require technical and monitoring reports. The Monitoring and Reporting Program establishes monitoring and reporting requirements to implement federal and State requirements. The Monitoring and Reporting Program is provided in Attachment E.

R. Standard and Special Provisions. Standard Provisions, which apply to all NPDES permits in accordance with 40 CFR 122.41, and additional conditions applicable to specified categories of permits in accordance with 40 CFR 122.42, are provided in Attachment D. The Discharger must comply with all standard provisions and with those additional conditions that are applicable under 40 CFR 122.42. The Central Valley Water Board has also included in this Order special provisions applicable to the Discharger. A rationale for the special provisions contained in this Order is provided in the Fact Sheet (Attachment F).

S. Provisions and Requirements Implementing State Law. The provisions/requirements in sections V.Band portions of VI.C. of this Order are included to implement State law only. These provisions/requirements are not required or authorized under the federal CWA; consequently, violations of these provisions/requirements are not subject to the enforcement remedies that are available for NPDES violations.

T. Notification of Interested Parties. The Central Valley Water Board has notified the Discharger and interested agencies and persons of its intent to prescribe WDRs for the discharge and has provided them with an opportunity to submit their written comments and recommendations. Details of notification are provided in the Fact Sheet of this Order.

U. Consideration of Public Comment. The Central Valley Water Board, in a public meeting, heard and considered all comments pertaining to the discharge. Details of the Public Hearing are provided in the Fact Sheet.

THEREFORE, IT IS HEREBY ORDERED, that in order to meet the provisions contained in division 7 of the CWC (commencing with section 13000) and regulations adopted thereunder and the provisions of the federal CWA and regulations and guidelines adopted thereunder, the Discharger shall comply with the requirements in this Order.

III. DISCHARGE PROHIBITIONS

A. Discharge of wastewater at a location or in a manner different from that described in the Findings is prohibited.

B. The by-pass or overflow of wastes to surface waters and/or groundwater is prohibited, except as allowed by Federal Standard Provisions I.G. and I.H. (Attachment D).

C. Neither the discharge nor its treatment shall create a condition of pollution or nuisance as defined in section 13050 of the CWC.

D. The Discharger shall not allow pollutant-free wastewater to be discharged into the treatment or disposal system in amounts that significantly diminish the system's capability to comply with this Order. Pollutant-free wastewater means rainfall, groundwater, cooling waters, and condensates that are essentially free of pollutants.

E. Discharge of waste classified as 'hazardous' as defined in Title 23, California Code of Regulations (CCR), Section 2521(a), et seq., or 'designated', as defined in Section 13173 of the CWC, is prohibited.

IV. EFFLUENT LIMITATIONS AND DISCHARGE SPECIFICATIONS

A. Effluent Limitations – Discharge Point 001

1. Final Effluent Limitations – Discharge Point 001

The Discharger shall maintain compliance with the following effluent limitations at Discharge Point 001, with compliance measured at Monitoring Location EFF-001 as described in the Monitoring and Reporting Program:

a. The effluent limitations specified in Table 6:

Table 6. Effluent Limitations

Parameter	Units	Effluent Limitations				
		Average Monthly	Average Weekly	Maximum Daily	Instantaneous Minimum	Instantaneous Maximum
Biochemical Oxygen Demand 5-day @ 20°C	mg/L	10	15	20	--	--
	lbs/day	500[1]	750[1]	1000[1]	--	--
Total Suspended Solids	mg/L	10	15	20	--	--
	lbs/day	500[1]	750[1]	1000[1]	--	--
pH	standard units	--	--	--	6.5	8.2
Copper, Total Recoverable	µg/L	3.8	--	7.6	--	--
Lead, Total Recoverable	µg/L	0.98	--	2.0	--	--

Parameter	Units	Effluent Limitations				
		Average Monthly	Average Weekly	Maximum Daily	Instantaneous Minimum	Instantaneous Maximum
Zinc, Total Recoverable	µg/L	34	--	69	--	--
Ammonia Nitrogen, Total (as N)	mg/L	2.1	--	5.5	--	--
Electrical Conductivity @ 25°C	µmhos/cm	700	--	--	--	--
Nitrateplus Nitrite(as N)	mg/L	10.0	--	--	--	--

[1] Based upon a design flow of 6.0 mgd.

b. Average Dry Weather Flow. The average dry weather daily discharge flow shall not exceed 6.0 mgd.

c. Percent Removal. The average monthly percent removal of 5-day biochemical oxygen demand (BOD_5) and total suspended solids (TSS) shall not be less than 90 percent.

d. Total Residual Chlorine. Effluent total residual chlorine shall not exceed:

i. 0.011 mg/L, as a 4-day average; nor
ii. 0.019 mg/L, as a 1-hour average.

e. Total Coliform. Effluent total coliform shall not exceed:

i. 2.2 most probable number (MPN) per 100 mL, as a 7-day median;
ii. 23 MPN/100 mL, more than once in any 30-day period; nor
iii. 240 MPN/100 mL, instantaneous maximum.

f. Acute Whole Effluent Toxicity. Survival of aquatic organisms in 96-hour bioassays of undiluted waste shall be no less than:

i. Minimum for any one bioassay ---------- 70%
ii. Median for any three consecutive bioassays ---------- 90%

2. Interim Effluent Limitations – Not Applicable

B. Land Discharge Specifications – Not Applicable

C. Reclamation Specifications – Not Applicable

V. RECEIVING WATER LIMITATIONS

A. Surface Water Limitations

Receiving water limitations are based on water quality objectives contained in the Basin Plan and are a required part of this Order. The discharge shall not cause the following in Peck/Atwater Drain:

1. **Bacteria.** The fecal coliform concentration, based on a minimum of not less than five samples for any 30-day period, to exceed a geometric mean of 200 MPN/100 mL, nor more than ten percent of the total number of fecal coliform samples taken during any 30-day period to exceed 400 MPN/100 mL.

2. **Biostimulatory Substances.** Water to contain biostimulatory substances which promote aquatic growths in concentrations that cause nuisance or adversely affect beneficial uses.

3. **Chemical Constituents.** Chemical constituents to be present in concentrations that adversely affect beneficial uses.

4. **Color.** Discoloration that causes nuisance or adversely affects beneficial uses.

5. **Dissolved Oxygen:**

   a. The monthly median of the mean daily dissolved oxygen concentration to fall below 85 percent of saturation in the main water mass;

   b. The 95 percentile dissolved oxygen concentration to fall below 75 percent of saturation; nor

   c. The dissolved oxygen concentration to be reduced below 5.0mg/L at any time.

6. **Floating Material.**Floating material to be present in amounts that cause nuisance or adversely affect beneficial uses.

7. **Oil and Grease.**Oils, greases, waxes, or other materials to be present in concentrations that cause nuisance, result in a visible film or coating on the surface of the water or on objects in the water, or otherwise adversely affect beneficial uses.

8. **pH.**The pH to be depressed below 6.5 nor raised above 8.5.

9. **Pesticides:**

   a. Pesticides to be present, individually or in combination, in concentrations that adversely affect beneficial uses;

   b. Pesticides to be present in bottom sediments or aquatic life in concentrations that adversely affect beneficial uses;

   c. Total identifiable persistent chlorinated hydrocarbon pesticides to be present in the water column at concentrations detectable within the accuracy of analytical methods approved by USEPA or the Executive Officer;

   d. Pesticide concentrations to exceed those allowable by applicable antidegradation policies (see State Water Board Resolution No. 68-16 and 40 CFR 131.12.);

e. Pesticide concentrations to exceed the lowest levels technically and economically achievable;

f. Pesticides to be present in concentrations in excess of the maximum contaminant levels (MCLs) set forth in Title 22, CCR, division 4, chapter 15; nor

g. Thiobencarb to be present in excess of 1.0 µg/L.

10. Radioactivity:

a. Radionuclides to be present in concentrations that are harmful to human, plant, animal, or aquatic life nor that result in the accumulation of radionuclides in the food web to an extent that presents a hazard to human, plant, animal, or aquatic life.

b. Radionuclides to be present in excess of the MCLs specified in Title 22, CCR, Sections 64442 and 64443.

11. Settleable Material. Substances to be present in concentrations that result in the deposition of material that causes nuisance or adversely affects beneficial uses.

12. Suspended Material. Suspended material to be present in concentrations that cause nuisance or adversely affect beneficial uses.

13. Suspended Sediments. The suspended sediment load and suspended sediment discharge rate of surface waters to be altered in such a manner as to cause nuisance or adversely affect beneficial uses.

14. Taste and Odors. Taste- or odor-producing substances to be present in concentrations that impart undesirable tastes or odors to fish flesh or other edible products of aquatic origin, or that cause nuisance, or otherwise adversely affect beneficial uses.

15. Temperature. The temperature, as measured at RSW-003, to be raised as follows:

a. Above 90°Ffor the months of June, July, August, and September;

b. Above 85°F for the months of April, May, and October;

c. Above 80°F for the month of November; nor

d. Above 77°F for the months of December, January, February, and March.

16. Toxicity. Toxic substances to be present, individually or in combination, in concentrations that produce detrimental physiological responses in human, plant, animal, or aquatic life.

17. Turbidity.

a. Shall not exceed 2 Nephelometric Turbidity Units (NTU) where natural turbidity is less than 1 NTU;

b. Shall not increase more than 1 NTU where natural turbidity is between 1 and 5 NTUs;

c. Shall not increase more than 20 percent where natural turbidity is between 5 and 50 NTUs;

d. Shall not increase more than 10 NTU where natural turbidity is between 50 and 100 NTUs; and

e. Shall not increase more than 10 percent where natural turbidity is greater than 100 NTUs.

B. Groundwater Limitations

1. Release of waste constituents from any storage, treatment, or disposal component associated with the Facility shall not cause the following in groundwater:

a. Constituent concentrations to exceed the concentrations specified below or natural background quality, whichever is greater:

i. Nitrate (as N) of 10 mg/L.

ii. The most probable number of total coliform organisms of 2.2 per 100 mL.

iii. Concentrations identified in Title 22, CCR for the Primary and Secondary MCLs.

b. Taste- or odor-producing constituents, toxic substances, or any other constituents to be present in concentrations that cause nuisance or adversely affect beneficial uses.

VI. PROVISIONS

A. Standard Provisions

1. The Discharger shall comply with all (federal NPDES standard conditions from 40 CFR 122) Standard Provisions included in Attachment D of this Order.

2. The Discharger shall comply with the following provisions:

a. If the Discharger's wastewater treatment plant is publicly owned or subject to regulation by California Public Utilities Commission, it shall be supervised and operated by persons possessing certificates of appropriate grade according to Title 23, CCR, division 3, chapter 26.

b. After notice and opportunity for a hearing, this Order may be terminated or modified for cause, including, but not limited to:

i. violation of any term or condition contained in this Order;

ii. obtaining this Order by misrepresentation or by failing to disclose fully all relevant facts;

iii. a change in any condition that requires either a temporary or permanent reduction or elimination of the authorized discharge; and

iv. a material change in the character, location, or volume of discharge.

The causes for modification include:

- *New regulations.* New regulations have been promulgated under section 405(d) of the CWA, or the standards or regulations on which the permit was based have been changed by promulgation of amended standards or regulations or by judicial decision after the permit was issued.

- *Land application plans.* When required by a permit condition to incorporate a land application plan for beneficial reuse of sewage sludge, to revise an existing land application plan, or to add a land application plan.

- *Change in sludge use or disposal practice.* Under 40 CFR 122.62(a)(1), a change in the Discharger's sludge use or disposal practice is a cause for modification of the permit. It is cause for revocation and reissuance if the Discharger requests or agrees.

The Central Valley Water Board may review and revise this Order at any time upon application of any affected person or the Central Valley Water Board's own motion.

c. If a toxic effluent standard or prohibition (including any scheduled compliance specified in such effluent standard or prohibition) is established under section 307(a) of the CWA, or amendments thereto, for a toxic pollutant that is present in the discharge authorized herein, and such standard or prohibition is more stringent than any limitation upon such pollutant in this Order, the Central Valley Water Board will revise or modify this Order in accordance with such toxic effluent standard or prohibition.

The Discharger shall comply with effluent standards and prohibitions within the time provided in the regulations that establish those standards or prohibitions, even if this Order has not yet been modified.

d. This Order shall be modified, or alternately revoked and reissued, to comply with any applicable effluent standard or limitation issued or approved under sections 301(b)(2)(C) and (D), 304(b)(2), and 307(a)(2) of the CWA, if the effluent standard or limitation so issued or approved:

i. Contains different conditions or is otherwise more stringent than any effluent limitation in the Order; or

ii. Controls any pollutant limited in the Order.

The Order, as modified or reissued under this paragraph, shall also contain any other requirements of the CWA then applicable.

e. The provisions of this Order are severable. If any provision of this Order is found invalid, the remainder of this Order shall not be affected.

f. The Discharger shall take all reasonable steps to minimize any adverse effects to waters of the State or users of those waters resulting from any discharge or sludge use or disposal in violation of this Order. Reasonable steps shall include such accelerated or additional monitoring as necessary to determine the nature and impact of the non-complying discharge or sludge use or disposal.

g. The Discharger shall ensure compliance with any existing or future pretreatment standard promulgated by USEPA under section 307 of the CWA, or amendment thereto, for any discharge to the municipal system.

h. A copy of this Order shall be maintained at the discharge Facility and be available at all times to operating personnel. Key operating personnel shall be familiar with its content.

i. Safeguard to electric power failure:

i. The Discharger shall provide safeguards to assure that, should there be reduction, loss, or failure of electric power, the discharge shall comply with the terms and conditions of this Order.

ii. Upon written request by the Central Valley Water Board, the Discharger shall submit a written description of safeguards. Such safeguards may include alternate power sources, standby generators, retention capacity, operating procedures, or other means. A description of the safeguards provided shall include an analysis of the frequency, duration, and impact of power failures experienced over the past 5 years on effluent quality and on the capability of the Discharger to comply with the terms and conditions of the Order. The adequacy of the safeguards is subject to the approval of the Central Valley Water Board.

iii. Should the treatment works not include safeguards against reduction, loss, or failure of electric power, or should the Central Valley Water Board not approve the existing safeguards, the Discharger shall, within 90 days of having been advised in writing by the Central Valley Water Board that the existing safeguards are inadequate, provide to the Central Valley Water Board and USEPA a schedule of compliance for providing safeguards such that in the event of reduction, loss, or failure of electric power, the Discharger

shall comply with the terms and conditions of this Order. The schedule of compliance shall, upon approval of the Central Valley Water Board, become a condition of this Order.

j. The Discharger, upon written request of the Central Valley Water Board, shall file with the Board a technical report on its preventive (failsafe) and contingency (cleanup) plans for controlling accidental discharges, and for minimizing the effect of such events. This report may be combined with that required under Central Valley Water Board Standard Provision contained in section VI.A.2.i. of this Order.

The technical report shall:

i. Identify the possible sources of spills, leaks, untreated waste by-pass, and contaminated drainage. Loading and storage areas, power outage, waste treatment unit outage, and failure of process equipment, tanks and pipes should be considered.

ii. Evaluate the effectiveness of present facilities and procedures and state when they became operational.

iii. Predict the effectiveness of the proposed facilities and procedures and provide an implementation schedule containing interim and final dates when they will be constructed, implemented, or operational.

The Central Valley Water Board, after review of the technical report, may establish conditions which it deems necessary to control accidental discharges and to minimize the effects of such events. Such conditions shall be incorporated as part of this Order, upon notice to the Discharger.

k. A publicly owned treatment works whose waste flow has been increasing, or is projected to increase, shall estimate when flows will reach hydraulic and treatment capacities of its treatment and disposal facilities. The projections shall be made in January, based on the last 3 years' average dry weather flows, peak wet weather flows and total annual flows, as appropriate. When any projection shows that capacity of any part of the facilities may be exceeded in 4 years, the Discharger shall notify the Central Valley Water Board by 31 January. A copy of the notification shall be sent to appropriate local elected officials, local permitting agencies, and the press. Within 120 days of the notification, the Discharger shall submit a technical report showing how it will prevent flow volumes from exceeding capacity or how it will increase capacity to handle the larger flows. The Central Valley Water Board may extend the time for submitting the report.

l. The Discharger shall submit technical reports as directed by the Executive Officer. All technical reports required herein that involve planning, investigation, evaluation, or design, or other work requiring interpretation and proper application of engineering or geologic sciences, shall be prepared by or under the direction of persons registered to practice in California pursuant to California

Business and Professions Code, sections 6735, 7835, and 7835.1. To demonstrate compliance with Title 16, CCR, Sections 415 and 3065, all technical reports must contain a statement of the qualifications of the responsible registered professional(s). As required by these laws, completed technical reports must bear the signature(s) and seal(s) of the registered professional(s) in a manner such that all work can be clearly attributed to the professional responsible for the work.

m. The Central Valley Water Board is authorized to enforce the terms of this permit under several provisions of the CWC, including, but not limited to, sections 13268, 13350, 13385, 13386, and 13387.

n. For publicly owned treatment works, prior to making any change in the point of discharge, place of use, or purpose of use of treated wastewater that results in a decrease of flow in any portion of a watercourse, the Discharger must file a petition with the State Water Board, Division of Water Rights, and receive approval for such a change. (CWC section 1211).

o. In the event the Discharger does not comply or will be unable to comply for any reason, with any prohibition, instantaneous minimum effluent limitation, instantaneous maximum effluent limitation, maximum daily effluent limitation, 1-hour average effluent limitation, acute toxicity effluent limitation, or receiving water limitation contained in this Order, the Discharger shall notify the Central Valley Water Board by telephone at (559) 445-5116 within 24 hours of having knowledge of such noncompliance, and shall confirm this notification in writing within 5 days, unless the Central Valley Water Board waives confirmation. The written notification shall include the information required by the Standard Provision contained in Attachment D, section V.E.1. [40 CFR 122.41(l)(6)(i)].

p. Failure to comply with provisions or requirements of this Order, or violation of other applicable laws or regulations governing discharges from this Facility, may subject the Discharger to administrative or civil liabilities, criminal penalties, and/or other enforcement remedies to ensure compliance. Additionally, certain violations may subject the Discharger to civil or criminal enforcement from appropriate local, state, or federal law enforcement entities.

q. In the event of any change in control or ownership of land or waste discharge facilities presently owned or controlled by the Discharger, the Discharger shall notify the succeeding owner or operator of the existence of this Order by letter, a copy of which shall be immediately forwarded to the Central Valley Water Board.

To assume operation under this Order, the succeeding owner or operator must apply in writing to the Executive Officer requesting transfer of the Order. The request must contain the requesting entity's full legal name, the state of incorporation if a corporation, address and telephone number of the persons responsible for contact with the Central Valley Water Board and a statement. The statement shall comply with the signatory and certification requirements in the federal Standard Provisions (Attachment D, section V.B) and state that the

new owner or operator assumes full responsibility for compliance with this Order. Failure to submit the request shall be considered a discharge without requirements, a violation of the CWC. Transfer shall be approved or disapproved in writing by the Executive Officer.

B. Monitoring and Reporting Program Requirements

The Discharger shall comply with the Monitoring and Reporting Program, and future revisions thereto, in Attachment E of this Order.

C. Special Provisions

1. Reopener Provisions

a. This Order may be reopened to address conditions that necessitate a major modification of a permit,as described in 40 CFR 122.62, including, but not limited to:

i. If new or amended applicable water quality standards are promulgated or approved pursuant to section 303 of the CWA, or amendments thereto, this permit may be reopened and modified in accordance with the new or amended standards.

ii. When new information, that was not available at the time of permit issuance, would have justified different permit conditions at the time of issuance.

b. This Order may be reopened for modification, or revocation and reissuance, as a result of the detection of a reportable priority pollutant generated by special conditions included in this Order. These special conditions may be, but are not limited to, fish tissue sampling, whole effluent toxicity, monitoring requirements on internal waste stream(s), and monitoring for surrogate parameters. Additional requirements may be included in this Order as a result of the special condition monitoring data.

c. Whole Effluent Toxicity. As a result of a Toxicity Reduction Evaluation (TRE), this Order may be reopened to include a chronic toxicity effluent limitation, a new acute toxicity effluent limitation, and/or a limitation for a specific toxicant identified in the TRE. Additionally, if the State Water Board revises the SIP's toxicity control provisions that would require the establishment of numeric chronic toxicity effluent limitations, this Order may be reopened to include a numeric chronic toxicity effluent limitation based on the new provisions.

d. Water Effects Ratios (WER) and Metal Translators.A default WER of 1.0 has been used in this Order for calculating CTR criteria for applicable priority pollutant inorganic constituents. In addition, default dissolved-to-total metal translators have been used to convert water quality objectives from dissolved to total recoverable when developing effluent limitations forcopper, lead, and zinc. If the Discharger performs studies to determine site-specific WERs and/or site-

specific dissolved-to-total metal translators, this Order may be reopened to modify the effluent limitations for the applicable inorganic constituents.

e. **Disinfection Byproducts Study.**If after review of the results of the study required under Provision VI.C.2.c. it is determined that the discharge has reasonable potential to cause or contribute to an exceedance of water quality objectives, this Order may be reopened and effluent limitations added for disinfection byproducts.

2. Special Studies, Technical Reports and Additional Monitoring Requirements

a. **Chronic Whole Effluent Toxicity.** For compliance with the Basin Plan's narrative toxicity objective, this Order requires the Discharger to conduct chronic whole effluent toxicity (WET) testing, as specified in the Monitoring and Reporting Program (Attachment E, section V). Furthermore, this Provision requires the Discharger to investigate the causes of, and identify corrective actions to reduce or eliminate effluent toxicity. If the discharge exhibits toxicity, as described in subsection ii below, the Discharger is required to initiate a TRE in accordance with an approved TRE workplan and take actions to mitigate the impact of the discharge and prevent recurrence of toxicity. A TRE is a site-specific study conducted in a stepwise process to identify the source(s) of toxicity and the effective control measures for effluent toxicity. TREs are designed to identify the causative agents and sources of effluent toxicity, evaluate the effectiveness of the toxicity control options, and confirm the reduction in effluent toxicity. This Provision includes requirements for the Discharger to develop and submit a TRE workplan and includes procedures for accelerated chronic toxicity monitoring and TRE initiation.

i. **Initial Investigative TRE Work Plan.**By**<90 days from the effective date of this Order>**, the Discharger shall submit to the Central Valley Water Board an Initial Investigative TRE Work Plan for approval by the Executive Officer. This should be a one to two page document including, at a minimum:

(a) A description of the investigation and evaluation techniques that will be used to identify potential causes and sources of effluent toxicity, effluent variability, and treatment system efficiency;

(b) A description of the Discharger's methods of maximizing in-house treatment efficiency and good housekeeping practices, and a list of all chemicals used in operation of the Facility; and

(c) A discussion of who will conduct the Toxicity Identification Evaluation (TIE), if necessary (e.g., an in-house expert or outside contractor).

ii. **Accelerated Monitoring and TRE Initiation.** When the numeric toxicity monitoring trigger is exceeded during regular chronic toxicity monitoring, the Discharger shall initiate accelerated monitoring as required in the Accelerated Monitoring Specifications. The Discharger shall initiate a TRE to address

effluent toxicity if any WET testing results exceed the numeric toxicity monitoring trigger during accelerated monitoring.

iii. Numeric Toxicity Monitoring Trigger. The numeric toxicity monitoring trigger to initiate a TRE is > 1 TU_C (where TU_C = 100/NOEC)(NOEC = No Observed Effect Concentration). The monitoring trigger is not an effluent limitation; it is the toxicity threshold at which the Discharger is required to begin accelerated monitoring and initiate a TRE when the effluent exhibits toxicity.

iv. Accelerated Monitoring Specifications. If the numeric toxicity monitoring trigger is exceeded during regular chronic toxicity testing, the Discharger shall initiate accelerated monitoring within 14 days of notification by the laboratory of the exceedance. Accelerated monitoring shall consist of four (4) chronic toxicity tests in a six-week period (i.e., one test every two weeks) using the species that exhibited toxicity. The following protocol shall be used for accelerated monitoring and TRE initiation:

(a) If the results of four (4) consecutive accelerated monitoring tests do not exceed the monitoring trigger, the Discharger may cease accelerated monitoring and resume regular chronic toxicity monitoring. However, notwithstanding the accelerated monitoring results, if there is adequate evidence of effluent toxicity, the Executive Officer may require that the Discharger initiate a TRE.

(b) If the source(s) of the toxicity is easily identified (e.g., temporary plant upset), the Discharger shall make necessary corrections to the Facility and shall continue accelerated monitoring until four (4) consecutive accelerated tests do not exceed the monitoring trigger. Upon confirmation that the effluent toxicity has been removed, the Discharger may cease accelerated monitoring and resume regular chronic toxicity monitoring.

(c) If the result of any accelerated toxicity test exceeds the monitoring trigger, the Discharger shall cease accelerated monitoring and begin a TRE to investigate the cause(s) of and identify corrective actions to reduce or eliminate effluent toxicity. Within **thirty (30) days** of notification by the laboratory of any test result exceeding the monitoring trigger during accelerated monitoring, the Discharger shall submit a TRE Action Plan to the Central Valley Water Board including, at minimum:

(1) Specific actions the Discharger will take to investigate and identify the cause(s) of toxicity, including a TRE WET monitoring schedule;

(2) Specific actions the Discharger will take to mitigate the impact of the discharge and prevent the recurrence of toxicity; and

(3) A schedule for these actions.

Within **sixty (60) days** of notification by the laboratory of the test results, the Discharger shall submit to the Central Valley Water Board a TRE Work Plan for approval by the Executive Officer. The TRE Work Plan shall outline the procedures for identifying the source(s) of, and reducing or eliminating effluent toxicity. The TRE Work Plan must be developed in accordance with USEPA guidance[1].

b. Post-Construction Report. At least 30 days prior to start-up, the Discharger shall submit a post-construction report certifying that the Facility was designed and constructed to operate in full compliance with the terms of this Order. The post construction report is subject to Provision VI.A.2.l. and shall clearly note any deviations from the Facility design from that described in the Findings above.

c. Disinfection Byproducts Study. The Discharger shall conduct a study to determine if disinfection byproducts are present in the tertiary treated effluent due to the use of chlorine for operation and maintenance purposes. The study shall include an evaluation of effluent disinfection byproduct levels during at least three operation and maintenance events that involve the use of chlorine in the treatment process. The Discharger shall comply with the following time schedule in conducting a study of these constituents' potential presence in the effluent:

Task	Compliance Date
i. Submit Monitoring Plan	**Within 60 days** following the start up of operations
ii. Complete Study	**Within 36 months** following the completion of Task i., or after a minimum of three maintenance events have occurred.
iii. Submit Study Report	**Within 6 months** following the completion of Task ii.

d. Chlorpyrifos and Diazinon. For compliance with the Basin Plan's objectives for chlorpyrifos and diazinon in the San Joaquin River, the Discharger must conduct effluent and receiving water monitoring as specified in the Monitoring and Reporting Program (Attachment E, Sections IV and VIII). Using the effluent monitoring data, the Discharger shall calculate the sum (S) of its waste load of chlorpyrifos and diazinon using the following equation:

$$S = \frac{C_D}{WQO_D} + \frac{C_C}{WQO_C}$$

Where:

C_D = effluent diazinon concentration in µg/L

[1] See the Fact Sheet (Attachment F, Section VII.B.2.a.) for a list of USEPA guidance documents that must be considered in development of the TRE Work Plan.

C_C = effluent chlorpyrifos concentration in µg/L
WQO_D = acute or chronic diazinon water quality objective in µg/L
WQO_C = acute or chronic chlorpyrifos water quality objective in µg/L

	Acute (1-hour average) Water Quality Objective	Chronic (4-day average) Water Quality Objective
Chlorpyrifos	0.025 µg/L Not to be exceeded more than once in a 3-year period	0.015 µg/L Not to be exceeded more than once in a 3-year period
Diazinon	0.16 µg/L Not to be exceeded more than once in a 3-year period	0.10 µg/L Not to be exceeded more than once in a 3-year period

For purposes of calculating the sum, effluent analytical results that are reported as “not detected” are considered to be zero.

The Discharger shall report its calculations, analysis, and conclusions to the Central Valley Water Board in a technical report accompanying its application for renewal of its permit (due 180 days prior to expiration of this Order). If the sum (S) of its waste load of chlorpyrifos and diazinon, either on an acute (1-hour average) or chronic (4-day average) basis, is equal to or exceeds 1.0 (i.e., reasonable potential to exceed the waste load allocation), then effluent limitations consistent with the Basin Planwill be included in the subsequent NPDES permit renewal.

3. Best Management Practices and Pollution Prevention

a. Salinity Evaluation and Minimization Plan. The Discharger shall prepare and implement a salinity evaluation and minimization plan to identify and address sources of salinity from the Facility. The plan shall be completed and submitted to the Central Valley Water Board **within 9 months following start up of operations** for approval by the Executive Officer. The Discharger shall submit an annual report evaluating the effectiveness of the plan in accordance with the Monitoring and Reporting Program (Attachment E, Section X.D.1).

4. Construction, Operation and Maintenance Specifications

a. The treatment facilities shall be designed, constructed, operated, and maintained to prevent inundation or washout due to floods with a 100-year return frequency.

b. Public contact with wastewater, sludge, biosolids, and other wastesat the Facility shall be precluded through such means as fences and signs, or other acceptable alternatives.

c. Objectionable odors originating from the Facility shall not be perceivable beyond the limits of the wastewater treatment and disposal areas (or property owned by the Discharger).

d. Turbidity Operational Requirements.

i. When coagulation is used, the Discharger shall operate the treatment system to ensure that the turbidity measured at INT-002, as described in the MRP (Attachment E), shall not exceed:

(a) 2 NTU, as a daily average;
(b) 5 NTU, more than 5 percent of the time within a 24-hour period; and
(c) 10 NTU, at any time.

ii. When coagulation is not used,the Discharger shall operate the treatment system to ensure:

(a) The turbidity of the influent to the filtration unit measured at INT-001 (see MRP, Attachment E) shall not exceed 5 NTU for more than 15 minutes and never exceed 10 NTU; and
(b) The effluent turbidity measured at INT-002 (see MRP, Attachment E) shall not exceed 2 NTU at any time.

e. Ultraviolet Light (UV) Disinfection System Operating Specifications. The Discharger shall operate the UV disinfection system to provide a minimum UV dose per channel of 100 millijoules per square centimeter (mJ/cm^2) at peak daily flow, unless otherwise approved by DPH, and shall maintain an adequate dose for disinfection while discharging to Peck/Atwater Drain, unless otherwise approved by DPH.

i. The Discharger shall provide continuous, reliable monitoring of flow, UV transmittance, UV intensity, UV dose, UV power, and turbidity.

ii. The Discharger shall operate the treatment system to ensure that turbidity prior to disinfection meets the Turbidity Operational Requirements specified in Section VI.C.4.d. of this Order.

iii. The UV transmittance (at 254 nanometers) in the wastewater exiting the UV disinfection system shall not fall below 55 percent of maximum at any time, unless otherwise approved by DPH.

iv. The quartz sleeves and cleaning system components shall be visually inspected per the manufacturer's operations manual for physical wear (scoring, solarization, seal leaks, cleaning fluid levels, etc.) and to check the efficacy of the cleaning system.

v. The quartz sleeves must be cleaned periodically, as necessary, to meet the requirements.

vi. Lamps must be replaced per the manufacturer's operations manual, or sooner, if there are indications the lamps are failing to provide adequate disinfection. Lamp age and lamp replacement records must be maintained.

vii. The Facility must be operated in accordance with an operations and maintenance plan that assures adequate disinfection.

f. Storm Water Retention Pond/Emergency Storage Basin Operating Requirements.

i. Any municipal wastewater directed to the Emergency Storage Basin shall be returned to the Facility for treatment as soon as possible.

ii. If there is potential for flooding in Bear Creek, wastewater must be removed from the Emergency Storage Basin prior to the onset of significant precipitation, and no wastewater may be directed to the Emergency Storage Basin for at least 24 hours after cessation of significant precipitation. Significant precipitation is defined as 0.25 inches during a 24-hour period.

iii. The pond shall be managed to prevent breeding of mosquitoes. In particular,

(a) An erosion control program should assure that small coves and irregularities are not created around the perimeter of the water surface.

(b) Weeds shall be minimized.

(c) Dead algae, vegetation, and debris shall not accumulate on the water surface.

(d) Vegetation management operations in areas that attract nesting birds shall be carried out either before or after, but not during, the 1 April to 30 June bird nesting season.

iv. Freeboard shall never be less than 2 feet measured vertically to the lowest point of overflow.

5. Special Provisions for Municipal Facilities (POTWs Only)

a. Pretreatment Requirements.

i. The Discharger shall continue to implement its pretreatment program that was approved by the Central Valley Water Board on 22 June 2007.

ii. The Discharger shall be responsible and liable for the performance of all Control Authority pretreatment requirements contained in 40 CFR Part 403, including any subsequent regulatory revisions to 40 CFR Part 403. Where 40 CFR Part 403 or subsequent revision places mandatory actions upon the Discharger as Control Authority but does not specify a timetable for completion of the actions, the Discharger shall complete the required actions within 6 months from the issuance date of this permit or the effective date of the 40 CFR Part 403 revisions, whichever comes later. For violations of pretreatment requirements, the Discharger shall be subject to enforcement

actions, penalties, fines, and other remedies by USEPA or other appropriate parties, as provided in the CWA.

iii. The Discharger shall enforce the requirements promulgated under sections 307(b), 307(c), 307(d), and 402(b) of the CWA with timely, appropriate, and effective enforcement actions. The Discharger shall cause all nondomestic users subject to federal categorical standards to achieve compliance no later than the date specified in those requirements or, in the case of a new nondomestic user, upon commencement of the discharge.

iv. The Discharger shall perform the pretreatment functions as required in 40 CFR Part 403 including, but not limited to:

(a) Implement the necessary legal authoritiesas provided in 40 CFR 403.8(f)(1);

(b) Enforce the pretreatment requirements under 40 CFR 403.5 and 403.6;

(c) Implementthe programmatic functions as provided in 40 CFR 403.8(f)(2); and

(d) Providethe requisite funding and personnel to implement the pretreatment program as provided in 40 CFR 403.8(f)(3).

v. The Discharger shall implement, as more completely set forth in 40 CFR 403.5, the necessary legal authorities, programs, and controls to ensure that the following incompatible wastes are not introduced to the treatment system, where incompatible wastes are:

(a) Wastes which create a fire or explosion hazard in the treatment works;

(b) Wastes which will cause corrosive structural damage to treatment works, but in no case wastes with a pH lower than 5.0, unless the works is specially designed to accommodate such wastes;

(c) Solid or viscous wastes in amounts which cause obstruction to flow in sewers, or which cause other interference with proper operation of the treatment works;

(d) Any waste, including oxygen demanding pollutants (BOD, etc.), released in such volume or strength as to cause inhibition or disruption in the treatment works, and subsequent treatment process upset and loss of treatment efficiency;

(e) Heat in amounts that inhibit or disrupt biological activity in the treatment works, or that raise influent temperatures above 40°C (104°F), unless the Central Valley Water Board approves alternate temperature limits;

(f) Petroleum oil, non-biodegradable cutting oil, or products of mineral oil origin in amounts that will cause interference or pass through;

(g) Pollutants which result in the presence of toxic gases, vapors, or fumes within the treatment works in a quantity that may cause acute worker health and safety problems; and

(h) Any trucked or hauled pollutants, except at points predesignated by the Discharger.

vi. The Discharger shall implement, as more completely set forth in 40 CFR 403.5, the legal authorities, programs, and controls necessary to ensure that indirect discharges do not introduce pollutants into the sewerage system that, either alone or in conjunction with a discharge or discharges from other sources:

(a) Flow through the system to the receiving water in quantities or concentrations that cause a violation of this Order, or

(b) Inhibit or disrupt treatment processes, treatment system operations, or sludge processes, use, or disposal and either cause a violation of this Order or prevent sludge use or disposal in accordance with this Order.

b. Sludge/Biosolids Treatment or Discharge Specifications. Sludge in this document means the solid, semisolid, and liquid residues removed during primary, secondary, or advanced wastewater treatment processes. Solid waste refers to grit and screening material generated during preliminary treatment. Residual sludge means sludge that will not be subject to further treatment at the wastewater treatment plant. Biosolids refer to sludge that has been treated and tested and shown to be capable of being beneficially and legally used pursuant to federal and state regulations as a soil amendment for agricultural, silvicultural, horticultural, and land reclamation activities as specified under 40 CFR Part 503.

i. Collected screenings, residual sludge, biosolids, and other solids removed from liquid wastes shall be disposed of in a manner approved by the Executive Officer, and consistent with *Consolidated Regulations for Treatment, Storage, Processing, or Disposal of Solid Waste*, as set forth in Title 27, CCR, Division 2, Subdivision 1, section 20005, et seq. Removal for further treatment, storage, disposal, or reuse at sites (e.g., landfill, composting sites, soil amendment sites) that are operated in accordance with valid waste discharge requirements issued by the State Water Board or a Regional Water Board will satisfy these specifications.

ii. Sludge and solid waste shall be removed from screens, sumps, ponds, clarifiers, etc. as needed to ensure proper plant performance.

iii. The treatment of sludge and the dewatering of residual sludge and/or biosolids generated at the Facility shall be confined to the Facility property

and conducted in a manner that precludes infiltration of waste constituents into soils in a mass or concentration that will violate Groundwater Limitations V.B. of this Order. In addition, the storage of residual sludge, solid waste, and biosolids on Facility property shall be temporary and controlled, and contained in a manner that minimizes leachate formation and precludes infiltration of waste constituents into soils in a mass or concentration that will violate Groundwater Limitations V.B. of this Order.

The use, disposal, storage, and transportation of biosolids shall comply with existing Federal and State laws and regulations, including permitting requirements and technical standards included in 40 CFRPart 503. If the State Water Board and the Central Valley Water Board are given the authority to implement regulations contained in 40 CFRPart 503, this Order may be reopened to incorporate appropriate time schedules and technical standards. The Discharger must comply with the standards and time schedules contained in 40 CFR Part 503 whether or not they have been incorporated into this Order.

(a) The Discharger shall comply with Section IX.A. of the Monitoring and Reporting Program, Attachment E.

(b) Any proposed change in biosolids use or disposal practice from a previously approved practice shall be reported to the Executive Officer and USEPA Regional Administrator at least **90 days** in advance of the change.

iv. By **<180 days following permit adoption>** and prior to use of sludge/biosolids dryingand storage facilities, the Discharger shall submit a sludge/biosolids drying, storage, and disposal plan for Executive Officer approval. The plan shall describe at a minimum:

(a) Sources and amounts of sludge/biosolids generated annually.

(b) Location(s) of onsite drying and storage areas and description of the containment area and containment features. The description shall include the Discharger's means of complying with Provisions V.B and VI.C.5.b.

(c) Plans for ultimate disposal. For landfill disposal, include the Regional Water Board's waste discharge requirements order number that regulates that particular landfill, the present classification of the landfill, and the name and location of the landfill.

c. Collection System. On 2 May 2006, the State Water Board adopted State Water Board Order No. 2006-0003-DWQ, Statewide General Waste Discharge Requirements for Sanitary Sewer Systems. The Discharger shall be subject to the requirements of Order No. 2006-0003-DWQ and any future revisions thereto. Order No. 2006-0003-DWQ requires that all public agencies that currently own or operate sanitary sewer systems apply for coverage under the general WDRs.

The Discharger has applied for and has been approved for coverage under Order No. 2006-0003-DWQ for operation of its wastewater collection system.

Regardless of the coverage obtained under Order No. 2006-0003-DWQ, the Discharger's collection system is part of the treatment system that is subject to this Order. As such, pursuant to federal regulations, the Discharger must properly operate and maintain its collection system [40 CFR 122.41(e)], report any non-compliance [40 CFR 122.41(l)(6) and (7)], and mitigate any discharge from the collection system in violation of this Order [40 CFR 122.41(d)].

d. Limited portions of the wastewater collection system may be outside the service area of the Discharger. In order to assure protection of the entire collection system and treatment works from industrial discharges, it is necessary that the Discharger control discharges into the system. To control discharges into the entire collection system, the Discharger shall establish interagency agreements with other agencies that discharge into the collection system by **<12 months following Order adoption>**. The interagency agreements shall contain, at a minimum, requirements for implementation of an industrial pretreatment program that meets the minimum requirements of this Order. The Discharger was notified through a Notice of Violation dated 6 August 2009 and a staff letter dated 8 October 2009 of what the interagency agreements must include.

e. This Order, and the Monitoring and Reporting Program which is a part of this Order, requires that certain parameters be monitored on a continuous basis. The Facility is not staffed on a full time basis. Permit violations or system upsets can go undetected during this period. The Discharger shall establish an electronic system for operator notification for continuous recording device alarms. For existing continuous monitoring systems, the electronic notification system shall be installed concurrent with start-up of operations. For systems installed following permit adoption, the notification system shall be installed simultaneously.

6. Other Special Provisions

a. CWC section 13385(j)(1)(D)(i) provides for a period of adjustment or testing for new facilities or facility components. Dischargers seeking relief from mandatory minimum penalties during their start-up period, up to the time allowed in the CWC section 13385(j)(1)(D)(i), may do so by complying with the requirements in the CWC sections 13385(j)(1)(D)(i)(I) through (V).

b. Wastewater shall be oxidized, coagulated, filtered, and adequately disinfected pursuant to the Department of Public Health (DPH; formerly the Department of Health Services) reclamation criteria, Title 22, CCR, Division 4, Chapter 3, (Title 22), or equivalent.

c. At least **7days** prior to initial discharge to Discharge Point 001, the Discharger shall provide to the Central Valley Water Board a copy of the agreement between the Discharger and Joseph Gallo Farms for discharges into Peck Drain. In

addition, the Discharger shall provide the Central Valley Water Board any revisions or amendments to the agreement **within 30 days** of the revisions or amendments becoming final.

7. Compliance Schedules – Not Applicable

VII. COMPLIANCE DETERMINATION

A. BOD_5 and TSS Effluent Limitations (Section IV.A.1.). Compliance with the final effluent limitations for BOD_5 and TSS required in Limitations and Discharge Requirements section IV.A.1.a. shall be ascertained by flow proportioned 24-hour composite samples. Compliance with effluent limitations required in Limitations and Discharge Requirements section IV.A.1.c. for percent removal shall be calculated using the arithmetic mean of BOD_5 and TSS in effluent samples collected over a monthly period as a percentage of the arithmetic mean of the values for influent samples collected at approximately the same times during the same period.

B. Average Dry Weather Flow Effluent Limitation (Section IV.A.1.b.). The average dry weather discharge flow represents the daily average flow when groundwater is at or near normal and runoff is not occurring. Compliance with the average dry weather flow effluent limitation will be determined once a month during three consecutive dry weather months (e.g., July, August, and September) and will be based on the average daily flow.

C. Total Coliform Effluent Limitations (Section IV.A.1.e.). For each day that an effluent sample is collected and analyzed for total coliform, the 7-day median shall be determined by calculating the median concentration of total coliform bacteria in the effluent utilizing the bacteriological results of the last 7 days in which a sample was collected. For example, if a sample is collected on a Wednesday, the result from that sampling event and all results from the previous 6 days (i.e., Tuesday, Monday, Sunday, Saturday, Friday, and Thursday) are used to calculate the 7-day median. If the 7-day median of total coliform exceeds a most probable number (MPN) of 2.2 per 100 milliliters, the Discharger will be considered out of compliance.

D. Mass Effluent Limitations. The mass effluent limitations contained in the Final Effluent Limitations IV.A.1.a. are based on the permitted average dry weather flow and calculated as follows:

$$\text{Mass (lbs/day)} = \text{Flow (MGD)} \times \text{Concentration (mg/L)} \times 8.34 \text{ (conversion factor)}$$

If the effluent flow exceeds the permitted average dry weather flow during wet-weather seasons, the effluent mass limitations contained in Final Effluent Limitations IV.A.1.a. shall not apply. If the effluent flow is below the permitted average dry weather flow during wet-weather seasons, the effluent mass limitations do apply.

E. Priority Pollutant Effluent Limitations. Compliance with effluent limitations for priority pollutants shall be determined using sample reporting protocols defined in Attachment A and Attachment E of this Order. For purposes of reporting and administrative enforcement by the Central Valley Water Board and the State Water Board, the

Discharger shall be deemed out of compliance with effluent limitations if the concentration of the priority pollutant in the monitoring sample is greater than the effluent limitation and greater than or equal to the reporting level (RL).

ATTACHMENT A – DEFINITIONS

Arithmetic Mean (μ)
Also called the average, is the sum of measured values divided by the number of samples. For ambient water concentrations, the arithmetic mean is calculated as follows:

Arithmetic mean = $\mu = \Sigma x / n$ where: Σx is the sum of the measured ambient water concentrations, and n is the number of samples.

Average Monthly Effluent Limitation (AMEL)
The highest allowable average of daily discharges over a calendar month, calculated as the sum of all daily discharges measured during a calendar month divided by the number of daily discharges measured during that month.

Average Weekly Effluent Limitation (AWEL)
The highest allowable average of daily discharges over a calendar week (Sunday through Saturday), calculated as the sum of all daily discharges measured during a calendar week divided by the number of daily discharges measured during that week.

Best Practicable Treatment or Control (BPTC)
BPTC is a requirement of State Water Resources Control Board Resolution No. 68-16 – "Statement of Policy with Respect to Maintaining High Quality of Waters in California" (referred to as the "Antidegradation Policy"). BPTC is the treatment or control of a discharge necessary to assure that "*(a) a pollution or nuisance will not occur and (b) the highest water quality consistent with maximum benefit to the people of the State will be maintained.*" Pollution is defined in CWC section 13050(l). In general, an exceedance of a water quality objective in the Basin Plan constitutes "pollution".

Bioaccumulative
Those substances taken up by an organism from its surrounding medium through gill membranes, epithelial tissue, or from food and subsequently concentrated and retained in the body of the organism.

Carcinogenic
Carcinogenic pollutants are substances that are known to cause cancer in living organisms.

Coefficient of Variation (CV)
CV is a measure of the data variability and is calculated as the estimated standard deviation divided by the arithmetic mean of the observed values.

Daily Discharge
Daily Discharge is defined as either: (1) the total mass of the constituent discharged over the calendar day (12:00 am through 11:59 pm) or any 24-hour period that reasonably represents a calendar day for purposes of sampling (as specified in the permit), for a constituent with limitations expressed in units of mass or; (2) the unweighted arithmetic mean measurement of the constituent over the day for a constituent with limitations expressed in other units of measurement (e.g., concentration).

The daily discharge may be determined by the analytical results of a composite sample taken over the course of 1 day (a calendar day or other 24-hour period defined as a day) or by the arithmetic mean of analytical results from one or more grab samples taken over the course of the day.

For composite sampling, if 1 day is defined as a 24-hour period other than a calendar day, the analytical result for the 24-hour period will be considered as the result for the calendar day in which the 24-hour period ends.

Detected, but Not Quantified (DNQ)
DNQ are those sample results less than the reporting limit (RL), but greater than or equal to the laboratory's method detection limit (MDL).

Dilution Credit
Dilution Creditis the amount of dilution granted to a discharge in the calculation of a water quality-based effluent limitation, based on the allowance of a specified mixing zone. It is calculated from the dilution ratio or determined through conducting a mixing zone study or modeling of the discharge and receiving water.

Effluent Concentration Allowance (ECA)
ECA is a value derived from the water quality criterion/objective, dilution credit, and ambient background concentration that is used, in conjunction with the coefficient of variation for the effluent monitoring data, to calculate a long-term average (LTA) discharge concentration. The ECA has the same meaning as waste load allocation (WLA) as used in USEPA guidance (*Technical Support Document For Water Quality-based Toxics Control*, March 1991, second printing, EPA/505/2-90-001).

Estimated Chemical Concentration
The estimated chemical concentration that results from the confirmed detection of the substance by the analytical method below the minimum level (ML) value. Same as Detected, but not Quantified.

Inland Surface Waters
All surface waters of the State that do not include the ocean, enclosed bays, or estuaries.

Instantaneous Maximum Effluent Limitation
The highest allowable value for any single grab sample or aliquot (i.e., each grab sample or aliquot is independently compared to the instantaneous maximum effluent limitation).

Instantaneous Minimum Effluent Limitation
The lowest allowable value for any single grab sample or aliquot (i.e., each grab sample or aliquot is independently compared to the instantaneous minimum effluent limitation).

LC50
The concentration of effluent that is lethal to 50% of the expressed test organisms, measured in a dilution series ranging from 100% effluent to 0% effluent.

Lowest Observed Effect Concentration (LOEC)
The lowest concentration of an effluent at which adverse effects are observed on the aquatic test organism.

Maximum Daily Effluent Limitation (MDEL)
The highest allowable daily discharge of a pollutant, over a calendar day (or 24-hour period). For pollutants with limitations expressed in units of mass, the dai7ly discharge is calculated as the total mass of the pollutant discharged over the day. For pollutants with limitations expressed in other units of measurement, the daily discharge is calculated as the arithmetic mean measurement of the pollutant over the day.

Median
The middle measurement in a set of data. The median of a set of data is found by first arranging the measurements in order of magnitude (either increasing or decreasing order). If the number of measurements (n) is odd, then the median = $X_{(n+1)/2}$. If n is even, then the median = $(X_{n/2} + X_{(n/2)+1})/2$ (i.e., the midpoint between the $n/2$ and $n/2+1$).

Method Detection Limit (MDL)
MDL is the minimum concentration of a substance that can be measured and reported with 99 percent confidence that the analyte concentration is greater than zero, as defined in 40 CFR 136, Appendix B.

Minimum Level (ML)
ML is the concentration at which the entire analytical system must give a recognizable signal and acceptable calibration point. The ML is the concentration in a sample that is equivalent to the concentration of the lowest calibration standard analyzed by a specific analytical procedure, assuming that all the method specified sample weights, volumes, and processing steps have been followed.

Mixing Zone
Mixing Zoneis a limited volume of receiving water that is allocated for mixing with a wastewater discharge where water quality criteria can be exceeded without causing adverse effects to the overall water body.

No Observed Effect Concentration (NOEC)
The highest concentration of toxicant to which organisms are exposed in a full life-cycle or partial life-cycle (short-term) test, that causes no observable adverse effects on the test organisms (i.e., the highest concentration of toxicant in which the values for the observed responses are not statistically significantly different from the controls).

Not Detected (ND)
Sample results which are less than the laboratory's MDL.

Persistent Pollutants
Persistent pollutants are substances for which degradation or decomposition in the environment is nonexistent or very slow.

Pollutant Minimization Program (PMP)
PMP means waste minimization and pollution prevention actions that include, but are not limited to, product substitution, waste stream recycling, alternative waste management methods, and education of the public and businesses. The goal of the PMP shall be to reduce all potential sources of a priority pollutant(s) through pollutant minimization (control) strategies, including pollution prevention measures as appropriate, to maintain the effluent concentration at or below the water quality-based effluent limitation. Pollution prevention measures may be particularly appropriate for persistent bioaccumulative priority pollutants where there is evidence that beneficial uses are being impacted. The Central Valley Water Board may consider cost effectiveness when establishing the requirements of a PMP. The completion and implementation of a Pollution Prevention Plan, if required pursuant to CWC section 13263.3(d), shall be considered to fulfill the PMP requirements.

Pollution Prevention
Pollution Preventionmeans any action that causes a net reduction in the use or generation of a hazardous substance or other pollutant that is discharged into water and includes, but is not limited to, input change, operational improvement, production process change, and product reformulation (as defined in CWC section 13263.3). Pollution prevention does not include actions that merely shift a pollutant in wastewater from one environmental medium to another environmental medium, unless clear environmental benefits of such an approach are identified to the satisfaction of the State or Central Valley Water Board.

Reporting Level (RL)
RL is the ML (and its associated analytical method) chosen by the Discharger for reporting and compliance determination from the MLs included in this Order. The MLs included in this Order correspond to approved analytical methods for reporting a sample result that are selected by the Central Valley Water Board either from Appendix 4 of the SIP in accordance with section 2.4.2 of the SIP or established in accordance with section 2.4.3 of the SIP. The ML is based on the proper application of method-based analytical procedures for sample preparation and the absence of any matrix interferences. Other factors may be applied to the ML depending on the specific sample preparation steps employed. For example, the treatment typically applied in cases where there are matrix-effects is to dilute the sample or sample aliquot by a factor of ten. In such cases, this additional factor must be applied to the ML in the computation of the RL.

Satellite Collection System
The portion, if any, of a sanitary sewer system owned or operated by a different public agency than the agency that owns and operates the wastewater treatment facility that a sanitary sewer system is tributary to.

Source of Drinking Water
Any water designated as municipal or domestic supply (MUN) in a Central Valley Water Board Basin Plan.

Standard Deviation (σ)

StandardDeviation is a measure of variability that is calculated as follows:

$$\sigma = (\Sigma[(x - \mu)^2]/(n - 1))^{0.5}$$

where:

x is the observed value;

μ is the arithmetic mean of the observed values; and

n is the number of samples.

Toxicity Reduction Evaluation (TRE)

TRE is a study conducted in a step-wise process designed to identify the causative agents of effluent or ambient toxicity, isolate the sources of toxicity, evaluate the effectiveness of toxicity control options, and then confirm the reduction in toxicity. The first steps of the TRE consist of the collection of data relevant to the toxicity, including additional toxicity testing, and an evaluation of facility operations and maintenance practices, and best management practices. A Toxicity Identification Evaluation (TIE) may be required as part of the TRE, if appropriate. A TIE is a set of procedures to identify the specific chemical(s) responsible for toxicity. These procedures are performed in three phases (characterization, identification, and confirmation) using aquatic organism toxicity tests.

ATTACHMENT B – MAP

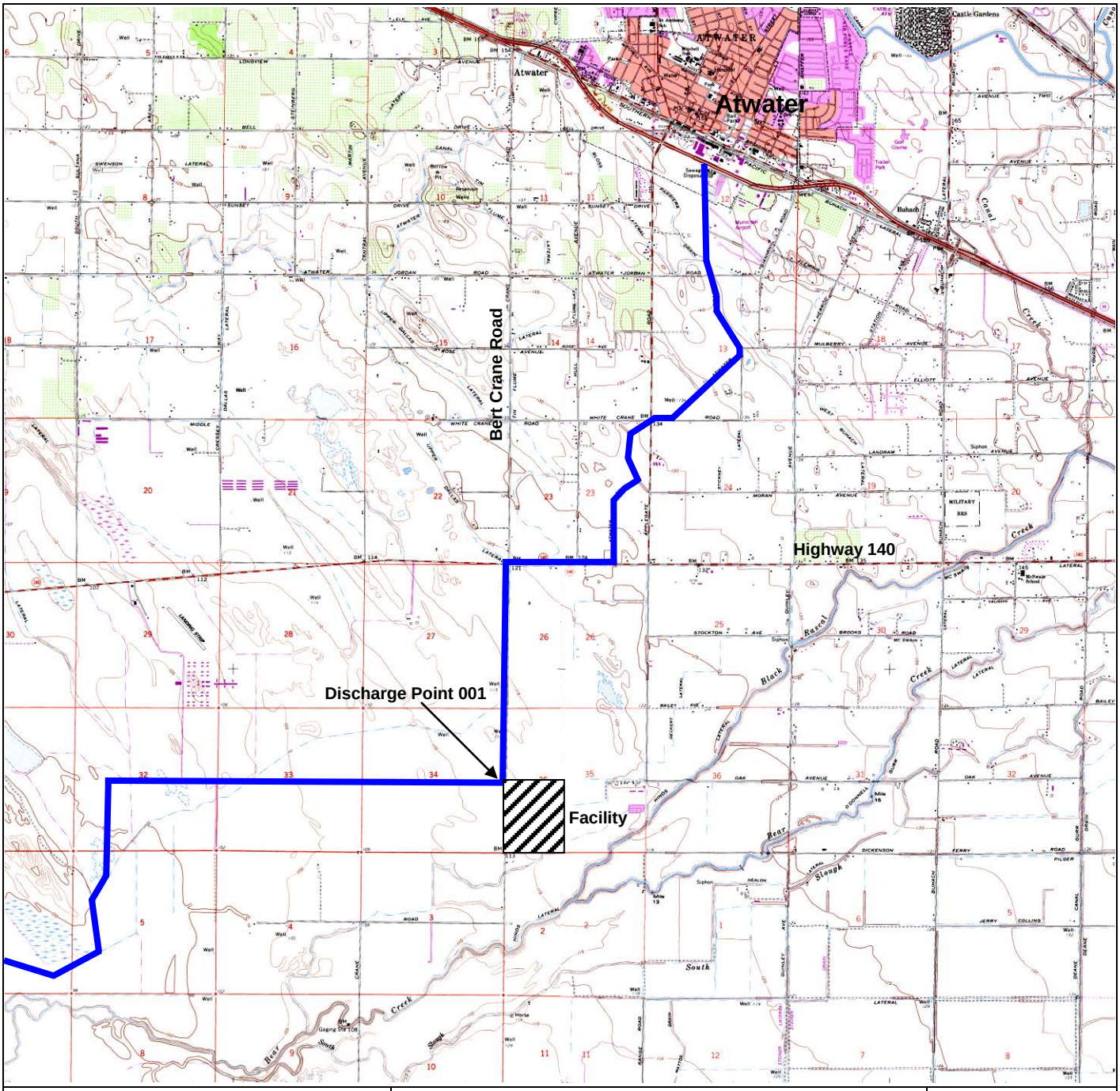

Drawing Reference: ARENA AND ATWATER U.S.G.S. TOPOGRAPHIC MAPS 7.5 MINUTE QUADRANGLES *Photorevised 1987* *Not to scale*	SITE LOCATION MAP CITY OF ATWATER ATWATER REGIONAL WWTF MERCED COUNTY	N W E S

ATTACHMENT C – FLOW SCHEMATIC

LIQUID FLOW DIAGRAM

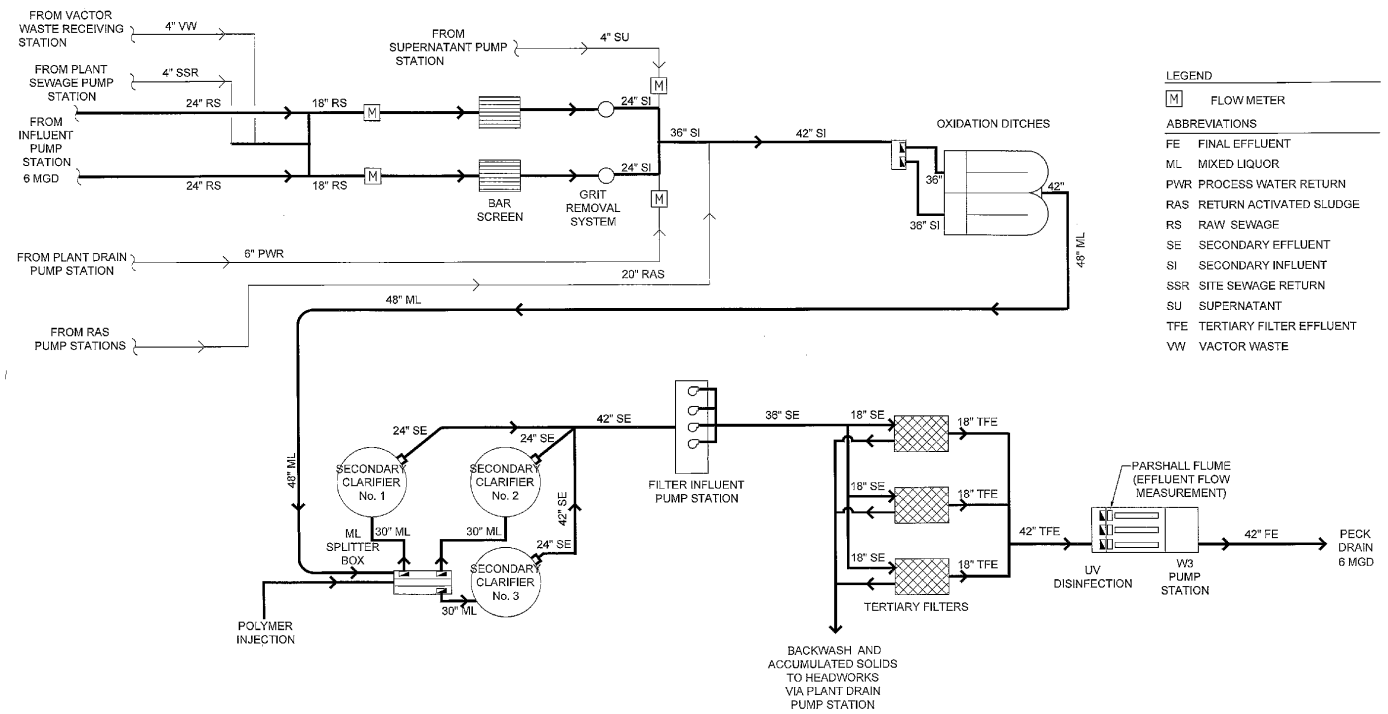

SOLIDS FLOW DIAGRAM

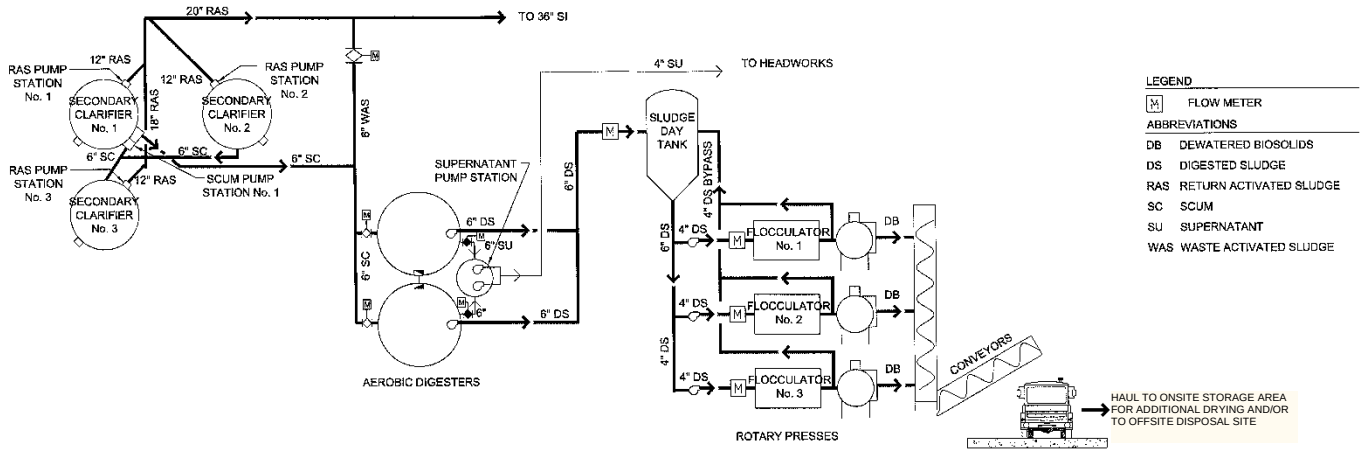

ATTACHMENT D – STANDARD PROVISIONS

I. STANDARD PROVISIONS – PERMIT COMPLIANCE

A. Duty to Comply

1. The Discharger must comply with all of the conditions of this Order. Any noncompliance constitutes a violation of the Clean Water Act (CWA) and the California Water Code (CWC) and is grounds for enforcement action, for permit termination, revocation and reissuance, or modification; or denial of a permit renewal application. (40 CFR 122.41(a).)

2. The Discharger shall comply with effluent standards or prohibitions established under section 307(a) of the CWA for toxic pollutants and with standards for sewage sludge use or disposal established under section 405(d) of the CWA within the time provided in the regulations that establish these standards or prohibitions, even if this Order has not yet been modified to incorporate the requirement. (40 CFR 122.41(a)(1).)

B. Need to Halt or Reduce Activity Not a Defense

It shall not be a defense for a Discharger in an enforcement action that it would have been necessary to halt or reduce the permitted activity in order to maintain compliance with the conditions of this Order. (40 CFR 122.41(c).)

C. Duty to Mitigate

The Discharger shall take all reasonable steps to minimize or prevent any discharge or sludge use or disposal in violation of this Order that has a reasonable likelihood of adversely affecting human health or the environment. (40 CFR 122.41(d).)

D. Proper Operation and Maintenance

The Discharger shall at all times properly operate and maintain all facilities and systems of treatment and control (and related appurtenances) which are installed or used by the Discharger to achieve compliance with the conditions of this Order. Proper operation and maintenance also includes adequate laboratory controls and appropriate quality assurance procedures. This provision requires the operation of backup or auxiliary facilities or similar systems that are installed by a Discharger only when necessary to achieve compliance with the conditions of this Order. (40 CFR 122.41(e).)

E. Property Rights

1. This Order does not convey any property rights of any sort or any exclusive privileges. (40 CFR 122.41(g).)

2. The issuance of this Order does not authorize any injury to persons or property or invasion of other private rights, or any infringement of state or local law or regulations. (40 CFR 122.5(c).)

F. Inspection and Entry

The Discharger shall allow the Central Valley Water Board, State Water Board, United States Environmental Protection Agency (USEPA), and/or their authorized representatives (including an authorized contractor acting as their representative), upon the presentation of credentials and other documents, as may be required by law, to (40 CFR 122.41(i); CWC section 13383):

1. Enter upon the Discharger's premises where a regulated facility or activity is located or conducted, or where records are kept under the conditions of this Order (40 CFR 122.41(i)(1));

2. Have access to and copy, at reasonable times, any records that must be kept under the conditions of this Order (40 CFR 122.41(i)(2));

3. Inspect and photograph, at reasonable times, any facilities, equipment (including monitoring and control equipment), practices, or operations regulated or required under this Order (40 CFR 122.41(i)(3)); and

4. Sample or monitor, at reasonable times, for the purposes of assuring Order compliance or as otherwise authorized by the CWA or the CWC, any substances or parameters at any location. (40 CFR 122.41(i)(4).)

G. Bypass

1. Definitions

a. "Bypass" means the intentional diversion of waste streams from any portion of a treatment facility. (40 CFR 122.41(m)(1)(i).)

b. "Severe property damage" means substantial physical damage to property, damage to the treatment facilities, which causes them to become inoperable, or substantial and permanent loss of natural resources that can reasonably be expected to occur in the absence of a bypass. Severe property damage does not mean economic loss caused by delays in production. (40 CFR 122.41(m)(1)(ii).)

2. Bypass not exceeding limitations. The Discharger may allow any bypass to occur which does not cause exceedances of effluent limitations, but only if it is for essential maintenance to assure efficient operation. These bypasses are not subject to the provisions listed in Standard Provisions – Permit Compliance I.G.3, I.G.4, and I.G.5 below. (40 CFR 122.41(m)(2).)

3. Prohibition of bypass. Bypass is prohibited, and the Central Valley Water Board may take enforcement action against a Discharger for bypass, unless (40 CFR 122.41(m)(4)(i)):

a. Bypass was unavoidable to prevent loss of life, personal injury, or severe property damage (40 CFR 122.41(m)(4)(i)(A));

b. There were no feasible alternatives to the bypass, such as the use of auxiliary treatment facilities, retention of untreated wastes, or maintenance during normal periods of equipment downtime. This condition is not satisfied if adequate back-up equipment should have been installed in the exercise of reasonable engineering judgment to prevent a bypass that occurred during normal periods of equipment downtime or preventive maintenance (40 CFR 122.41(m)(4)(i)(B)); and

c. The Discharger submitted notice to the Central Valley Water Board as required under Standard Provisions – Permit Compliance I.G.5 below. (40 CFR 122.41(m)(4)(i)(C).)

4. The Central Valley Water Board may approve an anticipated bypass, after considering its adverse effects, if the Central Valley Water Board determines that it will meet the three conditions listed in Standard Provisions – Permit Compliance I.G.3 above. (40 CFR 122.41(m)(4)(ii).)

5. Notice

a. Anticipated bypass. If the Discharger knows in advance of the need for a bypass, it shall submit a notice, if possible at least 10 days before the date of the bypass. (40 CFR 122.41(m)(3)(i).)

b. Unanticipated bypass. The Discharger shall submit notice of an unanticipated bypass as required in Standard Provisions - Reporting V.E below (24-hour notice). (40 CFR 122.41(m)(3)(ii).)

H. Upset

Upset means an exceptional incident in which there is unintentional and temporary noncompliance with technology based permit effluent limitations because of factors beyond the reasonable control of the Discharger. An upset does not include noncompliance to the extent caused by operational error, improperly designed treatment facilities, inadequate treatment facilities, lack of preventive maintenance, or careless or improper operation. (40 CFR 122.41(n)(1).)

1. Effect of an upset. An upset constitutes an affirmative defense to an action brought for noncompliance with such technology based permit effluent limitations if the requirements of Standard Provisions – Permit Compliance I.H.2 below are met. No determination made during administrative review of claims that noncompliance was

caused by upset, and before an action for noncompliance, is final administrative action subject to judicial review. (40 CFR 122.41(n)(2).)

2. Conditions necessary for a demonstration of upset. A Discharger who wishes to establish the affirmative defense of upset shall demonstrate, through properly signed, contemporaneous operating logs or other relevant evidence that (40 CFR 122.41(n)(3)):

a. An upset occurred and that the Discharger can identify the cause(s) of the upset (40 CFR 122.41(n)(3)(i));

b. The permitted facility was, at the time, being properly operated (40 CFR 122.41(n)(3)(ii));

c. The Discharger submitted notice of the upset as required in Standard Provisions – Reporting V.E.2.b below (24-hour notice) (40 CFR 122.41(n)(3)(iii)); and

d. The Discharger complied with any remedial measures required under Standard Provisions – Permit Compliance I.C above. (40 CFR 122.41(n)(3)(iv).)

3. Burden of proof. In any enforcement proceeding, the Discharger seeking to establish the occurrence of an upset has the burden of proof. (40 CFR 122.41(n)(4).)

II. STANDARD PROVISIONS – PERMIT ACTION

A. General

This Order may be modified, revoked and reissued, or terminated for cause. The filing of a request by the Discharger for modification, revocation and reissuance, or termination, or a notification of planned changes or anticipated noncompliance does not stay any Order condition. (40 CFR 122.41(f).)

B. Duty to Reapply

If the Discharger wishes to continue an activity regulated by this Order after the expiration date of this Order, the Discharger must apply for and obtain a new permit. (40 CFR 122.41(b).)

C. Transfers

This Order is not transferable to any person except after notice to the Central Valley Water Board. The Central Valley Water Board may require modification or revocation and reissuance of the Order to change the name of the Discharger and incorporate such other requirements as may be necessary under the CWA and the CWC. (40 CFR 122.41(l)(3) and 122.61.)

III. STANDARD PROVISIONS – MONITORING

A. Samples and measurements taken for the purpose of monitoring shall be representative of the monitored activity. (40 CFR 122.41(j)(1).)

B. Monitoring results must be conducted according to test procedures under 40 CFR Part 136 or, in the case of sludge use or disposal, approved under 40 CFR Part 136 unless otherwise specified in 40 CFR Part 503 unless other test procedures have been specified in this Order. (40 CFR 122.41(j)(4) and 122.44(i)(1)(iv).)

IV. STANDARD PROVISIONS – RECORDS

A. Except for records of monitoring information required by this Order related to the Discharger's sewage sludge use and disposal activities, which shall be retained for a period of at least 5 years (or longer as required by 40 CFR Part 503), the Discharger shall retain records of all monitoring information, including all calibration and maintenance records and all original strip chart recordings for continuous monitoring instrumentation, copies of all reports required by this Order, and records of all data used to complete the application for this Order, for a period of at least three (3) years from the date of the sample, measurement, report or application. This period may be extended by request of the Central Valley Water Board Executive Officer at any time. (40 CFR 122.41(j)(2).)

B. Records of monitoring information shall include:

1. The date, exact place, and time of sampling or measurements (40 CFR 122.41(j)(3)(i));

2. The individual(s) who performed the sampling or measurements (40 CFR 122.41(j)(3)(ii));

3. The date(s) analyses were performed (40 CFR 122.41(j)(3)(iii));

4. The individual(s) who performed the analyses (40 CFR 122.41(j)(3)(iv));

5. The analytical techniques or methods used (40 CFR 122.41(j)(3)(v)); and

6. The results of such analyses. (40 CFR 122.41(j)(3)(vi).)

C. Claims of confidentiality for the following information will be denied (40 CFR 122.7(b)):

1. The name and address of any permit applicant or Discharger (40 CFR 122.7(b)(1)); and

2. Permit applications and attachments, permits and effluent data. (40 CFR 122.7(b)(2).)

V. STANDARD PROVISIONS – REPORTING

A. Duty to Provide Information

The Discharger shall furnish to the Central Valley Water Board, State Water Board, or USEPA within a reasonable time, any information which the Central Valley Water Board, State Water Board, or USEPA may request to determine whether cause exists for modifying, revoking and reissuing, or terminating this Order or to determine compliance with this Order. Upon request, the Discharger shall also furnish to the Central Valley Water Board, State Water Board, or USEPA copies of records required to be kept by this Order. (40 CFR 122.41(h); Wat. Code, § 13267.)

B. Signatory and Certification Requirements

1. All applications, reports, or information submitted to the Central Valley Water Board, State Water Board, and/or USEPA shall be signed and certified in accordance with Standard Provisions – Reporting V.B.2, V.B.3, V.B.4, and V.B.5 below. (40 CFR 122.41(k).)

2. All permit applications shall be signed by either a principal executive officer or ranking elected official. For purposes of this provision, a principal executive officer of a federal agency includes: (i) the chief executive officer of the agency, or (ii) a senior executive officer having responsibility for the overall operations of a principal geographic unit of the agency (e.g., Regional Administrators of USEPA). (40 CFR 122.22(a)(3).).

3. All reports required by this Order and other information requested by the Central Valley Water Board, State Water Board, or USEPA shall be signed by a person described in Standard Provisions – Reporting V.B.2 above, or by a duly authorized representative of that person. A person is a duly authorized representative only if:

a. The authorization is made in writing by a person described in Standard Provisions – Reporting V.B.2 above (40 CFR 122.22(b)(1));

b. The authorization specifies either an individual or a position having responsibility for the overall operation of the regulated facility or activity such as the position of plant manager, operator of a well or a well field, superintendent, position of equivalent responsibility, or an individual or position having overall responsibility for environmental matters for the company. (A duly authorized representative may thus be either a named individual or any individual occupying a named position.) (40 CFR 122.22(b)(2)); and

c. The written authorization is submitted to the Central Valley Water Board and State Water Board. (40 CFR 122.22(b)(3).)

4. If an authorization under Standard Provisions – Reporting V.B.3 above is no longer accurate because a different individual or position has responsibility for the overall operation of the facility, a new authorization satisfying the requirements of Standard

Provisions – Reporting V.B.3 above must be submitted to the Central Valley Water Board and State Water Board prior to or together with any reports, information, or applications, to be signed by an authorized representative. (40 CFR 122.22(c).)

5. Any person signing a document under Standard Provisions – Reporting V.B.2 or V.B.3 above shall make the following certification:

"*I certify under penalty of law that this document and all attachments were prepared under my direction or supervision in accordance with a system designed to assure that qualified personnel properly gather and evaluate the information submitted. Based on my inquiry of the person or persons who manage the system or those persons directly responsible for gathering the information, the information submitted is, to the best of my knowledge and belief, true, accurate, and complete. I am aware that there are significant penalties for submitting false information, including the possibility of fine and imprisonment for knowing violations.*" (40 CFR 122.22(d).)

C. Monitoring Reports

1. Monitoring results shall be reported at the intervals specified in the Monitoring and Reporting Program (Attachment E) in this Order. (40 CFR 122.22(l)(4).)

2. Monitoring results must be reported on a Discharge Monitoring Report (DMR) form or forms provided or specified by the Central Valley Water Board or State Water Board for reporting results of monitoring of sludge use or disposal practices. (40 CFR 122.41(l)(4)(i).)

3. If the Discharger monitors any pollutant more frequently than required by this Order using test procedures approved under 40 CFR Part 136 or, in the case of sludge use or disposal, approved under 40 CFR Part 136 unless otherwise specified in 40 CFR Part 503, or as specified in this Order, the results of this monitoring shall be included in the calculation and reporting of the data submitted in the DMR or sludge reporting form specified by the Central Valley Water Board. (40 CFR 122.41(l)(4)(ii).)

4. Calculations for all limitations, which require averaging of measurements, shall utilize an arithmetic mean unless otherwise specified in this Order. (40 CFR 122.41(l)(4)(iii).)

D. Compliance Schedules

Reports of compliance or noncompliance with, or any progress reports on, interim and final requirements contained in any compliance schedule of this Order, shall be submitted no later than 14 days following each schedule date. (40 CFR 122.41(l)(5).)

E. Twenty-Four Hour Reporting

1. The Discharger shall report any noncompliance that may endanger health or the environment within two (2) hours from the time the Discharger becomes aware of the circumstances.The Discharger shall notify the Central Valley Water Board of the

noncompliance by telephone or fax within 24 hours from the time the Discharger becomes aware of the circumstances. A written submission shall also be provided to the Central Valley Water Board within five (5) days of the time the Discharger becomes aware of the circumstances. The written submission shall contain a description of the noncompliance and its cause; the period of noncompliance, including exact dates and times, and if the noncompliance has not been corrected, the anticipated time it is expected to continue; and steps taken or planned to reduce, eliminate, and prevent reoccurrence of the noncompliance. (40 CFR 122.41(l)(6)(i).)

2. The following shall be included as information that must be reported within 24 hours under this paragraph (40 CFR 122.41(l)(6)(ii)):

a. Any unanticipated bypass that exceeds any effluent limitation in this Order. (40 CFR 122.41(l)(6)(ii)(A).)

b. Any upset that exceeds any effluent limitation in this Order. (40 CFR 122.41(l)(6)(ii)(B).)

3. The Central Valley Water Board may waive the above-required written report under this provision on a case-by-case basis if an oral report has been received within 24 hours. (40 CFR 122.41(l)(6)(iii).)

F. Planned Changes

The Discharger shall give notice to the Central Valley Water Board as soon as possible of any planned physical alterations or additions to the permitted facility. Notice is required under this provision only when (40 CFR 122.41(l)(1)):

1. The alteration or addition to a permitted facility may meet one of the criteria for determining whether a facility is a new source in 40 CFR 122.29(b) (40 CFR 122.41(l)(1)(i)); or

2. The alteration or addition could significantly change the nature or increase the quantity of pollutants discharged. This notification applies to pollutants that are not subject to effluent limitations in this Order. (40 CFR 122.41(l)(1)(ii).).

3. The alteration or addition results in a significant change in the Discharger's sludge use or disposal practices, and such alteration, addition, or change may justify the application of permit conditions that are different from or absent in the existing permit, including notification of additional use or disposal sites not reported during the permit application process or not reported pursuant to an approved land application plan. (40 CFR 122.41(l)(1)(iii).)

G. Anticipated Noncompliance

The Discharger shall give advance notice to the Central Valley Water Board or State Water Board of any planned changes in the permitted facility or activity that may result in noncompliance with General Order requirements. (40 CFR 122.41(l)(2).)

H. Other Noncompliance

The Discharger shall report all instances of noncompliance not reported under Standard Provisions – Reporting V.C, V.D, and V.E above at the time monitoring reports are submitted. The reports shall contain the information listed in Standard Provision – Reporting V.E above. (40 CFR 122.41(l)(7).)

I. Other Information

When the Discharger becomes aware that it failed to submit any relevant facts in a permit application, or submitted incorrect information in a permit application or in any report to the Central Valley Water Board, State Water Board, or USEPA, the Discharger shall promptly submit such facts or information. (40 CFR 122.41(l)(8).)

VI. STANDARD PROVISIONS – ENFORCEMENT

A. The Central Valley Water Board is authorized to enforce the terms of this permit under several provisions of the CWC, including, but not limited to, sections 13385, 13386, and 13387.

VII. ADDITIONAL PROVISIONS – NOTIFICATION LEVELS

A. Publicly-Owned Treatment Works (POTWs)

All POTWs shall provide adequate notice to the Central Valley Water Board of the following (40 CFR 122.42(b)):

1. Any new introduction of pollutants into the POTW from an indirect discharger that would be subject to sections 301 or 306 of the CWA if it were directly discharging those pollutants (40 CFR 122.42(b)(1)); and

2. Any substantial change in the volume or character of pollutants being introduced into that POTW by a source introducing pollutants into the POTW at the time of adoption of the Order. (40 CFR 122.42(b)(2).)

3. Adequate notice shall include information on the quality and quantity of effluent introduced into the POTW as well as any anticipated impact of the change on the quantity or quality of effluent to be discharged from the POTW. (40 CFR 122.42(b)(3).)

ATTACHMENT E – MONITORING AND REPORTING PROGRAM

Table of Contents

I. General Monitoring Provisions E-2
II. Monitoring Locations E-3
III. Influent Monitoring Requirements E-4
  A. Monitoring Location INF-001 ..... E-4
IV. Effluent Monitoring Requirements E-4
  A. Monitoring Location EFF-001 ..... E-4
V. Whole Effluent Toxicity Testing Requirements E-6
VI. Land Discharge Monitoring Requirements – Not Applicable E-9
VII. Reclamation Monitoring Requirements – Not Applicable E-9
VIII. Receiving Water Monitoring Requirements – Surface Water E-9
  A. Monitoring Locations RSW-001 and RSW-002 ..... E-9
  B. Monitoring Location RSW-003 ..... E-10
IX. Other Monitoring Requirements E-11
  A. Biosolids E-11
  B. Municipal Water Supply E-11
  C. Ultraviolet Light (UV) Disinfection System E-12
  D. Tertiary Treatment Filters E-12
  E. Pond Monitoring E-13
  F. Chlorine Use E-14
X. Reporting Requirements E-14
  A. General Monitoring and Reporting Requirements E-14
  B. Self Monitoring Reports (SMRs) E-14
  C. Discharge Monitoring Reports (DMRs) E-17
  D. Other Reports E-18

List of Tables

Table E-1. Monitoring Station Locations E-3
Table E-2. Influent Monitoring E-4
Table E-3. Effluent Monitoring E-4
Table E-4. Chronic Toxicity Testing Dilution Series E-8
Table E-5. Receiving Water Monitoring Requirements E-9
Table E-6. Receiving Water Monitoring Requirements at RSW-003 ..... E-10
Table E-7. Municipal Water Supply Monitoring Requirements E-11
Table E-8. Ultraviolet Light Disinfection System Monitoring E-12
Table E-9. Influent to Tertiary Treatment Filters E-12
Table E-10. Effluent from Tertiary Treatment Filters E-13
Table E-11. Monitoring Periods and Reporting Schedule E-15
Table E-12. Reporting Requirements for Special Provisions E-18

ATTACHMENT E – MONITORING AND REPORTING PROGRAM

Title 40 of the Code of Federal Regulations (CFR), section 122.48 (40 CFR 122.48) requires that all NPDES permits specify monitoring and reporting requirements. California Water Code (CWC) sections 13267 and 13383 also authorize the Regional Water Quality Control Board, Central Valley Region (Central Valley Water Board) to require technical and monitoring reports. This Monitoring and Reporting Program establishes monitoring and reporting requirements, which implement the federal and California regulations.

I. GENERAL MONITORING PROVISIONS

A. Samples and measurements taken as required herein shall be representative of the volume and nature of the monitored discharge. All samples shall be taken at the monitoring locations specified below and, unless otherwise specified, before the monitored flow joins or is diluted by any other waste stream, body of water, or substance. Monitoring locations shall not be changed without notification to and the approval of this Central Valley Water Board.

B. Unless otherwise specified herein, effluent samples shall be taken downstream of the last addition of wastes to the treatment or discharge works where a representative sample may be obtained prior to mixing with the receiving waters. Samples shall be collected at such a point and in such a manner to ensure a representative sample of the discharge.

C. Chemical, bacteriological, and bioassay analyses of any material required by this Order shall be conducted by a laboratory certified for such analyses by the California Department of Public Health (DPH). Laboratories that perform sample analyses must be identified in all monitoring reports submitted to the Central Valley Water Board.In the event a certified laboratory is not available to the Discharger for any onsite field measurements such as pH, dissolved oxygen, turbidity, temperature, and residual chlorine, such analyses performed by a noncertified laboratory will be accepted provided a Quality Assurance-Quality Control Program is instituted by the laboratory. A manual containing the steps followed in this program for any onsite field measurements such as pH, dissolved oxygen, turbidity, temperature, and residual chlorine must be kept onsite at the Facility and shall be available for inspection by Central Valley Water Board staff, State Water Board staff, USEPA staff, and/or their authorized representatives. The Discharger must demonstrate sufficient capability (qualified and trained employees, properly calibrated and maintained field instruments, etc.) to adequately perform these field measurements. The Quality Assurance-Quality Control Program must conform to USEPA guidelines or to procedures approved by the Central Valley Water Board.

D. Appropriate flow measurement devices and methods consistent with accepted scientific practices shall be selected and used to ensure the accuracy and reliability of measurements of the volume of monitored discharges. All monitoring instruments and devices used by the Discharger to fulfill the prescribed monitoring program shall be properly maintained and calibrated as necessary, at least yearly, to ensure their

continued accuracy. All flow measurement devices shall be calibrated at least once per year to ensure continued accuracy of the devices.

E. Monitoring results, including noncompliance, shall be reported at intervals and in a manner specified in this Monitoring and Reporting Program.

F. Laboratories analyzing monitoring samples shall be certified by DPH, in accordance with the provision of CWC section 13176, and must include quality assurance/quality control data with their reports.

G. The Discharger shall conduct analysis on any sample provided by USEPA as part of the Discharge Monitoring Quality Assurance (DMQA) program. The results of any such analysis shall be submitted to USEPA's DMQA manager.

H. The Discharger shall file with the Central Valley Water Board technical reports on self-monitoring performed according to the detailed specifications contained in this Monitoring and Reporting Program.

I. The results of all monitoring required by this Order shall be reported to the Central Valley Water Board, and shall be submitted in such a format as to allow direct comparison with the limitations and requirements of this Order. Unless otherwise specified, discharge and receiving water flows shall be reported in terms of the monthly average and the daily averagedischarge flows.With the exception of flow, all constituents monitored on a continuous basis (metered) shall be reported as daily maximums, daily minimums, and daily averages.

II. MONITORING LOCATIONS

The Discharger shall monitor the following locations to demonstrate compliance with the effluent limitations, discharge specifications, and other requirements in this Order:

Table E-1. Monitoring Station Locations

Discharge Point Name	Monitoring Location Name	Monitoring Location Description
--	INF-001	Location where a representative sample of the Facility's influent can be obtained prior to any additives, treatment process, and plant return flows
001	EFF-001	Location where a representative sample of the Facility's effluent can be obtained prior to discharge to Peck/Atwater Drain
--	RSW-001	Peck/Atwater Drain approximately 50 feet upstream of Discharge Point 001
--	RSW-002	Peck/Atwater Drain approximately 250 feet downstream of Discharge Point 001
--	RSW-003	Peck/Atwater Drain approximately 600 feet downstream of Discharge Point 001
--	BIO-001	Representative sample location for biosolids
--	SPL-001	Municipal water supply
--	UVS-001	Ultraviolet light disinfection system
--	INT-001	Influent to tertiary treatment filters
--	INT-002	At a location after tertiary treatment filters and prior to disinfection
--	PND-001	Storm Water Retention Pond/Emergency Storage Basin

III. INFLUENT MONITORING REQUIREMENTS

A. Monitoring Location INF-001

1. The Discharger shall monitor the influent to the Facility at INF-001 as follows:

Table E-2. Influent Monitoring

Parameter	Units	Sample Type	Minimum SamplingFrequency	Required Analytical Test Method
Flow	mgd	Meter	Continuous	--
Biochemical Oxygen Demand 5-day @ 20°C	mg/L	Composite[1]	3/Week[2]	[3]
	lbs/day	Calculated	3/Week	--
Total Suspended Solids	mg/L	Composite[1]	3/Week[2]	[3]
	lbs/day	Calculated	3/Week	--
pH	standard units	Grab[4]	3/Week	[3]
Electrical Conductivity @ 25°C	µmhos/cm	Composite[1]	1/Week	[3]

[1] Composite samples shall be 24-hour, flow proportional composites.
[2] Nonconsecutive days.
[3] Pollutant shall be analyzed using the analytical methods described in 40 CFR Part 136; where no methods are specified for a given pollutant, method shall be approved by the Central Valley Water Board or the State Water Board.
[4] Grab samples shall <u>not</u> be collected at the same time each day to get a complete representation of variations in the influent.

IV. EFFLUENT MONITORING REQUIREMENTS

A. Monitoring Location EFF-001

1. The Discharger shall monitor treated effluent at EFF-001 as follows. If more than one analytical test method is listed for a given parameter, the Discharger must select from the listed methods and corresponding Minimum Level:

Table E-3. Effluent Monitoring

Parameter	Units	Sample Type	Minimum SamplingFrequency	Required Analytical Test Method
Flow	mgd	Meter	Continuous	--
Conventional Pollutants				
Biochemical Oxygen Demand (BOD) (5-day @ 20°C)	mg/L	Composite[1]	3/Week[2]	[3]
	lbs/day	Calculated	3/Week	--
BOD, Percent Removal	%	Calculated	1/Month	--
Total Suspended Solids (TSS)	mg/L	Composite[1]	3/Week[2]	[3]
	lbs/day	Calculated	3/Week	--
TSS, Percent Removal	%	Calculated	1/Month	--
pH	standard units	Grab	1/Day[4]	[3,5]
Priority Pollutants				
Copper, Total Recoverable	µg/L	Composite[1]	1/Month	[3,10]
Lead, Total Recoverable	µg/L	Composite[1]	1/Month	[3,10]
Zinc, Total Recoverable	µg/L	Composite[1]	1/Month	[3,10]

Parameter	Units	Sample Type	Minimum SamplingFrequency	Required Analytical Test Method
Priority Pollutants[6]	vary	Composite[1,7,8]	1/Year[9]	[3,6,10]
Non-Conventional Pollutants				
Aluminum, Total Recoverable	µg/L	Composite[1]	2/Year[20]	[3,19]
Ammonia Nitrogen, Total (as N)	mg/L	Grab	1/Week[4]	[3]
Chlorine, Total Residual	mg/L	Grab	1/Day during chlorine use	[3,11]
Chlorpyrifos	µg/L	Grab	1/Quarter[21]	[12]
Diazinon	µg/L	Grab	1/Quarter[21]	[12]
Dissolved Oxygen	mg/L	Grab	3/Week	[3,5]
Electrical Conductivity @ 25°C	µmhos/cm	Composite[1]	1/Week	[3]
General Minerals[13]	mg/L	Grab	1/Year	[3]
Hardness (as $CaCO_3$)	mg/L	Grab	1/Month[14]	[3]
Nitrate plusNitrite, Total (as N)	mg/L	Composite[1]	1/Week[15]	[3]
Nitrite Nitrogen, Total (as N)	mg/L	Composite[1]	1/Week[15]	[3]
TCDD Equivalents[16]	pg/L	Composite[1]	1/Permit Cycle[17]	[3]
Temperature	°C	Grab	1/Day[4]	[3,5]
Total Coliform	MPN/100 mL	Grab[18]	1/Day	[3]
Total Dissolved Solids	mg/L	Composite[1]	1/Month	[3]
Total Kjeldahl Nitrogen (as N)	mg/L	Grab	1/Month	[3]
Whole Effluent Toxicity (see Section V. below)	--	--	--	--

[1] 24-hour flow proportional composite.

[2] Nonconsecutive days.

[3] Pollutants shall be analyzed using the analytical methods described in 40 CFR Part 136; where no methods are specified for a given pollutant, method shall be approved by the Central Valley Water Board or the State Water Board. The detection limits shall be low enough to determine compliance with the effluent limitations or the applicable water quality objectives for those constituents without effluent limitations.

[4] pH and temperature shall be recorded at the time of ammonia sample collection.

[5] A hand-held field meter may be used, provided the meter utilizes a USEPA-approved algorithm/method and is calibrated and maintained in accordance with the manufacturer's instructions. A calibration and maintenance log for each meter used for monitoring required by this Monitoring and Reporting Program shall be maintained at the Facility.

[6] Priority pollutants shall include all of the constituents listed in Attachment I of this Order.

[7] In order to verify if bis(2-ethylhexyl)phthalate is truly present in the effluent discharge, the Discharger shall take steps to assure that sample containers, sampling apparatus, and analytical equipment are not sources of the detected contaminant.

[8] Volatile constituents shall be sampled in accordance with 40 CFR Part 136.

[9] Concurrent with receiving surface water sampling.

[10] For priority pollutant constituents with effluent limitations, detection limits shall be below the effluent limitations. If the lowest minimum level (ML) published in Appendix 4 of the *Policy for Implementation of Toxics Standards for Inland Surface Waters, Enclosed Bays, and Estuaries of California* (State Implementation Policy or SIP) is not below the effluent limitation, the detection limit shall be the lowest ML. For priority pollutant constituents without effluent limitations, the detection limits shall be equal to or less than the lowest MLs published in Appendix 4 of the SIP.

[11] Total chlorine residual must be monitored with a method sensitive to and accurate at the permitted level of 0.01 mg/L.

[12] USEPA Method 625M, Method 8141, or equivalent.

[13] General minerals shall include the following: boron, calcium,chloride, iron, magnesium, manganese, phosphorus, potassium, sodium, sulfate, total alkalinity (including alkalinity series), and include verification that

Parameter	Units	Sample Type	Minimum SamplingFrequency	Required Analytical Test Method

the analysis is complete (i.e., cation/anion balance).

[14] Hardness samples shall be collected concurrently with metals and/or priority pollutant samples.

[15] Monitoring for nitrate plus nitrite (as N) and nitrite(as N) shall be conducted concurrently.

[16] TCDD-Dioxin Congener Equivalents shall include all 17 of the 2,3,7,8 TCDD dioxin congeners as listed in section 3 of the SIP and Attachment J of this Order.

[17] If the dioxin monitoring shows dioxin (or dioxin equivalent) is above the CTR criteria, the Discharger shall commence quarterly (1/quarter) monitoring for one year.

[18] Samples for total coliform may be collected at any point following disinfection.

[19] Samples can be analyzed using either total or acid-soluble (inductively coupled plasma/atomic emission spectrometry or inductively coupled plasma/mass spectrometry) analysis methods, as supported by USEPA's Ambient Water Quality Criteria for Aluminum document (EPA 440/5-86-008), or other standard methods that exclude aluminum silicate particles as approved by the Executive Officer.

[20] Semi-annual (2/year) monitoring is required for the first three years following the effective date of this Order, after which the Discharger may reduce monitoring to once per year, unless directed by the Executive Officer to monitor more frequently.

[21] Quarterly (1/quarter) monitoring is required for the first three years following the effective date of this Order, after which the Discharger may submit a request to the Executive Officer to reduce or eliminate monitoring.

V. WHOLE EFFLUENT TOXICITY TESTING REQUIREMENTS

A. Acute Toxicity Testing. The Discharger shall conduct acute toxicity testing to determine whether the effluent is contributing acute toxicity to the receiving water. The Discharger shall meet the following acute toxicity testing requirements:

1. *Monitoring Frequency* – The Discharger shall perform **quarterly (1/quarter)** acute toxicity testing.In lieu of performing a separate acute bioassay, the Discharger may report the 96-hour percent survival of the fathead minnow species with the results from the chronic toxicity test procedure for determination of compliance with acute toxicity requirements. The results for acute and chronic testing must be reported separately.

2. *Sample Types*– The samples shall be flow proportional 24-hour composites and shall be representative of the volume and quality of the discharge. The effluent samples shall be taken at the effluent monitoring location EFF-001.

3. *Test Species*– Test species shall be fathead minnows (*Pimephales promelas*).

4. *Test Type and Duration*– Test type shall be static renewal, and the test duration shall be 96 hours.

5. *Dilutions*– The acute toxicity testing shall be performed using undiluted effluent.

6. *Test Methods*– The acute toxicity testing samples shall be analyzed using *Methods for Measuring the Acute Toxicity of Effluents and Receiving Waters to Freshwater and Marine Organisms, Fifth Edition*, EPA-821-R-02-012, October 2002. Temperature, total residual chlorine, and pH shall be recorded at the time of sample collection. No pH adjustment may be made unless approved by the Executive Officer.

7. *Test Failure* – If an acute toxicity test does not meet all test acceptability criteria, as specified in the test method, the Discharger must re-sample and re-test as soon as possible, not to exceed 7 days following notification of test failure.

B. Chronic Toxicity Testing. The Discharger shall conduct three species chronic toxicity testing to determine whether the effluent is contributing chronic toxicity to the receiving water. The Discharger shall meet the following chronic toxicity testing requirements:

1. *Monitoring Frequency* – The Discharger shall perform **quarterly (1/quarter)** three species chronic toxicity testing.

2. *Sample Types* – Effluent samples shall be flow proportional 24-hour compositesand shall be representative of the volume and quality of the discharge. The effluent samples shall be taken at the effluent monitoring location EFF-001. The receiving water control shall be a grab sample obtained from the RSW-001 sampling location, as identified in this Monitoring and Reporting Program.

3. *Sample Volumes* – Adequate sample volumes shall be collected to provide renewal water to complete the test in the event that the discharge is intermittent.

4. *Test Species* – Chronic toxicity testing measures sublethal (e.g., reduced growth, reproduction) and/or lethal effects to test organisms exposed to an effluent compared to that of the control organisms. The Discharger shall conduct chronic toxicity tests with:

   - The cladoceran, water flea, *Ceriodaphnia dubia* (survival and reproduction test);
   - The fathead minnow, *Pimephales promelas* (larval survival and growth test); and
   - The green alga, *Selenastrum capricornutum* (growth test).

5. *Test Methods* – The presence of chronic toxicity shall be estimated as specified in *Short-term Methods for Estimating the Chronic Toxicity of Effluents and Receiving Waters to Freshwater Organisms, Fourth Edition*, EPA/821-R-02-013 (Method Manual), October 2002.

6. *Reference Toxicant* – As required by the SIP, all chronic toxicity tests shall be conducted with concurrent testing with a reference toxicant and shall be reported with the chronic toxicity test results.

7. *Dilutions* – For regular and accelerated chronic toxicity testing it is not necessary to perform the test using a dilution series. The test may be performed using 100% effluent. For TRE monitoring, the chronic toxicity testing shall be performed using the full dilution series identified in Table E-4, below. The receiving water at RSW-001 shall be used as the diluent (unless the receiving water is toxic).

Table E-4. Chronic Toxicity Testing Dilution Series

Sample	Dilutions (%)					Controls	
	100	75	50	25	12.5	Receiving Water	Laboratory Water
% Effluent	100	75	50	25	12.5	0	0
% Receiving Water[1]	0	25	50	75	87.5	100	0
% Laboratory Water	0	0	0	0	0	0	100

[1] If there is no flow at RSW-001, the Discharger may use laboratory water for dilution.

8. *Test Failure* – The Discharger must re-sample and re-test as soon as possible, but no later than fourteen (14) days after receiving notification of a test failure. A test failure is defined as follows:

a. The reference toxicant test or the effluent test does not meet all test acceptability criteria as specified in the Method Manual, and its subsequent amendments or revisions; or

b. The percent minimum significant difference (PMSD) measured for the test exceeds the upper PMSD bound variability criterion in Table 6 on page 52 of the Method Manual. (A retest is only required in this case if the test results do not exceed the monitoring trigger specified in the Special Provision at section VI.C.2.a.iii. of this Order.)

C. WET Testing Notification Requirements. The Discharger shall notify the Central Valley Water Board within 24hours after the receipt of test results exceeding the monitoring trigger during regular or accelerated monitoring, or an exceedance of an acute toxicity effluent limitation.

D. WET Testing Reporting Requirements. All toxicity test reports shall include the contracting laboratory's complete report provided to the Discharger and shall be in accordance with the appropriate "Report Preparation and Test Review" sections of the method manuals. At a minimum, whole effluent toxicity monitoring shall be reported as follows:

1. Chronic WET Reporting. Regular chronic toxicity monitoring results shall be reported to the Central Valley Water Board **within 30 days** following completion of the test, and shall contain, at minimum:

a. The dates of sample collection and initiation of each toxicity test; and

b. The results compared to the numeric toxicity monitoring trigger.

Additionally, the monthly discharger self-monitoring reports shall contain an updated chronology of chronic toxicity test results expressed in TUc, and organized by test species, type of test (survival, growth or reproduction), and monitoring frequency, i.e., either quarterly, monthly, accelerated, or Toxicity Reduction Evaluation (TRE).

2. **Acute WET Reporting.** Acute toxicity test results shall be submitted **within 30 days** following completion of the test and reported as percent survival.

3. **TRE Reporting.** Reports for TREs shall be submitted in accordance with the schedule contained in the Discharger's approved TRE Work Plan.

4. **Quality Assurance (QA).** The Discharger must provide the following information for QA purposes:

   a. Results of the applicable reference toxicant data with the statistical output page giving the species, NOEC, LOEC, type of toxicant, dilution water used, concentrations used, PMSD, and dates tested.

   b. The reference toxicant control charts for each endpoint, which include summaries of reference toxicant tests performed by the contracting laboratory.

   c. Any information on deviations or problems encountered and how they were dealt with.

VI. LAND DISCHARGE MONITORING REQUIREMENTS – NOT APPLICABLE

VII. RECLAMATION MONITORING REQUIREMENTS – NOT APPLICABLE

VIII. RECEIVING WATER MONITORING REQUIREMENTS – SURFACE WATER

A. Monitoring Locations RSW-001 and RSW-002

1. The Discharger shall monitor Peck/Atwater Drain at RSW-001 and RSW-002as follows:

Table E-5. Receiving Water Monitoring Requirements

Parameter	Units	Sample Type	Minimum SamplingFrequency	Required Analytical Test Method
Flow[1]	mgd	Meter	Continuous	--
pH	standard units	Grab	1/Week	[3,8]
Priority Pollutants[2]	vary	Grab	1/Year	[3,4]
Aluminum, Total Recoverable	µg/L	Grab	2/Year[9]	[3,7]
Chlorpyrifos	µg/L	Grab	1/Quarter[10]	[5]
Diazinon	µg/L	Grab	1/Quarter[10]	[5]
Dissolved Oxygen	mg/L	Grab	1/Week	[3,8]
Electrical Conductivity @ 25°C	µmhos/cm	Grab	1/Week	[3]
General Minerals[6]	vary	Grab	1/Year	[3]
Hardness (as $CaCO_3$)	mg/L	Grab	1/Month	[3]
Temperature	°C	Grab	1/Week	[3,8]
Turbidity	NTU	Grab	1/Week	[3,8]

Parameter	Units	Sample Type	Minimum SamplingFrequency	Required Analytical Test Method

[1] The RSW-001 flow monitoring location shall be at the intersection of Bert Crane Road and Highway 140. Flow monitoring at RSW-002 is not required.
[2] Priority pollutants shall include all of the constituents listed in Attachment I of this Order. Priority pollutant monitoring is required at RSW-001 only.
[3] Pollutants shall be analyzed using the analytical methods described in 40 CFR Part 136; where no methods are specified for a given pollutant, method shall be approved by the Central Valley Water Board or the State Water Board.
[4] For priority pollutant constituents, the detection limits shall be equal to or less than the lowest ML published in Appendix 4 of the SIP. Sampling and analysis of bis(2-ethylhexyl)phthalate shall be conducted using ultra-clean techniques that eliminate the possibility of sample contamination.
[5] USEPA Method 625M, Method 8141, or equivalent.
[6] General minerals shall include the following: boron, calcium,chloride, iron, magnesium, manganese, phosphorus, potassium, sodium, sulfate, total alkalinity (including alkalinity series), and include verification that the analysis is complete (i.e., cation/anion balance).
[7] Samples can be analyzed using either total or acid-soluble (inductively coupled plasma/atomic emission spectrometry or inductively coupled plasma/mass spectrometry) analysis methods, as supported by USEPA's Ambient Water Quality Criteria for Aluminum document (EPA 440/5-86-008), or other standard methods that exclude aluminum silicate particles as approved by the Executive Officer.
[8] A hand-held field meter may be used, provided the meter utilizes a USEPA-approved algorithm method, and is calibrated and maintained in accordance with the manufacturer's instructions. A calibration and maintenance log for each meter used for monitoring required by this MRP shall be maintained at the Facility.
[9] Semi-annual (2/year) monitoring is required for the first three years following the effective date of this Order, after which the Discharger may reduce monitoring to once per year, unless directed by the Executive Officer to monitor more frequently.
[10] Quarterly (1/quarter) monitoring is required for the first three years following the effective date of this Order, after which the Discharger may submit a request to the Executive Officer to reduce or eliminate monitoring.

2. In conducting the receiving water sampling, a log shall be kept of the receiving water conditions throughout the reach bounded by monitoring locations RSW-001 and RSW-002. Attention shall be given to the presence or absence of:

a. Floating or suspended matter
b. Discoloration
c. Bottom deposits
d. Aquatic life
e. Visible films, sheens, or coatings
f. Fungi, slimes, or objectionable growths
g. Potential nuisance conditions

Notes on the receiving water conditions shall be summarized in the monitoring reports.

B. Monitoring Location RSW-003

1. The Discharger shall monitor Peck/Atwater Drain at RSW-003 as follows:

Table E-6. Receiving Water Monitoring Requirements at RSW-003

Parameter	Units	Sample Type	Minimum Sampling Frequency	Required Analytical Test Method
Temperature	°C/°F	Grab	1/Week	[1,2]

Parameter	Units	Sample Type	Minimum Sampling Frequency	Required Analytical Test Method

[1] Pollutants shall be analyzed using the analytical methods described in 40 CFR Part 136; where no methods are specified for a given pollutant, method shall be approved by the Central Valley Water Board or the State Water Board.

[2] A hand-held field meter may be used, provided the meter utilizes a USEPA-approved algorithm method, and is calibrated and maintained in accordance with the manufacturer's instructions. A calibration and maintenance log for each meter used for monitoring required by this MRP shall be maintained at the Facility.

IX. OTHER MONITORING REQUIREMENTS

A. Biosolids

1. Monitoring Location BIO-001

a. A composite sample of sludge shall be collected **quarterly (1/quarter)** at Monitoring Location BIO-001 in accordance with USEPA's *POTW Sludge Sampling and Analysis Guidance Document*, August 1989, and tested for the metals listed in Title 22, CCR.

b. A composite sample of sludge shall be collected **annually (1/year)**at Monitoring Location BIO-001 in accordance with USEPA's *POTW Sludge Sampling and Analysis Guidance Document*, August 1989, and tested for priority pollutants listed in 40 CFR Part 122, Appendix D, Tables II and III (excluding total phenols).

c. Sampling records shall be retained for a minimum of 5 years. A log shall be maintained of sludge quantities generated and of handling and disposal activities. The frequency of entries is discretionary.

B. Municipal Water Supply

1. Monitoring Location SPL-001

The Discharger shall monitor the municipal water supply at SPL-001 as follows. Sampling stations shall be established where representative samples of each municipal water supply source can be obtained.

Table E-7. Municipal Water Supply Monitoring Requirements

Parameter	Units	Sample Type	Minimum SamplingFrequency	Required Analytical Test Method
Electrical Conductivity @ 25°C[1]	µmhos/cm	Grab	1/Year	[2]
Total Dissolved Solids[1]	mg/L	Grab	1/Year	[2]
Standard Minerals[3]	mg/L	Grab	1/Permit Cycle[4]	[2]

Parameter	Units	Sample Type	Minimum SamplingFrequency	Required Analytical Test Method

[1] If the water supply is from more than one source, the electrical conductivity and total dissolved solids shall be reported as a weighted average and copies of supporting calculations shall be included with the self-monitoring reports.
[2] Pollutants shall be analyzed using the analytical methods described in 40 CFR Part 136; where no methods are specified for a given pollutant, method shall be approved by the Central Valley Water Board or the State Water Board.
[3] Standard minerals shall include all major cations and anions and include verification that the analysis is complete (i.e., cation/anion balance).
[4] Monitoring shall be conducted once during the third year of the permit.

C. Ultraviolet Light (UV) Disinfection System

1. Monitoring Location UVS-001

The Discharger shall monitor the UV disinfection system at UVS-001 as follows:

Table E-8. Ultraviolet Light Disinfection System Monitoring

Parameter	Units	Sample Type	Minimum Sampling Frequency
Flow	mgd	Meter	Continuous[1]
Number of UV banks in operation	Number	Meter	Continuous[1]
UV Transmittance	Percent (%)	Meter	Continuous[1]
UV Power Setting	Percent (%)	Meter	Continuous[1]
UV Dose[2]	[3]	Calculated	Continuous[1]

[1] For continuous analyzers, the Discharger shall report documented routine meter maintenance activities including date, time of day, and duration, in which the analyzer(s) is not in operation.
[2] Report daily minimum UV dose, daily average UV dose, and weekly average UV dose. For the daily minimum UV dose, also report associated number of banks, gallons per minute per lamp, and UV transmittance used in the calculation. If effluent discharge has received less than the minimum UV dose and is not diverted from discharging to Peck/Atwater Drain, report the duration and dose calculation variables associated with each incident.
[3] UV dosage shall be reported in units ofmillijoules per square centimeter (mJ/cm^2).

D. Tertiary Treatment Filters

1. Monitoring Location INT-001

The Discharger shall monitor the influent to the tertiary treatment filtersat INT-001, as follows:

Table E-9. Influent to Tertiary Treatment Filters

Parameter	Units	Sample Type	Minimum Sampling Frequency	Required Analytical Test Method
Turbidity[1]	NTU	Meter	Continuous	[2]

Parameter	Units	Sample Type	Minimum Sampling Frequency	Required Analytical Test Method

[1] If turbidity exceeds 5 NTU for more than 15 minutes when not coagulating, the Discharger shall add chemicals or divert the wastewater. If turbidity exceeds 10 NTU when not coagulating and the wastewater is not diverted to the emergency storage basin, the Discharger shall collect a sample as soon as practicable for total coliform at EFF-001 and report the duration of the turbidity exceedance.

[2] Pollutants shall be analyzed using the analytical methods described in 40 CFR Part 136; where no methods are specified for a given pollutant, method shall be approved by the Central Valley Water Board or the State Water Board.

2. Monitoring Location INT-002

a. The Discharger shall monitor the effluent from the tertiary treatment filters at INT-002, prior to disinfection,as follows:

Table E-10. Effluent from Tertiary Treatment Filters

Parameter	Units	Sample Type	Minimum Sampling Frequency	Required Analytical Test Method
Turbidity[1]	NTU	Meter	Continuous	[2]

[1] If the turbidity exceeds 10 NTU when coagulation is used or 2 NTU when coagulation is not used, and the wastewater is not diverted to the emergency storage basin,the Discharger shall collect a sample as soon as practicable for total coliform at EFF-001 and report the duration of the turbidity exceedance.

[2] Pollutants shall be analyzed using the analytical methods described in 40 CFR Part 136; where no methods are specified for a given pollutant, method shall be approved by the Central Valley Water Board or the State Water Board.

b. The Discharger shall indicate in its monthly self-monitoring reports which days it used coagulation.

E. Pond Monitoring

1. Monitoring Location PND-001

a. The Discharger shall keep a log related to the use of the stormwater retention pond/emergency storage basin, and shall submit the log with its monthly self-monitoring reports. In particular the Discharger shall record the following when any type of wastewater (except storm water) is directed to the basin:

i. The date(s) when wastewater was directed to the basin;

ii. The type(s) of wastewater (e.g., untreated due to plant upset, tertiary treated) directed to the basin;

iii. The total volume of wastewater directed to the basin;

iv. The duration of time wastewater is collected in the basin, prior to redirection back to the wastewater treatment facility;

v. The date when all wastewater in the basin was redirected to the Facility; and

vi. The freeboard available in the basin.

F. Chlorine Use

1. The Discharger shall indicate in its monthly self-monitoring reports when it uses chlorine for operation and maintenance purposes, including the dates chlorine was used, the amount of chlorine used, the duration of use, the location of use, and how chlorinated wastewater, if any, was disposed (i.e., routed to the headworks).

X. REPORTING REQUIREMENTS

A. General Monitoring and Reporting Requirements

1. The Discharger shall comply with all Standard Provisions (Attachment D) related to monitoring, reporting, and recordkeeping.

2. Upon written request of the Central Valley Water Board, the Discharger shall submit a summary monitoring report. The report shall contain both tabular and graphical summaries of the monitoring data obtained during the previous year(s).

3. **Compliance Time Schedules – Not Applicable**

4. The Discharger shall report to the Central Valley Water Board any toxic chemical release data it reports to the State Emergency Response Commission within 15 days of reporting the data to the Commission pursuant to section 313 of the "*Emergency Planning and Community Right to Know Act*" of 1986.

B. Self Monitoring Reports (SMRs)

1. The Discharger shall continue to submit electronicself-monitoring reports (eSMRs) using the State Water Board's California Integrated Water Quality System (CIWQS) Program web site (http://ciwqs.waterboards.ca.gov/). The Discharger shall maintain sufficient staffing and resources to ensure it submits eSMRs during the effective duration of this Order. This includes provision of training and supervision of individuals (e.g., Discharger personnel or consultant) on how to prepare and submit eSMRs. The CIWQS web site will provide additional directions for eSMR submittal in the event there will be service interruption.

2. The Discharger shall report in the SMR the results for all monitoring specified in this Monitoring and Reporting Program under sections III through X. The Discharger shall submit monthly, quarterly, and annual SMRs including the results of all required monitoring using USEPA-approved test methods or other test methods specified in this Order. If the Discharger monitors any pollutant more frequently than required by this Order, the results of this monitoring shall be included in the calculations and reporting of the data submitted in the SMR.

3. Monitoring periods and reporting for all required monitoring shall be completed according to the following schedule:

Table E-11. Monitoring Periods and Reporting Schedule

Sampling Frequency	Monitoring Period Begins On…	Monitoring Period	SMR Due Date
Continuous	The day after the Facility becomes operational	All	Submit with monthlySMR
1/Day	The day after the Facility becomes operational	Midnight through 11:59PM or any 24-hour period that reasonably represents a calendar day for purpose of sampling	Submit with monthlySMR
3/Week	The day after the Facility becomes operational	Sunday through Saturday	Submit with monthlySMR
1/Week	The day after the Facility becomes operational	Sunday through Saturday	Submit with monthlySMR
1/Month	The day after the Facility becomes operational	First day of calendar month through last day of calendar month	First day of the second month following month of sampling
1/Quarter	The day after the Facility becomes operational	1 January through 1 March 1 April through 30 June 1 July through 30 September 1 October through 31 December	1 May 1 August 1 November 1 February
1/Quarter (Whole Effluent Toxicity)	The day after the Facility becomes operational	1 January through 1 March 1 April through 30 June 1 July through 30 September 1 October through 31 December	Within 30 days following completion of test
2/Year	The day after the Facility becomes operational	1 January through 30 June 1 July through 31 December	Submit with the monthly SMR in which sample was taken (e.g., if a sample is taken in March, the result must be included in the March SMR [due 1 May])
1/Year	The day after the Facility becomes operational	1 January through 31 December	Submit with the monthly SMR in which sample was taken (e.g., if a sample is taken in March, the result must be included in the March SMR [due 1 May])
1/Year (Pretreatment)	The day after the Facility becomes operational	1 January through 31 December	28 February
1/Permit Cycle	**<30 November 2013>**	**<during the third year of the permit>**	Submit with the monthly SMR in which sample was taken (e.g., if a sample is taken in March, the result must be included in the March SMR [due 1 May])

4. **Reporting Protocols.** The Discharger shall report with each sample result the applicable reported Minimum Level (ML)/Reporting Limit (RL) and the current Method Detection Limit (MDL), as determined by the procedure in 40 CFR Part 136.

   The Discharger shall report the results of analytical determinations for the presence of chemical constituents in a sample using the following reporting protocols:

   a. Sample results greater than or equal to the reported ML/RL shall be reported as measured by the laboratory (i.e., the measured chemical concentration in the sample).

   b. Sample results less than the ML/RL, but greater than or equal to the laboratory's MDL, shall be reported as "Detected, but Not Quantified," or DNQ. The estimated chemical concentration of the sample shall also be reported.

   For the purposes of data collection, the laboratory shall write the estimated chemical concentration next to DNQ as well as the words "Estimated Concentration" (may be shortened to "Est. Conc."). The laboratory may, if such information is available, include numerical estimates of the data quality for the reported result. Numerical estimates of data quality may be percent accuracy (± a percentage of the reported value), numerical ranges (low to high), or any other means considered appropriate by the laboratory.

   c. Sample results less than the laboratory's MDL shall be reported as "Not Detected," or ND.

   d. Dischargers are to instruct laboratories to establish calibration standards so that the ML/RL value (or its equivalent if there is differential treatment of samples relative to calibration standards) is the lowest calibration standard. At no time is the Discharger to use analytical data derived from extrapolation beyond the lowest point of the calibration curve.

5. **Multiple Sample Data.** When determining compliance with an AMEL, AWEL, or MDEL for priority pollutants and more than one sample result is available, the Discharger shall compute the arithmetic mean unless the data set contains one or more reported determinations of "Detected, but Not Quantified" (DNQ) or "Not Detected" (ND). In those cases, the Discharger shall compute the median in place of the arithmetic mean in accordance with the following procedure:

   a. The data set shall be ranked from low to high, ranking the reported ND determinations lowest, DNQ determinations next, followed by quantified values (if any). The order of the individual ND or DNQ determinations is unimportant.

   b. The median value of the data set shall be determined. If the data set has an odd number of data points, then the median is the middle value. If the data set has an even number of data points, then the median is the average of the two values around the middle unless one or both of the points are ND or DNQ, in which case

the median value shall be the lower of the two data points where DNQ is lower than a value and ND is lower than DNQ.

6. The Discharger shall submit eSMRs in accordance with the following requirements:

a. When CIWQS does not provide for entry into a tabular format within the system, the Discharger shall electronically submit the data as an attachment under the Attachments tab.

b. The Discharger shall attach all laboratory analysis sheets, including quality assurance/quality control information, with all its eSMRs for which sample analyses were performed.

c. The Discharger shall attach or enter a cover letter witheacheSMR. The information contained in the cover letter shall clearly identify violations of the WDRs; discuss corrective actions taken or planned; and the proposed time schedule for corrective actions. Identified violations must include a description of the requirement that was violated and a description of the violation. Violations must also be entered into the CIWQS web site under the Violations tab for the reporting period in which the violation occurred.

d. SMRs must be submitted to the Central Valley Water Board, signed and certified as required by the Standard Provisions (Attachment D), through the CIWQS web site.

7. Reports must clearly show when discharging to EFF-001 or other permitted discharge locations. Reports must show the date that the discharge started and stopped at each location.

C. Discharge Monitoring Reports (DMRs)

1. DMRs must be signed and certified as required by the standard provisions (Attachment D). The Discharger shall submit the original DMR and one copy of the DMR to the address listed below:

STANDARD MAIL	FEDEX/UPS/ OTHER PRIVATE CARRIERS
State Water Resources Control Board Division of Water Quality c/o DMR Processing Center PO Box 100 Sacramento, CA 95812-1000	State Water Resources Control Board Division of Water Quality c/o DMR Processing Center 1001 I Street, 15th Floor Sacramento, CA 95814

2. All discharge monitoring results must be reported on the official USEPA pre-printed DMR forms (EPA Form 3320-1). Forms that are self-generated will not be accepted unless they follow the exact same format of EPA Form 3320-1.

3. At any time during the term of this permit, the State Water Board or Central Valley Water Board may notify the Discharger to electronically submit SMRs that will satisfy federal requirements for submittal of DMRs. Until such notification is given, the Discharger shall submit DMRs in accordance with the requirements described below.

D. Other Reports

1. **Progress Reports.** The Discharger shall submit a progress report that includes the status of its salinity evaluation and minimization.

Table E-12. Reporting Requirements for Special Provisions

Special Provision	Reporting Requirement
Salinity Evaluation and Minimization Plan (Section VI.C.3.a.)	**1 August**, annually, after submittal of plan

2. The Discharger shall report the results of any special studies, acute and chronic toxicity testing, and TRE/TIE required by Special ProvisionVI.C.2 of this Order.

3. The Discharger's sanitary sewer system collects wastewater using sewers, pipes, pumps, and/or other conveyance systems and directs the raw sewage to the wastewater treatment facility. A "sanitary sewer overflow" is defined as a discharge to ground or surface water from the sanitary sewer system at any point upstream of the wastewater treatment facility. Sanitary sewer overflows are prohibited by this Order. All violations must be reported as required in Standard Provisions. Facilities (such as wet wells, regulated impoundments, tanks, highlines, etc.) may be part of a sanitary sewer system and discharges to these facilities are not considered sanitary sewer overflows, provided that the waste is fully contained within these temporary storage facilities.

4. **Annual Operations Report.** By **1 February** of each year, the Discharger shall submit a written report to the Executive Officer through the CIWQS web site containing the following:

   a. The names, certificate grades, and general responsibilities of all persons employed at the Facility.

   b. The names and telephone numbers of persons to contact regarding the Facility for emergency and routine situations.

   c. A statement certifying when the flow meter(s) and other monitoring instruments and devices were last calibrated, including identification of who performed the calibration.

   d. A statement certifying whether the current operation and maintenance manual, and contingency plan, reflect the Facility as currently constructed and operated, and the dates when these documents were last revised and last reviewed for adequacy.

e. The Discharger may also be requested to submit an annual report to the Central Valley Water Board with both tabular and graphical summaries of the monitoring data obtained during the previous year. Any such request shall be made in writing. The report shall discuss the compliance record. If violations have occurred, the report shall also discuss the corrective actions taken and planned to bring the discharge into full compliance with the waste discharge requirements. The Discharger is not required to report violations using the CIWQS web site (Violations tab) if the violations have previously been reported.

5. Annual Pretreatment Reporting Requirements. The Discharger shall submit **annually (1/year)** a report to the Central Valley Water Board, with copies to USEPA Region 9 and the State Water Board, describing the Discharger's pretreatment activities over the previous 12 months. In the event that the Discharger is not in compliance with any conditions or requirements of this Order, including noncompliance with pretreatment audit/compliance inspection requirements, then the Discharger shall also include the reasons for noncompliance and state how and when the Discharger shall comply with such conditions and requirements.

An annual report shall be submitted by **28 February** and include at least the following items:

a. A summary of analytical results from representative, flow proportioned, 24-hour composite sampling of the POTW's influent and effluent for those pollutants USEPA has identified under section 307(a) of the CWA which are known or suspected to be discharged by industrial users.

Sludge shall be sampled during the same 24-hour period and analyzed for the same pollutants as the influent and effluent sampling and analysis. The sludge analyzed shall be a composite sample of a minimum of 12 discrete samples taken at equal time intervals over the 24-hour period. Wastewater and sludge sampling and analysis shall be performed at least annually. The discharger shall also provide any influent, effluent, or sludge monitoring data for nonpriority pollutants which may be causing or contributing to Interference, Pass-Through or adversely impacting sludge quality. Sampling and analysis shall be performed in accordance with the techniques prescribed in 40 CFR Part 136 and amendments thereto.

b. A discussion of Upset, Interference, or Pass-Through incidents, if any, at the treatment facility, which the Discharger knows or suspects were caused by industrial users of the POTW. The discussion shall include the reasons why the incidents occurred, the corrective actions taken and, if known, the name and address of the industrial user(s) responsible. The discussion shall also include a review of the applicable pollutant limitations to determine whether any additional limitations, or changes to existing requirements, may be necessary to prevent Pass-Through, Interference, or noncompliance with sludge disposal requirements.

c. The cumulative number of industrial users that the Discharger has notified regarding Baseline Monitoring Reports and the cumulative number of industrial user responses.

d. An updated list of the Discharger's industrial users including their names and addresses, or a list of deletions and additions keyed to a previously submitted list. The Discharger shall provide a brief explanation for each deletion. The list shall identify the industrial users subject to federal categorical standards by specifying which set(s) of standards are applicable. The list shall indicate which categorical industries, or specific pollutants from each industry, are subject to local limitations that are more stringent than the federal categorical standards. The Discharger shall also list the noncategorical industrial users that are subject only to local discharge limitations. The Discharger shall characterize the compliance status through the year of record of each industrial user by employing the following descriptions:

i. complied with baseline monitoring report requirements (where applicable);

ii. consistently achieved compliance;

iii. inconsistently achieved compliance;

iv. significantly violated applicable pretreatment requirements as defined by 40 CFR 403.8(f)(2)(vii);

v. complied with schedule to achieve compliance (include the date final compliance is required);

vi. did not achieve compliance and not on a compliance schedule; and

vii. compliance status unknown.

The report shall describe the compliance status of each industrial user characterized by the descriptions in items iii. through vii. above and shall also identify the compliance status of the POTW with regards to audit/pretreatment compliance inspection requirements. If none of the aforementioned conditions exist, at a minimum, a letter indicating that all industries are in compliance and no violations or changes to the pretreatment program have occurred during the calendar year.

e. A summary of the inspection and sampling activities conducted by the Discharger during the past year to gather information and data regarding the industrial users. The summary shall include:

i. The names and addresses of the industrial users subjected to surveillance and an explanation of whether they were inspected, sampled, or both and the frequency of these activities at each user; and

ii. The conclusions or results from the inspection or sampling of each industrial user.

f. A summary of the compliance and enforcement activities during the past year. The summary shall include the names and addresses of the industrial users affected by the following actions:

i. Warning letters or notices of violation regarding the industrial users' apparent noncompliance with federal categorical standards or local discharge limitations. For each industrial user, identify whether the apparent violation concerned the federal categorical standards or local discharge limitations.

ii. Administrative orders regarding the industrial users noncompliance with federal categorical standards or local discharge limitations. For each industrial user, identify whether the violation concerned the federal categorical standards or local discharge limitations.

iii. Civil actions regarding the industrial users' noncompliance with federal categorical standards or local discharge limitations. For each industrial user, identify whether the violation concerned the federal categorical standards or local discharge limitations.

iv. Criminal actions regarding the industrial users’ noncompliance with federal categorical standards or local discharge limitations. For each industrial user, identify whether the violation concerned the federal categorical standards or local discharge limitations.

v. Assessment of monetary penalties. For each industrial user identify the amount of the penalties.

vi. Restriction of flow to the POTW.

vii. Disconnection from discharge to the POTW.

g. A description of any significant changes in operating the pretreatment program which differ from the information in the Discharger's approved Pretreatment Program including, but not limited to, changes concerning: the program's administrative structure, local industrial discharge limitations, monitoring program or monitoring frequencies, legal authority or enforcement policy, funding mechanisms, resource requirements, or staffing levels.

h. A summary of the annual pretreatment budget, including the cost of pretreatment program functions and equipment purchases.

Duplicate signed copies of these Pretreatment Program reports shall be submitted to the Central Valley Water Board and the:

State Water Resources Control Board
Division of Water Quality
1001 I Street or P.O. Box 100
Sacramento, CA 95812

and the

Regional Pretreatment Coordinator
CWA Compliance Office (WTR-7)
U.S. Environmental Protection Agency
75 Hawthorne Street
San Francisco, CA 94105

ATTACHMENT F – FACT SHEET

Table of Contents

I. Permit Information F-3
II. Facility Description F-4
A. Description of Wastewater and Biosolids Treatment or Controls F-4
B. Discharge Points and Receiving Waters F-5
C. Summary of Existing Requirements and Self-Monitoring Report (SMR) Data – Not Applicable F-6
D. Compliance Summary – Not Applicable F-6
E. Planned Changes – Not Applicable F-6
III. Applicable Plans, Policies, and Regulations F-6
A. Legal Authorities F-6
B. California Environmental Quality Act (CEQA) F-6
C. State and Federal Regulations, Policies, and Plans F-7
D. Impaired Water Bodies on CWA 303(d) List F-8
E. Other Plans, Polices and Regulations F-10
IV. Rationale For Effluent Limitations and Discharge Specifications F-10
A. Discharge Prohibitions F-11
B. Technology-Based Effluent Limitations F-12
1. Scope and Authority F-12
2. Applicable Technology-Based Effluent Limitations F-13
C. Water Quality-Based Effluent Limitations (WQBELs) F-14
1. Scope and Authority F-14
2. Applicable Beneficial Uses and Water Quality Criteria and Objectives F-14
3. Determining the Need for WQBELs F-25
4. WQBEL Calculations F-34
5. Whole Effluent Toxicity (WET) F-37
D. Performance-based Effluent Limitations F-39
1. Applicable Performance-based Effluent Limitation F-39
E. Final Effluent Limitations F-40
1. Mass-based Effluent Limitations F-40
2. Averaging Periods for Effluent Limitations F-40
3. Satisfaction of Anti-Backsliding Requirements F-41
4. Satisfaction of Antidegradation Policy F-41
5. Stringency of Requirements for Individual Pollutants F-41
F. Interim Effluent Limitations – Not Applicable F-43
G. Land Discharge Specifications – Not Applicable F-43
H. Reclamation Specifications – Not Applicable F-43
V. Rationale for Receiving Water Limitations F-44
A. Surface Water F-44
B. Groundwater F-44
VI. Rationale for Monitoring and Reporting Requirements F-45
A. Influent Monitoring F-45
B. Effluent Monitoring F-45

C. Whole Effluent Toxicity Testing Requirements F-46
D. Receiving Water Monitoring F-46
1. Surface Water F-46
2. Groundwater F-46
E. Other Monitoring Requirements F-46
VII. Rationale for Provisions F-47
A. Standard Provisions F-47
B. Special Provisions F-47
1. Reopener Provisions F-47
2. Special Studies and Additional Monitoring Requirements F-48
3. Best Management Practices and Pollution Prevention F-52
4. Construction, Operation, and Maintenance Specifications F-52
5. Special Provisions for Municipal Facilities (POTWs Only) F-52
6. Other Special Provisions F-53
7. Compliance Schedules – Not Applicable F-53
VIII. Public Participation F-54
A. Notification of Interested Parties F-54
B. Written Comments F-54
C. Public Hearing F-54
D. Waste Discharge Requirements Petitions F-55
E. Information and Copying F-55
F. Register of Interested Persons F-55
G. Additional Information F-55

List of Tables

Table F-1. Facility Information F-3
Table F-2. Summary of Applicable Technology-based Effluent Limitations F-13
Table F-3. Basin Plan Beneficial Uses F-16
Table F-4. Nickel ECA Evaluation F-21
Table F-5. Silver ECA Evaluation F-24
Table F-6. Summary of ECA Evaluations for CTR Hardness-dependent Metals F-25
Table F-7. Summary of Applicable Water Quality-Based Effluent Limitations F-36
Table F-8. Summary of Performance-based Effluent Limitation F-40
Table F-9. Summary of Final Effluent Limitations F-42

ATTACHMENT F – FACT SHEET

As described in the Findings in section II of this Order, this Fact Sheet includes the legal requirements and technical rationale that serve as the basis for the requirements of this Order.

This Order has been prepared under a standardized format to accommodate a broad range of discharge requirements for Dischargers in California. Only those sections or subsections of this Order that are specifically identified as "not applicable" have been determined not to apply to this Discharger. Sections or subsections of this Order not specifically identified as "not applicable" are fully applicable to this Discharger.

I. PERMIT INFORMATION

The following table summarizes administrative information related to the Facility.

Table F-1. Facility Information

WDID	5B24NP00017
Discharger	City of Atwater
Name of Facility	Atwater Regional Wastewater Treatment Facility
Facility Address	530 South Bert Crane Road
	Atwater, CA 95301
	Merced County
Facility Contact, Title and Phone	David Church, Director of Public Works, 209-357-6370
Authorized Person to Sign and Submit Reports	Steve Pound, Chief Plant Operator David Church, Director of Public Works
Mailing Address	750 Bellevue Road Atwater, CA 95301
Billing Address	Same as Mailing Address
Type of Facility	Publicly Owned Treatment Works
Major or Minor Facility	Major
Threat to Water Quality	2
Complexity	B
Pretreatment Program	Yes
Reclamation Requirements	Not Applicable
Facility Permitted Flow	6.0 million gallons per day (mgd)
Facility Design Flow	6.0 mgd
Watershed	San Joaquin Valley Floor Hydrologic Unit, El Nido-Stevinson Hydrologic Area (No. 535.70)
Receiving Water	Peck/Atwater Drain
Receiving Water Type	Inland Surface Water

A. The City of Atwater (hereinafter Discharger) is the owner of the Atwater Regional Wastewater Treatment Facility (hereinafter Facility), a Publicly Owned Treatment Works (POTW). The Discharger has contracted with Veolia Water North America – West, LLC to operate and maintain the Facility.

For the purposes of this Order, references to the "discharger" or "permittee" in applicable federal and state laws, regulations, plans, or policy are held to be equivalent to references to the Discharger herein.

B. The Discharger proposes to discharge disinfected tertiary treated wastewater to Peck/Atwater Drain. Peck/Atwater Drain is hydraulically connected to the San Joaquin River, a water of the United States, between Sack Dam and the mouth of the Merced River.

C. The Discharger filed a report of waste discharge and submitted an application for Waste Discharge Requirements (WDRs) and a National Pollutant Discharge Elimination System (NPDES) permit on 4 August 2009. Supplemental information was requested on 16 February 2010 and received on 1 July 2010.

II. FACILITY DESCRIPTION

The design daily average flow capacity of the Facility is 6.0 million gallons per day (mgd). The Discharger currently provides sewerage service for the City of Atwater, the unincorporated community of Winton, the Federal Bureau of Prisons-Atwater, and the Castle Airport Aviation and Development Center, and serves a population of approximately 40,000. Wastewater is currently treated at the Atwater Wastewater Treatment Plant, which is regulated by WDRs Order No. R5-2007-0063 (NPDES Permit No. CA0079197) and is approximately 6 miles north-northwest from the new Facility. The Discharger intends to decommission the Atwater Wastewater Treatment Plant when the new Facility begins operations.

A. Description of Wastewater and Biosolids Treatment or Controls

The treatment system at the Facility will consist of headworks with screens and a vortex grit removal system, two oxidation ditches, three secondary clarifiers, three cloth media tertiary filters, and an ultraviolet light disinfection system. Sludge wasted from the secondary clarifiers will be sent to a return activated sludge pump station and will either be recycled within the system as return activated sludge (RAS) or wasted from the system as waste activated sludge (WAS). RAS will be pumped back to the oxidation ditches. WAS will be pumped to two concrete aerobic digesters. Supernatant from the digesters will be conveyed to the headworks of the Facility. Stabilized biosolids will be pumped to temporary holding tanks prior to mechanical dewatering. Mechanically dewatered biosolids will be transferred to an onsite drying/storage area and/or hauled offsite to a disposal facility (either a land application site or a landfill).

The Facility will also include an unlined, onsite stormwater retention pond that will be used to collect all stormwater runoff from the Facility. The Discharger also proposes to use the pond as an emergency storage basin to divert wastewater from the treatment facility in case of an emergency and/or treated effluent that does not meet effluent limitations. The Discharger also proposes to empty the basin of any and all wastewater prior to the onset of a major rainfall event if there is a threat of a flood event in Bear Creek. No additional wastewater will be directed to the basin until the potential for a flooding event has passed.

B. Discharge Points and Receiving Waters

1. The Facility is located in Section 35, T7S, R12E, MDB&M, as shown in Attachment B, a part of this Order.

2. Treated municipal wastewater will be discharged at Discharge Point 001 to Peck/Atwater Drain, which is hydraulically connected to the San Joaquin River, a water of the United States, between Sack Dam and the mouth of the Merced River. Treated municipal wastewater will be discharged at a point latitude 37° 16’ 49” N and longitude 120° 38’ 00” W.

3. Discharges from the Facility at Discharge Point 001 to Peck/Atwater Drain will be approximately 6 miles downstream from the discharge point for the existing Atwater Wastewater Treatment Plant (to be decommissioned). The Discharger filed a petition with the State Water Resources Control Board (State Water Board) for a change in the point of discharge, which was approved on 22 July 2010.

4. Peck Drain is a man-made, unlined channel constructed to convey water from Atwater Drain to Joseph Gallo Farms (Gallo Ranch). Atwater Drain empties into Peck Drain at the eastern boundary of the Gallo Ranch property just south of State Route 140 and along Bert Crane Road. The historic alignment of Atwater Drain is abandoned at this location. Peck Drain rejoins the original Atwater Drain alignment on the southwest side of Gallo Ranch. Beyond Gallo Ranch, Atwater Drain borders a few large agricultural parcels and two managed wetland areas. Atwater Drain is also a man-made, unlined channel constructed by the Merced Irrigation District (MID) to dispose of groundwater pumped to lower the groundwater table in agricultural lands and was later modified to also collect and disperse agricultural tailwaters from surrounding properties, overflow from adjacent irrigation supply channels, and storm water drainage from the City of Atwater.

   MID maintains Atwater Drain under a contract with the City of Atwater. Its alignment parallels several major roads and is accessible to the public. Historically, it terminated with discharge to Bear Creek, a tributary to the San Joaquin River. Flows in Atwater Drain entered a siphon under the East Side Canal prior to discharging to Bear Creek. Today, Atwater Drain terminates approximately 0.6 miles upstream from the old siphon at the Arena Plains Unit of the Merced National Wildlife Refuge (Refuge), which is owned and operated by the U.S. Fish and Wildlife Service. The drain channel between its current terminus and the old siphon is filled with earth.

   Atwater Drain feeds wetland habitat on the Refuge. Natural surface water channels convey water from the wetland habitat to the southwest corner of the Refuge, which is bounded by a levee. A breach in the levee allows the Refuge to exchange water with the East Side Canal. Water in the East Side Canal is periodically diverted to the San Joaquin River between Sack Dam and the mouth of the Merced River.

   The primary use of Peck Drain water is irrigation by Gallo Ranch. Gallo Ranch mixes water from Peck/Atwater Drain with MID water and pumped groundwater for

irrigation of fodder crops (e.g., corn and wheat) and sweet potatoes. The Discharger and the owners of Gallo Ranch have entered into an agreement wherein Gallo Ranch granted the Discharger an easement to flow its Facility effluent into Peck Drain in exchange for the right to all the wastewater discharged. Any water not extracted for use by Gallo Ranch flows to the Refuge.

C. Summary of Existing Requirements and Self-Monitoring Report (SMR) Data – Not Applicable

D. Compliance Summary – Not Applicable

E. Planned Changes – Not Applicable

III. APPLICABLE PLANS, POLICIES, AND REGULATIONS

The requirements contained in this Order are based on the applicable plans, policies, and regulations identified in the Findings in section II of this Order. The applicable plans, policies, and regulations relevant to the discharge include the following:

A. Legal Authorities

This Order is issued pursuant to regulations in the Clean Water Act (CWA) and the California Water Code (CWC) as specified in the Finding contained at section II.C of this Order.

B. California Environmental Quality Act (CEQA)

The Discharger certified a final environmental impact report (EIR) for the Facility in accordance with CEQA (Public Resources Code section 21000, et seq.) on 22 September 2008. The final EIR identified two significant and unavoidable impacts to the receiving water quality and the plants and wildlife in the Refuge. The first impact is regarding the possibility that lead concentrations in the effluent may cause an exceedance of CTR aquatic life protection criteria. The second impact is about the potential for the discharge to increase summer flooding of vernal pools in the Refuge and, in turn, adversely affect the plants and wildlife the vernal pools support. Both impacts were considered significant and unavoidable not because the impacts will likely never be reduced to a less-than-significant level, but because of the uncertainty and variability of existing tertiary treatment systems in removing lead and the uncertainty and complexity of the existing hydrological conditions in Atwater Drain. In accordance with Title 14, California Code of Regulations (CCR), Section 15093, the Discharger adopted a Statement of Overriding Considerations on 22 September 2008 citing specific social, environmental, and economic benefits that outweigh the significant and unavoidable water quality impact.

This Order includes effluent limitations for lead that are protective of aquatic life, as described in Section IV.C.3 of this Fact Sheet. As the responsible agency for water quality in the Central Valley under CEQA, Central Valley Water Board independent review determines that the Facility as approved by the Discharger and operated in

compliance with this Order will not have a significant effect on water quality. This Order imposes enforceable requirements, including monitoring of effluent and receiving water, to ensure that the discharge will not have a significant effect on water quality. This Order meets the requirements of CEQA as specified in the Finding contained at section II.E of this Order.

Under CWC section 13389, this action to adopt a NPDES permit is exempt from the provisions of CEQA, Public Resources Code sections 21100-21177.

C. State and Federal Regulations, Policies, and Plans

1. **Water Quality Control Plans.** This Order implements the following water quality control plan as specified in the Finding contained at section II.H of this Order.

   a. *Water Quality Control Plan for the Sacramento River and San Joaquin River Basins*, Fourth Edition, revised September 2009(Basin Plan).

2. **National Toxics Rule (NTR) and California Toxics Rule (CTR).** This Order implements the NTR and CTR as specified in the Finding contained at section II.I of this Order.

3. **State Implementation Policy (SIP).** This Order implements the SIP as specified in the Finding contained at section II.J of this Order.

4. **Alaska Rule.** This Order is consistent with the Alaska Rule as specified in the Finding contained at section II.L of this Order.

5. **Antidegradation Policy.** As specified in the Finding contained at section II.N of this Order and as discussed in detail in the Fact Sheet (Attachment F, Section IV.E.4.), the discharge is consistent with the antidegradation provisions of 40 CFR 131.12 and State Water Board Resolution No. 68-16.

6. **Anti-Backsliding Requirements.** This Order is consistent with anti-backsliding policies as specified in the Finding contained at section II.O of this Order. Compliance with the anti-backsliding requirements is discussed in the Fact Sheet (Attachment F, Section IV.E.3).

7. **Emergency Planning and Community Right to Know Act.** Section 13263.6(a) of the CWC, requires that "*[t]he regional board shall prescribe effluent limitations as part of the waste discharge requirements of a POTW for all substances that the most recent toxic chemical release data reported to the state emergency response commission pursuant to Section 313 of the Emergency Planning and Community Right to Know Act of 1986 (42 U.S.C. Sec. 11023) [EPCRA] indicate as discharged into the POTW, for which the state board or the regional board has established numeric water quality objectives, and has determined that the discharge is or may be discharged at a level which will cause, have the reasonable potential to cause, or contribute to, an excursion above any numeric water quality objective*".

As this is a new discharge, no toxic chemical release data has been reported to the State emergency response commission. Therefore, a reasonable potential analysis based on information from the EPCRA cannot be conducted.

However, as detailed elsewhere in this Order, available effluent and receiving water data from the Atwater Wastewater Treatment Plant indicate that there may be constituents present in the effluent and receiving water that have a reasonable potential to cause or contribute to exceedances of water quality standards and require inclusion of effluent limitations based on federal and state laws and regulations.

8. **Storm Water Requirements.** USEPA promulgated federal regulations for storm water on 16 November 1990 in 40 CFR Parts 122, 123, and 124. The NPDES Industrial Storm Water Program regulates storm water discharges from wastewater treatment facilities. Wastewater treatment facilities are applicable industries under the storm water program and are obligated to comply with the federal regulations. The Discharger will capture all storm water from the process areas, chemical storage facilities, and parking lots. All collected storm water will be conveyed to the emergency storage basin. The basin is not designed to be protected from inundation or washout due to flooding in Bear Creek that occurs with a 100-year return frequency. Therefore, during an extreme flooding event, storm water could be discharged to Bear Creek. The Discharger must submit a Notice of Intent for coverage under the State Water Board's Industrial Storm water General Order No. 97-03-DWQ.Therefore, this Order does not regulate the discharge of storm water to waters of the United States.

9. **Endangered Species Act.** This Order is consistent with the Endangered Species Act as specified in the Finding contained at section II.P of this Order.

D. Impaired Water Bodies on CWA 303(d) List

1. Under section 303(d) of the 1972 CWA, states, territories, and authorized tribes are required to develop lists of water quality limited segments. The waters on these lists do not meet water quality standards, even after point sources of pollution have installed the minimum required levels of pollution control technology. On 11 October 2011, USEPA gave final approval to California's 2008-2010Section 303(d) List of Water Quality Limited Segments. The Basin Plan references this list of Water Quality Limited Segments (WQLSs), which are defined as "…*those sections of lakes, streams, rivers or other fresh water bodies where water quality does not meet (or is not expected to meet) water quality standards even after the application of appropriate limitations for point sources (40 CFR Part 130, et seq.)*." The Basin Plan also states, "*Additional treatment beyond minimum federal requirements will be imposed on dischargers to [WQLSs]. Dischargers will be assigned or allocated a maximum allowable load of critical pollutants so that water quality objectives can be met in the segment*." Peck/Atwater Drainis not listed as a WQLS in the 2008-2010 303(d) List of WQLSs. However, Peck/Atwater Drain is hydraulically connected to the San Joaquin River between Bear Creek and the mouth of the Merced River. Segments of the San Joaquin River between Sack Dam and the mouth of the

Merced River are listed as WQLSs in the 2008-2010 303(d) list for arsenic, boron, chlorpyrifos, DDT, diazinon, EC, E. coli, Group A pesticides, mercury, selenium, and unknown toxicity. This Order includes monitoring requirements for all of these pollutants, except for E. coli, and includes an effluent limitation for EC. This Order requires the Discharger to monitor the effluent for total coliform and includes effluent limitations for total coliform.

2. **Total Maximum Daily Loads (TMDLs).**USEPA requires the Central Valley Water Board to develop TMDLs for each 303(d) listed pollutant and water body combination. TMDLs on the Lower San Joaquin River have been established for chlorpyrifos, diazinon, selenium, boron, and EC.

   a. The Basin Plan includes waste load allocations for diazinon and chlorpyrifos applicable to all NPDES dischargers that discharge directly or indirectly to the lower San Joaquin River. This Order includes monitoring requirements for these constituents and requires the Discharger to report its findings relative to the waste load allocation. The monitoring data collected during the term of this Order will be analyzed to determine whether final WQBELs are necessary to achieve water quality standards. As sales of all non-agricultural uses of diazinon have been banned since 31 December 2004 and the majority of non-agricultural uses of chlorpyrifos have been banned since December 2001, it is not expected that discharges from the Facility will exceed water quality objectives or the waste load allocation. Water quality data collected to date confirm this, as the influent, effluent, and receiving water data from the Atwater Wastewater Treatment Plant have all been non-detect. However, the water quality data are limited and further data are necessary for the Central Valley Water Board to confirm whether the discharge has reasonable potential to cause an exceedance of the waste load allocation. If further data demonstrate that the discharge has reasonable potential to cause an exceedance of the waste load allocation, final effluent limitations for diazinon and chlorpyrifos will be established consistent with the Basin Plan waste load allocation in the subsequent NPDES permit renewal.

   b. A selenium TMDL for the Lower San Joaquin River was approved by the USEPA on 28 March 2002. However, there are no point sources of selenium in the lower San Joaquin River basin, so there is no waste load allocation. The Basin Plan includes water quality objectives for total selenium applicable to the San Joaquin River between Sack Dam and the mouth of the Merced River. This Order includes effluent and receiving water monitoring for California Toxics Rule constituents, which includes selenium.

   c. The Basin Plan contains a TMDL for salt and boron applicable to the Discharger (*Control Program for Salt and Boron Discharges into the Lower San Joaquin River*) (Salt and Boron TMDL). It identifies existing NPDES point source dischargers as a low priority. Compliance dates for low priority dischargers are contained in Table IV-4.3 of the Basin Plan. Low priority dischargers are not required to be in compliance during wet through dry years for 16 years and 20 years during critical years, starting from the effective date of the control program [28 July 2006]. At that time, the discharge must not exceed the water

quality objectives for EC that apply to the San Joaquin River at Vernalis. Generally, discharges must not exceed an EC of 700 µmhos/cm from 1 April through 31 August and 1,000 µmhos/cm from 1 September through 31 March.

This Order includes a performance-based effluent limitation for EC of 700 µmhos/cm. Further discussion of this effluent limitation is included in section IV.D of this Fact Sheet.

3. The 303(d) listings and TMDLs have been considered in the development of this Order. A pollutant-by-pollutant evaluation of each pollutant of concern is described in section IV.C.3. of this Fact Sheet.

E. Other Plans, Polices and Regulations

1. The discharge authorized herein and the treatment and storage facilities associated with the discharge of treated municipal wastewater, except for discharges of residual sludge and solid waste, are exempt from the requirements of Title 27, CCR, section 20005 *et seq* (hereafter Title 27). The treatment facilities include an onsite storm water pond, which the Discharger proposes to also use as an emergency storage basin. The exemption, pursuant to Title 27, CCR, section 20090(a), is based on the following:

a. The waste consists primarily of domestic sewage and treated effluent;

b. The waste discharge requirements are consistent with water quality objectives; and

c. The treatment and storage facilities described herein are associated with a municipal wastewater treatment plant.

IV. RATIONALE FOR EFFLUENT LIMITATIONS AND DISCHARGE SPECIFICATIONS

Effluent limitations and toxic and pretreatment effluent standards established pursuant to sections 301 (Effluent Limitations), 302 (Water Quality Related Effluent Limitations), 304 (Information and Guidelines), and 307 (Toxic and Pretreatment Effluent Standards) of the CWA and amendments thereto are applicable to the discharge.

The CWA mandates the implementation of effluent limitations that are as stringent as necessary to meet water quality standards established pursuant to state or federal law [33 U.S.C. §1311(b)(1)(C); 40 CFR 122.44(d)(1)]. NPDES permits must incorporate discharge limits necessary to ensure that water quality standards are met. This requirement applies to narrative criteria as well as to criteria specifying maximum amounts of particular pollutants. Pursuant to federal regulations, 40 CFR 122.44(d)(1)(i), NPDES permits must contain limits that control all pollutants that "*are or may be discharged at a level which will cause, have the reasonable potential to cause, or contribute to an excursion above any State water quality standard, including State narrative criteria for water quality*." Federal regulations, 40 CFR 122.44(d)(1)(vi), further provide that "*[w]here a State has not established a water quality criterion for a specific chemical pollutant that is present in an*

effluent at a concentration that causes, has the reasonable potential to cause, or contributes to an excursion above a narrative criterion within an applicable State water quality standard, the permitting authority must establish effluent limits."

The CWA requires point source dischargers to control the amount of conventional, non-conventional, and toxic pollutants that are discharged into the waters of the United States. The control of pollutants discharged is established through effluent limitations and other requirements in NPDES permits. There are two principal bases for effluent limitations in the Code of Federal Regulations: 40 CFR 122.44(a) requires that permits include applicable technology-based limitations and standards; and 40 CFR 122.44(d) requires that permits include WQBELs to attain and maintain applicable numeric and narrative water quality criteria to protect the beneficial uses of the receiving water where numeric water quality objectives have not been established. The Basin Plan at page IV-17.00contains an implementation policy, "*Policy for Application of Water Quality Objectives*", that specifies that the Central Valley Water Board "*will, on a case-by-case basis, adopt numerical limitations in orders which will implement the narrative objectives*." This policy complies with 40 CFR 122.44(d)(1). With respect to narrative objectives, the Central Valley Water Board must establish effluent limitations using one or more of three specified sources, including: (1) USEPA's published water quality criteria, (2) a proposed state criterion (i.e., water quality objective) or an explicit state policy interpreting its narrative water quality criteria (i.e., the Central Valley Water Board's "*Policy for Application of Water Quality Objectives*")(40 CFR 122.44(d)(1)(vi)(A), (B) or (C)), or (3) an indicator parameter.

The Basin Plan includes numeric site-specific water quality objectives and narrative objectives for toxicity, chemical constituents, discoloration, radionuclides, and tastes and odors. The narrative toxicity objective states: "*All waters shall be maintained free of toxic substances in concentrations that produce detrimental physiological responses in human, plant, animal, or aquatic life*." (Basin Plan at III-8.01) The Basin Plan states that material and relevant information, including numeric criteria, and recommendations from other agencies and scientific literature will be utilized in evaluating compliance with the narrative toxicity objective. The narrative chemical constituents objective states that waters shall not contain chemical constituents in concentrations that adversely affect beneficial uses. At minimum, "…*water designated for use as domestic or municipal supply (MUN) shall not contain concentrations of chemical constituents in excess of the maximum contaminant levels (MCLs)*…" in Title 22 of the CCR. The Basin Plan further states that, to protect all beneficial uses, the Central Valley Water Board may apply limits more stringent than MCLs. The narrative tastes and odors objective states: *"Water shall not contain taste- or odor-producing substances in concentrations that impart undesirable tastes or odors to domestic or municipal water supplies or to fish flesh or other edible products of aquatic origin, or that cause nuisance, or otherwise adversely affect beneficial uses*."

A. Discharge Prohibitions

1. Prohibition III.A concerns a change in manner or location of the discharge, or a change in its character, from what was provided in the Report of Waste Discharge (RWD) and evaluated for compliance with the CWC and CWA.

2. Prohibition III.B prohibits bypass pursuant to 40 CFR 122.41(m)(4), with federal allowance for exceptions set forth in Section I.G. of Attachment D, Federal Standard Provisions. It also prohibits overflows, which concerns release of untreated and partially treated wastewater to surface waters and/or groundwater.

3. Prohibition III.C is based on Basin Plan water quality objectives and State Water Board Resolution No. 68-16, which prohibit conditions that create pollution or a nuisance. Prohibition III.C also reflects general situations that, if created, justify cleanup or abatement enforcement activities and assessment of administrative civil liabilities.

4. Prohibition III.D incorporates prohibitions set forth in the Basin Plan and not covered by the preceding prohibitions.

5. Prohibition III.E concerns two categories of waste that are subject to full containment as prescribed by Title 23 and Title 27 of the CCR and, if discharged, have high potential for creating a condition that would violate Prohibition III.C as well.

B. Technology-Based Effluent Limitations

1. Scope and Authority

Section 301(b) of the CWA and implementing USEPA permit regulations at 40 CFR 122.44 require that permits include conditions meeting applicable technology-based requirements at a minimum, and any more stringent effluent limitations necessary to meet applicable water quality standards. The discharge authorized by this Order must meet minimum federal technology-based requirements based on Secondary Treatment Standards at 40 CFR Part 133 and Best Professional Judgment (BPJ) in accordance with 40 CFR 125.3.

Regulations promulgated in 40 CFR 125.3(a)(1) require technology-based effluent limitations for municipal dischargers to be placed in NPDES permits based on Secondary Treatment Standards or Equivalent to Secondary Treatment Standards.

The Federal Water Pollution Control Act Amendments of 1972 (PL 92-500) established the minimum performance requirements for POTWs [defined in section 304(d)(1)]. Section 301(b)(1)(B) of that Act requires that such treatment works must, as a minimum, meet effluent limitations based on secondary treatment as defined by the USEPA Administrator.

Based on this statutory requirement, USEPA developed secondary treatment regulations, which are specified in 40 CFR Part 133. These technology-based regulations apply to all municipal wastewater treatment plants and identify the minimum level of effluent quality attainable by secondary treatment in terms of 5-day biochemical oxygen demand (BOD_5), total suspended solids (TSS), and pH.

2. Applicable Technology-Based Effluent Limitations

a. BOD_5 and TSS. Federal regulations, 40 CFR Part 133, establish the minimum weekly and monthly average level of effluent quality attainable by secondary treatment for BOD_5 and TSS. Tertiary treatment is necessary to protect the beneficial uses of the receiving stream and the final effluent limitations for BOD_5 and TSS are based on the technical capability of the tertiary process. BOD_5 is a measure of the amount of oxygen used in the biochemical oxidation of organic matter. The secondary and tertiary treatment standards for BOD_5 and TSS are indicators of the effectiveness of the treatment processes. The principal design parameter for wastewater treatment plants is the daily BOD_5 and TSS loading rates and the corresponding removal rate of the system. In applying 40 CFR Part 133 for weekly and monthly average BOD_5 and TSS limitations, the application of tertiary treatment processes results in the ability to achieve lower levels for BOD_5 and TSS than the secondary standards currently prescribed; the 30-day average BOD_5 and TSS limitations have been revised to 10 mg/L, which is technically based on the capability of a tertiary system. In addition to the average weekly and average monthly effluent limitations, a daily maximum effluent limitation for BOD_5 and TSS is included in the Order to ensure that the treatment works are not organically overloaded and operate in accordance with design capabilities. In addition, 40 CFR 133.102, in describing the minimum level of effluent quality attainable by secondary treatment, states that the 30-day average percent removal shall not be less than 85 percent. If 85 percent removal of BOD_5 and TSS must be achieved by a secondary treatment plant, it must also be achieved by a tertiary (i.e., treatment beyond secondary level) treatment plant. This Order contains a limitation requiring an average of 90 percent removal of BOD_5 and TSS over each calendar month. This Order requires Water Quality Based Effluent Limitations (WQBELs) that are equal to or more stringent than the secondary technology-based treatment described in 40 CFR Part 133. (See section IV.C.3.e.vii. of this Fact Sheet for the discussion on Pathogens which includes WQBELs for BOD_5 and TSS and BOD_5 and TSS percent removal.)

b. Flow. The Facility was designed to provide a tertiarylevel of treatment for up to a design flow of 6.0 mgd. Therefore, this Order contains an average dry weather discharge flow effluent limitation of 6.0 mgd.

c. pH. The secondary treatment regulations at 40 CFR Part 133 also require that pH be maintained between 6.0 and 9.0 standard units.

Summary of Applicable Technology-based Effluent Limitations
Discharge Point 001

Table F-2. Summary of Applicable Technology-based Effluent Limitations

Parameter	Units	Effluent Limitations				
		Average Monthly	Average Weekly	Maximum Daily	Instantaneous Minimum	Instantaneous Maximum
Biochemical Oxygen Demand (BOD) 5-day @ 20°C	mg/L	30	45	--	--	--

Parameter	Units	Effluent Limitations				
		Average Monthly	Average Weekly	Maximum Daily	Instantaneous Minimum	Instantaneous Maximum
Total Suspended Solids (TSS)	mg/L	30	45	--	--	--
pH	standard units	--	--	--	6.0	9.0

a. **Average Dry Weather Flow.** The average dry weather daily discharge flow shall not exceed 6.0 mgd.

b. **Percent Removal.** The average monthly percent removal of 5-day biochemical oxygen demand (BOD_5) and total suspended solids (TSS) shall not be less than 85 percent.

C. Water Quality-Based Effluent Limitations (WQBELs)

1. Scope and Authority

Section 301(b) of the CWA and 40 CFR 122.44(d) require that permits include limitations more stringent than applicable federal technology-based requirements where necessary to achieve applicable water quality standards. This Order contains requirements, expressed as a technology equivalence requirement, more stringent than secondary treatment requirements that are necessary to meet applicable water quality standards. The rationale for these requirements, which consist of tertiary treatment or equivalent requirements or other provisions, is discussed in section IV.B. of this Fact Sheet.

40 CFR 122.44(d)(1)(i) mandates that permits include effluent limitations for all pollutants that are or may be discharged at levels that have the reasonable potential to cause or contribute to an exceedance of a water quality standard, including numeric and narrative objectives within a standard. Where reasonable potential has been established for a pollutant, but there is no numeric criterion or objective for the pollutant, WQBELs must be established using: (1) USEPA criteria guidance under CWA section 304(a), supplemented where necessary by other relevant information; (2) an indicator parameter for the pollutant of concern; or (3) a calculated numeric water quality criterion, such as a proposed state criterion or policy interpreting the state's narrative criterion, supplemented with other relevant information, as provided in 40 CFR 122.44(d)(1)(vi).

The process for determining reasonable potential and calculating WQBELs when necessary is intended to protect the designated uses of the receiving water as specified in the Basin Plan, and achieve applicable water quality objectives and criteria that are contained in other state plans and policies, or any applicable water quality criteria contained in the CTR and NTR.

2. Applicable Beneficial Uses and Water Quality Criteria and Objectives

The Basin Plan designates beneficial uses, establishes water quality objectives, and contains implementation programs and policies to achieve those objectives for all

waters addressed through the plan. In addition, the Basin Plan implements State Water Board Resolution No. 88-63, which established state policy that all waters, with certain exceptions, should be considered suitable or potentially suitable for municipal or domestic supply.

The Basin Plan on page II-1.00 states: "*Protection and enhancement of existing and potential beneficial uses are primary goals of water quality planning…*" and with respect to disposal of wastewaters states that "...*disposal of wastewaters is [not] a prohibited use of waters of the State; it is merely a use which cannot be satisfied to the detriment of beneficial uses.*"

The federal CWA section 101(a)(2), states: "*it is the national goal that wherever attainable, an interim goal of water quality which provides for the protection and propagation of fish, shellfish, and wildlife and provides for recreation in and on the water be achieved by July 1, 1983.*" Federal regulations, developed to implement the requirements of the CWA, create a rebuttable presumption that all waters be designated as fishable and swimmable. Federal regulations, 40 CFR sections 131.2 and 131.10, require that all waters of the State be regulated to protect the beneficial uses of public water supply, protection and propagation of fish, shell fish and wildlife, recreation in and on the water, agricultural, industrial and other purposes including navigation.Federal regulation, 40 CFR 131.3(e), defines existing beneficial uses as those uses actually attained after 28 November 1975, whether or not they are included in the water quality standards. Federal regulation, 40 CFR 131.10, requires that uses be obtained by implementing effluent limitations, requires that all downstream uses be protected and states that in no case shall a state adopt waste transport or waste assimilation as a beneficial use for any waters of the United States.

a. **Receiving Water and Beneficial Uses.** As described in Section II.B.3 of this Fact Sheet, Peck Drain is a man-made extension of Atwater Drain, which is also a man-made channel. During a 12 June 2001 inspection, Central Valley Water Board staff observed humans harvesting crayfish and frogs from Atwater Drain. On a 29 June 2005 reconnaissance inspection of Atwater Drain, Central Valley Water Board staff observed crayfish, catfish, carp, and other unidentified fishes. Self-monitoring reports from March 2008 through December 2010 for the Atwater Wastewater Treatment Plant noted that Discharger staff observed fish, birds, frogs, crawdads, minnows, and crayfish in the Atwater Drain. It is not appropriate to use the tributary rule to determine the beneficial uses of Peck/Atwater Drain because it is a man-made storm and agricultural drain. Given the flow conditions, the beneficial uses actually attained in Peck/Atwater Drain since 1975, information in the case file, and information submitted by the Discharger, the beneficial uses applicable to Peck/Atwater Drain are listed in Table F-3, below. Municipal and domestic supply (MUN) is applied in accordance with the Basin Plan, which states that water bodies that do not have beneficial uses designated in Table II-1 are assigned MUN designations. Agricultural supply (AGR) is applied because, as described previously, water in Peck/Atwater Drain is diverted to Gallo Ranch for irrigation use. The beneficial use category of agricultural supply includes irrigation of crops for direct human consumption,

otherwise known as unrestricted irrigation use. Water contact recreation (REC-1) is applicable because sections of Peck/Atwater Drain are accessible to the public and the people who harvest aquatic life such as frogs and crayfish from the Drain have body contact with the water. Warm freshwater habitat (WARM) is applicable because information available shows Peck/Atwater Drain supports warm freshwater aquatic life. Wildlife habitat (WILD) is applied because Peck/Atwater Drain provides water that supports wetland ecosystems and wildlife within its reaches and in the Wildlife Refuge. Groundwater recharge (GWR) is applicable because in areas where groundwater elevations are below the invert of Peck/Atwater Drain, water conveyed in the Drain will percolate to groundwater.

Groundwater underlying the Facility and the discharge point is in the El Nido-Stevinson Detailed Analysis Unit (DAU) No. 212. The beneficial uses of groundwater for this DAU are designated in the Basin Plan and listed in Table F-3 below.

Table F-3. Basin Plan Beneficial Uses

Discharge Point	Receiving Water Name	Beneficial Use(s)
001	Peck/Atwater Drain	MUN, AGR, REC-1,WARM, WILD,GWR
--	Groundwater	MUN, AGR, industrial service supply (IND), industrial process supply (PRO)

b. **Effluent and Ambient Background Data.**The reasonable potential analysis (RPA), as described in section IV.C.3 of this Fact Sheet, was based on effluent and ambient background data collected from the AtwaterWastewater Treatment Plant between January 2008 and December 2010, which includes data submitted in SMRs. Information in the RWD for the Facility and the December 2009 *Hardness Study Report*(Hardness Study) were also used in conducting the RPA.

c. **Assimilative Capacity/Mixing Zone.** Based on the available information, the worst-case dilution for Peck/Atwater Drain is assumed to be zero at the point of discharge to provide protection for the receiving water beneficial uses. The impact of assuming zero dilution/assimilative capacity within the receiving water is that the effluent limitations are end-of-pipe limitations with no allowance for dilution within the receiving water.

d. **Conversion Factors.** The CTR contains aquatic life criteria for arsenic, cadmium, chromium III, chromium VI, copper, lead, nickel, silver, and zinc which are presented in dissolved concentrations. USEPA recommends conversion factors to translate dissolved concentrations to total concentrations. The default USEPA conversion factors contained in Appendix 3 of the SIP were used to convert the applicable dissolved criteria to total recoverable criteria.

e. **Hardness-Dependent CTR Metals Criteria.** The *California Toxics Rule* and the *National Toxics Rule* contain water quality criteria for seven metals that vary as a function of hardness. The lower the hardness, the lower the water quality criteria. The metals with hardness-dependent criteria include cadmium, copper, chromium III, lead, nickel, silver, and zinc.

This Order has established the criteria for hardness-dependent metals based on the reasonable worst-case ambient hardness as required by the SIP[1], the CTR[2] and State Water Board Order No. WQ 2008-0008 (City of Davis). The SIP and the CTR require the use of "receiving water" or "actual ambient" hardness, respectively, to determine effluent limitations for these metals. (SIP § 1.2; 40 CFR 131.38(c)(4)) The CTR does not define whether the term "ambient," as applied in the regulations, necessarily requires the consideration of upstream as opposed to downstream hardness conditions. The State Water Board allows that where reliable, representative data are available, the hardness value for calculating criteria can be the downstream receiving water hardness, after mixing with the effluent. (Order WQ 2008-0008, p. 11) The Central Valley Water Board thus has considerable discretion in determining ambient hardness as long as the hardness values are protective under all flow conditions. (*Id.*, pp.10-11) Guidance on the selection of the appropriate ambient hardness was provided by the State Water Board in Order No. WQ 2008-0008 (City of Davis).

As discussed below, scientific literature provides a reliable method for calculating protective hardness-dependent CTR criteria, considering all discharge conditions. This methodology produces hardness-dependent CTR criteria based on the reasonable worst-case downstream ambient hardness that ensure these metals do not cause receiving water toxicity under any downstream receiving water condition. Under this methodology, the Central Valley Water Board considers all hardness conditions that could occur in the ambient downstream receiving water after the effluent has mixed with the water body. This ensures that effluent limitations are fully protective of aquatic life in all areas of the receiving water affected by the discharge under all flow conditions, at the fully mixed location, and throughout the water body including at the point of discharge into the water body.

As part of the 2009 Hardness Study, the Discharger collected effluent samples priorto the addition of calcium thiosulfate (dechlorination) to determine what the hardness of the effluent from the new Facility would be. The Discharger also calculated hardness values of the new upstream receiving water location. These hardness values were used in conducting the reasonable potential analysis and calculating water quality based effluent limitations.

i. Conducting the Reasonable Potential Analysis (RPA). The SIP in Section 1.3 states, "*The RWQCB shall…determine whether a discharge may: (1) cause, (2) have a reasonable potential to cause, or (3) contribute to an excursion above any applicable priority pollutant criterion or objective.*" Section 1.3 provides a step-by-step procedure for conducting the RPA. The

[1] The SIP does not address how to determine the hardness for application to the equations for the protection of aquatic life when using hardness-dependent metals criteria. It simply states, in Section 1.2, that the criteria shall be properly adjusted for hardness using the hardness of the receiving water.

[2] The CTR requires that, for waters with a hardness of 400 mg/L (as $CaCO_3$), or less, the actual ambient hardness of the surface water must be used. It further requires that the hardness values used must be consistent with the design discharge conditions for design flows and mixing zones.

procedure requires the comparison of the Maximum Effluent Concentration (MEC) and Maximum Ambient Background Concentration to the applicable criterion that has been properly adjusted for hardness. Unless otherwise noted, for the hardness-dependent CTR metals criteria the following procedures were followed for properly adjusting the criterion for hardness when conducting the RPA.

a) The SIP requires a WQBEL if the MEC exceeds the applicable criterion, adjusted for hardness. For comparing the MEC to the applicable criterion, the "fully mixed" reasonable worst-case downstream ambient hardness was used to adjust the criterion. In this evaluation, the portion of the receiving water affected by the discharge is analyzed. For hardness-dependent criteria, the hardness of the effluent has an impact on the determination of the applicable criterion in areas in the receiving water affected by the discharge. Therefore, for comparing the MEC to the applicable criterion, the reasonable worst-case downstream ambient hardness was used to adjust the criterion. For this situation, it is necessary to consider the hardness of the effluent in determining the applicable hardness to adjust the criterion. The procedures for determining the applicable criterion after proper adjustment using the reasonable worst-case downstream hardness is outlined in subsection ii, below.

b) The SIP requires a WQBEL if the receiving water is impaired upstream (outside the influence) of the discharge, i.e., if the Maximum Ambient Background Concentration of a pollutant exceeds the applicable criterion, adjusted for hardness[3]. For comparing the Maximum Ambient Background Concentration to the applicable criterion, the reasonable worst-case upstream ambient hardness was used to adjust the criteria. This is appropriate, because this area is outside the influence of the discharge. Since the discharge does not impact the upstream hardness, the effect of the effluent hardness was not included in this evaluation.

ii. Calculating Water Quality-Based Effluent Limitations. The remaining discussion in this section relates to the development of water quality-based effluent limitations (WQBELs) when it has been determined that the discharge has reasonable potential to cause or contribute to an exceedance of the CTR hardness-dependent metals criteria in the receiving water.

A 2006 Study[4] developed procedures for calculating the effluent concentration allowance (ECA)[5] for CTR hardness-dependent metals. The 2006 Study demonstrated that it is necessary to evaluate all discharge

[3] The pollutant must also be detected in the effluent.
[4] Emerick, R.W.; Borroum, Y.; & Pedri, J.E., 2006. California and National Toxics Rule Implementation and Development of Protective Hardness Based Metal Effluent Limitations. WEFTEC, Chicago, Ill.
[5] The ECA is defined in Appendix 1 of the SIP (page Appendix 1-2). The ECA is used to calculate water quality-based effluent limitations in accordance with Section 1.4 of the SIP.

conditions (e.g., high and low flow conditions) and the hardness and metals concentrations of the effluent and receiving water when determining the appropriate ECA for these hardness-dependent metals. This method is superior to relying on downstream receiving water samples alone because it captures all possible mixed conditions in the receiving water. Both receiving water and effluent hardness vary based on flow and other factors, but the variability of receiving water and effluent hardness is sometimes independent. Using a calculated hardness value ensures that the Central Valley Water Board considers all possible mixed downstream values that may result from these two independent variables. Relying on receiving water sampling alone is less likely to capture all possible mixed downstream conditions.

The equation describing the total recoverable regulatory criterion, as established in the CTR[6], is as follows:

$$\text{CTR Criterion} = \text{WER} \times (e^{m[\ln(H)]+b}) \qquad \text{(Equation 1)}$$

Where:

H = hardness (as $CaCO_3$)[7]
WER = water-effect ratio
m, b = metal- and criterion-specific constants

In accordance with the CTR, the default value for the WER is 1. A WER study must be conducted to use a value other than 1. The constants “m” and “b” are specific to both the metal under consideration, and the type of total recoverable criterion (i.e., acute or chronic). The metal-specific values for these constants are provided in the CTR at paragraph (b)(2), Table 1.

The equation for the ECA is defined in Section 1.4, Step 2, of the SIP and is as follows:

$$\text{ECA} = C \text{ (when } C \leq B)^{8} \qquad \text{(Equation 2)}$$

Where:

C = the priority pollutant criterion/objective, adjusted for hardness (see Equation 1, above)
B = the ambient background concentration

The 2006 Study demonstrated that the relationship between hardness and the calculated criteria is the same for some metals, so the same procedure for calculating the ECA may be used for these metals. The same procedure can

[6] 40 CFR 131.38(b)(2)
[7] For this discussion, all hardness values are in mg/L as $CaCO_3$.
[8] The 2006 Study assumes the ambient background metals concentration is equal to the CTR criterion (i.e., C ≤ B).

be used for chronic cadmium, chromium III, copper, nickel, and zinc. These metals are hereinafter referred to as "Concave Down Metals". "Concave Down" refers to the shape of the curve represented by the relationship between hardness and the CTR criteria in Equation 1. Another similar procedure can be used for determining the ECA for acute cadmium, lead, and acute silver, which are referred to hereafter as "Concave Up Metals".

ECA for Chronic Cadmium, Chromium III, Copper, Nickel, and Zinc – For Concave Down Metals (i.e., chronic cadmium, chromium III, copper, nickel, and zinc) the 2006 Study demonstrates that when the effluent is in compliance with the CTR criteria and the upstream receiving water is in compliance with the CTR criteria, any mixture of the effluent and receiving water will always be in compliance with the CTR criteria[9]. The 2006 Study proves that regardless of whether the effluent hardness is lower or greater than the upstream hardness, the reasonable worst-case flow condition is the effluent dominated condition (i.e., no receiving water flow)[10]. Consequently, for Concave Down Metals, the CTR criteria have been calculated using the downstream ambient hardness under this condition.

The effluent hardness ranged from 52 mg/L to 84 mg/L, based on 12 samples from June 2008 to May 2009. The calculated upstream receiving water hardness varied from 41 mg/L to 211 mg/L, based on 11 samples from June 2008 to May 2009. Downstream receiving water hardness values were not calculated.Under the effluent dominated condition, the reasonable worst-case downstream ambient hardness is 52 mg/L. As demonstrated in the example shown in Table F-4, below, using this hardness to calculate the ECA for all Concave Down Metals will result in water quality-based effluent limitations that are protective under all flow conditions, from the effluent dominated condition to high flow condition.This example for nickelassumes the following conservative conditions for the upstream receiving water:

- Upstream receiving water always at the lowest observed upstream receiving water hardness (i.e., 41 mg/L)
- Upstream receiving water nickel concentrations always at the CTR criteria (i.e., no assimilative capacity).

Using these reasonable worst-case receiving water conditions, a simple mass balance (as shown in Equation 3, below) accounts for all possible mixtures of effluent and receiving water under all flow conditions.

[9] 2006 Study, p. 5700

[10] There are two typographical errors in the 2006 Study in the discussion of Concave Down Metals when the effluent hardness is less than the receiving water hardness. The effluent and receiving water hardness were transposed in the discussion, but the correct hardness values were used in the calculations. The typographical errors were confirmed by the author of the 2006 Study, by email dated 1 April 2011, from Dr. Robert Emerick to Mr. James Marshall, Central Valley Water Board.

$$C_{MIX} = C_{RW} \times (1\text{-}EF) + C_{Eff} \times (EF) \qquad \text{(Equation 3)}$$

Where:

C_{MIX} = Mixed concentration (e.g., metals or hardness)
C_{RW} = Upstream receiving water concentration
C_{Eff} = Effluent concentration
EF = Effluent Fraction

In this example for nickel, for any receiving water flow condition (high flow to low flow), the fully mixed downstream ambient nickel concentration is in compliance with the CTR criteria[11].

Table F-4. Nickel ECA Evaluation

Lowest Observed Effluent Hardness	**52 mg/L**
Lowest Observed Upstream Receiving Water Hardness	**41 mg/L**
Highest Assumed Upstream Receiving Water Nickel Concentration	**25 µg/L[1]**
Nickel $ECA_{chronic}$[2]	**30 µg/L**

Effluent Fraction[6]		**Fully Mixed Downstream Ambient Concentration**			
		Hardness[3] (mg/L)	**CTR Criteria[4] (µg/L)**	**Nickel[5] (µg/L)**	**Complies with CTR Criteria?**
High Flow	1%	41.1	24.6	24.6	**Yes**
	5%	41.6	24.8	24.8	**Yes**
	15%	42.7	25.4	25.4	**Yes**
	25%	43.8	25.9	25.9	**Yes**
	50%	46.5	27.3	27.3	**Yes**
	75%	49.3	28.7	28.6	**Yes**
Low Flow	100%	52.0	30.0	30.0	**Yes**

[1] Highest assumed upstream receiving water nickel concentration calculated using Equation 1 for chronic criterion at a hardness of 41 mg/L.

[2] ECA calculated using Equation 1 for chronic criterion at a hardness of 52mg/L.

[3] Fully mixed downstream ambient hardness is the mixture of the receiving water and effluent hardness at the applicable effluent fraction using Equation 3.

[4] Fully mixed downstream ambient criteria are the chronic criteria calculated using Equation 1 at the mixed hardness.

[5] Fully mixed downstream ambient nickel concentration is the mixture of the receiving water and effluent nickel concentrations at the applicable effluent fraction using Equation 3.

[6] The effluent fraction ranges from 1% at the high receiving water flow condition, to 100% at the lowest receiving water flow condition (i.e., effluent dominated).

[11] This method considers the actual lowest upstream hardness and actual lowest effluent hardness to determine the reasonable worst-case ambient downstream hardness under all possible receiving water flow conditions.Table F-4 demonstrates that the receiving water is always in compliance with the CTR criteria at the fully mixed location in the receiving water. It also demonstrates that the receiving water is in compliance with the CTR criteria for all mixtures from the point of discharge to the fully-mixed location. Therefore, a mixing zone is not used for compliance.

In some instances, the receiving water may already contain concentrations of Concave Down Metals that exceed water quality criteria associated with the hardness condition before the discharge. The 2006 Study procedures remain applicable under these conditions. The discharge cannot cause or contribute to a violation of water quality criteria/objectives in the receiving water. Although metals concentrations downstream of the discharge exceed CTR criteria, the cause of the exceedance is not due to the discharge, it is due to the elevated metals concentrations upstream of the discharge. Implementing the procedures of the 2006 Study does not result in an increase in toxicity downstream of the discharge, and in fact reduces the amount of toxicity already present in the receiving water.

ECA for Acute Cadmium, Lead, and Acute Silver– For Concave Up Metals (i.e., acute cadmium, lead, and acute silver), the relationship between hardness and the metals criteria is different than for Concave Down Metals. The 2006 Study demonstrates that for Concave Up Metals, the effluent and upstream receiving water can be in compliance with the CTR criteria, but the resulting mixture may contain metals concentrations that exceed the CTR criteria and could cause toxicity. For these metals, the 2006 Study provides a mathematical approach to calculate the ECA that is protective of aquatic life, in all areas of the receiving water affected by the discharge, under all discharge and receiving water flow conditions (see Equation 4, below).

The ECA, as calculated using Equation 4, is based on the reasonable worst-case upstreamreceiving water hardness, the lowest observed effluent hardness, and assuming no receiving water assimilative capacity for metals (i.e., ambient background metals concentrations are at their respective CTR criterion). Equation 4 is not used in place of the CTR equation (Equation 1). Rather, Equation 4, which is derived using the CTR equation, is used as a direct approach for calculating the ECA. This replaces an iterative approach for calculating the ECA. The CTR equation has been used to evaluate the receiving water downstream of the discharge at all discharge and flow conditions to ensure the ECA is protective (e.g., see Table F-5).

$$ECA = \left(\frac{m(H_e - H_{rw})\left(e^{m\{\ln(H_{rw})\}+b}\right)}{H_{rw}} \right) + e^{m\{\ln(H_{rw})\}+b} \qquad \text{(Equation 4)}$$

Where:

m, b = criterion specific constants (from CTR)
H_e = lowest observed effluent hardness
H_{rw} = reasonable worst-case upstream receiving water hardness

In some instances, the receiving water may already contain concentrations of Concave Up Metals that exceed water quality criteria associated with the hardness condition previous to the discharge. The 2006 Study procedures remain applicable under these conditions. The discharge cannot cause or contribute to a violation of water quality criteria/objectives in the receiving water. Although metals concentrations downstream of the discharge exceed CTR criteria, the cause of the exceedance is not due to the discharge, it is due to the elevated metals concentrations upstream of the discharge. Implementing the procedures of the 2006 Study does not result in an increase in toxicity downstream of the discharge,and in fact reduces the amount of toxicity already present in the receiving water.

An example similar to the Concave Down Metals is shown for silver, a Concave Up Metal, in Table F-5, below. As previously mentioned, the lowest effluent hardness was52 mg/L, while the upstream receiving water hardness ranged from 41 mg/L to 211 mg/L. Downstream receiving water hardness was not calculated in the Hardness Study. For silver, the reasonable worst-case upstream receiving water hardness to use in Equation 4 to calculate the ECA is 41 mg/L. For acute cadmium, the reasonable worst-case upstream receiving water hardness used to calculate the ECA is 211 mg/L. For lead, the reasonable worst-case upstream receiving water hardness used to calculate the ECA is 115 mg/L.

Using the procedures discussed above to calculate the ECA for all Concave Up Metals will result in water quality-based effluent limitations that are protective under all potential effluent/receiving water flow conditions (high flow to low flow) and under all known hardness conditions, as demonstrated in Table F-5, for silver.

Table F-5. Silver ECA Evaluation

Lowest Observed Effluent Hardness	**52 mg/L**
Reasonable Worst-case Upstream Receiving Water Hardness	**41 mg/L**
Reasonable Worst-case Upstream Receiving Water Silver Concentration	**0.88 µg/L[1]**
Silver ECA_{acute}[2]	**1.3 µg/L**

Effluent Fraction[6]		**Fully Mixed Downstream Ambient Concentration**			
		Hardness[3] (mg/L)	**CTR Criteria[4] (µg/L)**	**Silver[5] (µg/L)**	**Complies with CTR Criteria?**
High Flow	1%	41.1	0.88	0.88	**Yes**
	5%	41.6	0.90	0.90	**Yes**
	15%	42.7	0.94	0.94	**Yes**
	25%	43.8	1.0	1.0	**Yes**
	50%	46.5	1.1	1.1	**Yes**
	75%	49.3	1.2	1.2	**Yes**
Low Flow	100%	52.0	1.3	1.3	**Yes**

[1] Reasonable worst-case upstream receiving water silver concentration calculated using Equation 1 for acute criterion at a hardness of 41 mg/L.

[2] ECA calculated using Equation 4 for acute criterion.

[3] Fully mixed downstream ambient hardness is the mixture of the receiving water and effluent hardness at the applicable effluent fraction.

[4] Fully mixed downstream ambient criteria are the acute criteria calculated using Equation 1 at the mixed hardness.

[5] Fully mixed downstream ambient silver concentration is the mixture of the receiving water and effluent silver concentrations at the applicable effluent fraction.

[6] The effluent fraction ranges from 1% at the high receiving water flow condition, to 100% at the lowest receiving water flow condition (i.e., effluent dominated).

Based on the procedures discussed above, Table F-6 lists all the CTR hardness-dependent metals and the associated ECA used in this Order.

Table F-6. Summary of ECA Evaluations for CTR Hardness-dependent Metals

CTR Metals	ECA (µg/L, total recoverable)	
	acute	chronic
Cadmium	1.6	1.5
Chromium III	1000	120
Copper	7.6	5.3
Lead	1.2	30
Nickel	270	30
Silver	1.3	--
Zinc	69	69

3. Determining the Need for WQBELs

a. No effluent or receiving water quality data exists for this Facility. However, based on available data and information from the Atwater Wastewater Treatment Plant, studies conducted, and information provided by the Discharger for this Facility, the Central Valley Water Board is establishing water quality-based effluent limitations for pollutants that may be present in the discharge.

b. The Central Valley Water Board conducted the RPA in accordance with section 1.3 of the SIP. Although the SIP applies directly to the control of CTR priority pollutants, the State Water Board has held that the Central Valley Water Board may use the SIP as guidance for water quality-based toxics control[12].The SIP states in the introduction, "*The goal of this Policy is to establish a standardized approach for permitting discharges of toxic pollutants to non-ocean surface waters in a manner that promotes statewide consistency*." Therefore, in this Order the RPA procedures from the SIP were used to evaluate reasonable potential for both CTR and non-CTR constituents based on information submitted as part of the application, in studies, and as directed by monitoring and reporting programs.

c. Constituents with No Reasonable Potential. WQBELs are not included in this Order for constituents that do not demonstrate reasonable potential; however, monitoring for those pollutants is established in this Order as required by the SIP. If the results of effluent monitoring demonstrate reasonable potential, this Order may be reopened and modified by adding an appropriate effluent limitation.

[12] See Order WQ 2001-16 (Napa) and Order WQ 2004-0013 (Yuba City).

d. Constituents with Limited Data. Reasonable potential cannot be determined for the following constituents because effluent data are limited or ambient background concentrations are not available. The Discharger is required to continue to monitor for these constituents in the effluent using analytical methods that provide the best feasible detection limits. When additional data become available, further analysis will be conducted to determine whether to add numeric effluent limitations or to continue monitoring.

i. Bis(2-ethylhexyl)phthalate. The CTR includes a criterion of 1.8 µg/L for bis(2-ethylhexyl)phthalate for the protection of human health for waters from which both water and organisms are consumed. Bis(2-ethylhexyl)phthalate was detected in one of three samples in the Atwater Wastewater Treatment Plant effluent at a concentration of 2.6 µg/L. All samples collected in theAtwater Wastewater Treatment Plant's upstream receiving water monitoring location showed bis(2-ethylhexyl)phthalate was not detected. Bis(2-ethylhexyl)phthalate is a common contaminant of sample containers, sampling apparatus, and analytical equipment, and sources of the detected bis(2-ethylhexyl)phthalate may be from plastics used for sampling or analytical equipment. Based on the limited data set and the potential for sample contamination, the Central Valley Water Board is not establishing effluent limitations for bis(2-ethylhexyl)phthalate at this time. This Order requires the Discharger to monitor the effluent for priority pollutants once per year, which includes bis(2-ethylhexyl)phthalate. If monitoring results indicate that the discharge has the reasonable potential to cause or contribute to an exceedance of a water quality objective, this Order may be reopened and modified to include appropriate effluent limitations.

ii. Bromodichloromethane. The CTR includes a criterion of 0.41 µg/L for bromodichloromethane for the protection of human health for waters from which both water and organisms are consumed. The MEC for bromodichloromethane from the Atwater Wastewater Treatment Plant is 15 µg/L and was detected in all 39 samplescollected. All samples collected at the Atwater Wastewater Treatment Plant's upstream receiving water monitoring location showed bromodichloromethane was not detected. Bromodichloromethane is a chlorine disinfection byproduct (DBP). The Discharger will not use chlorine for disinfection at the Facility and instead will useultraviolet light. However, sodium hypochlorite (a chlorine compound) will be used periodically in the wastewater treatment process for operation and maintenance purposes. The chlorine is not expected to survive the high organic-rich primary and secondary treatment processes and it is unknown whether DBPs will form in concentrations that exceed criteria. Because chlorine and DBPs are a concern for receiving water quality, this Order requires the Discharger to conduct a special study to determine if chlorine and DBPs are present in the effluent. Ifthe results of the study indicate that the discharge has the reasonable potential to cause or contribute to an exceedance of a water quality objective, this Order may be reopened and modified to include appropriate effluent limitations.

iii. **Chlorodibromomethane.** The CTR includes a criterion of 0.56 µg/L for chlorodibromomethane for the protection of human health for waters from which both water and organisms are consumed. The MEC for chlorodibromomethane from the Atwater Wastewater Treatment Plant is 8.8 µg/L and was detected in 38 out of 39 samples collected. All samples collected at the Atwater Wastewater Treatment Plant's upstream receiving water monitoring location showed chlorodibromomethane was not detected. Chlorodibromomethane is a DBP. The Discharger will not usechlorine for disinfection at the Facility and instead will useultraviolet light. However, sodium hypochlorite (a chlorine compound) will be used periodically in the wastewater treatment process for operation and maintenance purposes. The chlorine is not expected to survive the high organic-rich primary and secondary treatment processes and it is unknown whether DBPs will form in concentrations that exceed criteria. Because chlorine and DBPs are a concern for receiving water quality, this Order requires the Discharger to conduct a special study to determine if chlorine and DBPs are present in the effluent.Ifthe results of the study indicate that the discharge has the reasonable potential to cause or contribute to an exceedance of a water quality objective, this Order may be reopened and modified to include appropriate effluent limitations.

e. **Constituents with Reasonable Potential.** The Central Valley Water Board finds that the discharge has a reasonable potential to cause or contribute to an in-stream excursion above a water quality standard for acute toxicity, ammonia (as N), BOD_5, TSS, BOD_5 and TSS percent removal,copper, lead, nitrate plus nitrite (as N), pH, total coliform, total residual chlorine, and zinc. WQBELs for these constituents are included in this Order. A summary of the RPA is provided in Attachment G, and a detailed discussion of the RPA for each constituent is provided below.

i. **Ammonia**

(a) **WQO.** The National Ambient Water Quality Criteria (NAWQC) for the protection of freshwater aquatic life for total ammonia, recommend acute (1-hour average; criteria maximum concentration or CMC) standards based on pH, and chronic (30-day average; criteria continuous concentration or CCC) standards based on pH and temperature. USEPA also recommends that no 4-day average concentration should exceed 2.5 times the 30-day CCC. USEPA found that as the pH increased, both the acute and chronic toxicity of ammonia increased. However, while the acute toxicity of ammonia was not influenced by temperature, it was found that invertebrates and young fish experienced increasing chronic toxicity effects with increasing temperature.

Because this is anew facility, no data exists for pH and temperature to determine the applicable criteria. Therefore, this Order establishes water quality criteria for ammonia that are based on effluent and receiving water quality data from the Atwater Wastewater Treatment Plant. This Order

also requires the Discharger to collect the data necessary to re-evaluate the ammonia criteria in the future for Peck/Atwater Drain.

The maximum permitted effluent pH is 8.2. In order to protect against the worst-cased short-term exposure of an organism, a pH value of 8.2 was used to derive the acute criterion. The resulting acute criterion is 5.7 mg/L.

The 30-day average CCC was evaluated for the receiving water based on monitoring data obtained between June 2000 through December 2010 for the Atwater Drain downstream of the Atwater Wastewater Treatment Plant (downstream receiving water monitoring location). Each CCC value was calculated using the rolling 30-day average pH and temperature of the receiving water. From 572 CCC values, the 99.9th percentile of the data set was selected as the most stringent criterion, which is consistent with the 1-in-3 year average frequency for criteria excursions recommended by the USEPA. As a result, the CCC is 2.2 mg/L of ammonia (as N), which was used for development of water quality-based effluent limitations for ammonia (as N).

The 4-day average CCC is derived in accordance with the USEPA criterion as 2.5 times the 30-day CCC. Based on the 30-day CCC of 2.2 mg/L (as N), the 4-day average CCC that should not be exceeded is 5.6 mg/L (as N).

(b) RPA Results. Per Section 1.3, Step 7, of the SIP, the facility type may be used as information to aid in determining if a water quality based effluent limitations is required. The Facility is a POTW that treats domestic wastewater. Untreated domestic wastewater contains ammonia. Nitrification is a biological process that converts ammonia to nitrite and nitrite to nitrate. Denitrification is a process that converts nitrate to nitrite or nitric oxide and then to nitrous oxide or nitrogen gas, which is then released to the atmosphere. The Facility is designed to nitrify to remove ammonia from the waste stream. Inadequate or incomplete nitrification may result in the discharge of ammonia to the receiving stream. Ammonia is known to cause toxicity to aquatic organisms in surface waters and discharges of ammonia would violate the Basin Plan narrative toxicity objective. The conversion of ammonia to nitrites presents a reasonable potential for the discharge to cause or contribute to an in-stream excursion above the NAWQC. The MEC for ammonia from the Atwater Wastewater Treatment Plant was 1.5 mg/L while the maximum observed upstream receiving water concentration was 4.3 mg/L. For these reasons, ammonia in the discharge has a reasonable potential to cause or contribute to an in-stream excursion above the NAWQC.

(c) WQBELs. The Central Valley Water Board calculates WQBELs in accordance with SIP procedures for non-CTR constituents, and ammonia is a non-CTR constituent. The SIP procedure assumes a 4-day averaging

period for calculating the long-term average discharge condition (LTA). However, USEPA recommends modifying the procedure for calculating permit limits for ammonia using a 30-day averaging period for the calculation of the LTA corresponding to the 30-day CCC. Therefore, while the LTAs corresponding to the acute and 4-day chronic criteria were calculated according to SIP procedures, the LTA corresponding to the 30-day CCC was calculated assuming a 30-day averaging period. The lowest LTA representing the acute, 4-day CCC, and 30-day CCC is then selected for deriving the average monthly effluent limitation (AMEL) and the maximum daily effluent limitation (MDEL). The remainder of the WQBEL calculation for ammonia was performed according to the SIP procedures. This Order contains a final AMEL and MDEL for ammonia (as N) of 2.1 mg/L and 5.5 mg/L, respectively, based on the NAWQC.

(d) Plant Performance and Attainability. As this is a new facility, there are no effluent data available to determine if the Discharger is able to comply with the final effluent limitations for ammonia (as N). However, the Facility is designed to fully nitrify ammonia.

ii. Copper

(a) WQO. The CTR includes hardness dependent criteria for the protection of freshwater aquatic life for total recoverable copper. Using the default conversion factors and reasonable worst-case measured hardness, as described in section IV.C.2.e of this Fact Sheet, the applicable acute (1-hour average) criterion is 7.6 µg/L and the applicable chronic (4-day average) criterion is 5.3 µg/L, as total recoverable.

(b) RPA Results. The maximum effluent concentration (MEC) of the Atwater Wastewater Treatment Plant for copper was 4.3 µg/L (as total recoverable) while the maximum observed upstream receiving water concentration of the Atwater Wastewater Treatment Plant's upstream receiving water monitoring location was 17 µg/L (as total recoverable). The calculated upstream receiving water concentration (i.e., upstream of the Facility) for copper in the Hardness Study was 14 µg/L (as total recoverable). Therefore, based on the available data,copper in the discharge has a reasonable potential to cause or contribute to an in-stream excursion above the CTR criterion for the protection of freshwater aquatic life.

(c) WQBELs. No dilution credits are allowed for development of the WQBELs for copper due to possible periods of no flow in the receiving water. This Order contains a final average monthly effluent limitation (AMEL) and maximum daily effluent limitation (MDEL) for copper of 3.8 µg/L and 7.6 µg/L, respectively, based on the CTR criterion for the protection of freshwater aquatic life.

(d) Plant Performance and Attainability. As this is a new facility, there are no effluent data available to determine if the Discharger is able to comply with the final effluent limitations for copper.

iii. Lead

(a) WQO. The CTR includes hardness dependent criteria for the protection of freshwater aquatic life for lead. Using the default conversion factors and reasonable worst-case measured hardness, as described in section IV.C.2.eof this Fact Sheet, the applicable acute (1-hour average) criterion is 30 µg/L and the applicable chronic (4-day average) criterion is 1.2 µg/L, as total recoverable.

(b) RPA Results. The maximum effluent concentration (MEC) of the Atwater Wastewater Treatment Plant for lead was 0.64 µg/L (as total recoverable) while the maximum observed upstream receiving water concentration of the Atwater Wastewater Treatment Plant's upstream receiving water monitoring location was 11 µg/L (as total recoverable). The calculated upstream receiving water concentration (i.e., upstream of the Facility) for lead in the Hardness Study was 3.8 µg/L (as total recoverable). Therefore, based on the available data, lead in the discharge has a reasonable potential to cause or contribute to an in-stream excursion above the CTR criterion for the protection of freshwater aquatic life.

(c) WQBELs. No dilution credits are allowed for development of the WQBELs for lead due to possible periods of no flow in the receiving water. This Order contains a final average monthly effluent limitation (AMEL) and maximum daily effluent limitation (MDEL) for lead of 0.98 µg/L and 2.0 µg/L, respectively, based on the CTR criterion for the protection of freshwater aquatic life.

(d) Plant Performance and Attainability. As this is a new facility, there are no effluent data available to determine if the Discharger is able to comply with the final effluent limitations for lead. However, data from the Atwater Wastewater Treatment Plant show the discharge has not exceeded the final effluent limitations for lead, and the new Facility is expected to provide a higher level of treatment for metals.

iv. Zinc

(a) WQO. The CTR includes hardness dependent criteria for the protection of freshwater aquatic life for zinc. Using the default conversion factors and reasonable worst-case measured hardness, as described in section IV.C.2.eof this Fact Sheet, the applicable acute (1-hour average) criterion is 69 µg/L and the applicable chronic (4-day average) criterion is 69 µg/L, as total recoverable.

(b) RPA Results. The maximum effluent concentration (MEC) of the Atwater Wastewater Treatment Plant for zinc was 66 µg/L (as total recoverable) while the maximum observed upstream receiving water concentration of the Atwater Wastewater Treatment Plant's upstream receiving water monitoring location was 77 µg/L (as total recoverable). The calculated upstream receiving water concentration (i.e., upstream of the Facility) for zinc in the Hardness Study was 39 µg/L (as total recoverable). Therefore, based on the available data, zinc in the discharge has a reasonable potential to cause or contribute to an in-stream excursion above the CTR criterion for the protection of freshwater aquatic life.

(c) WQBELs. No dilution credits are allowed for development of the WQBELs for zinc due to possible periods of no flow in the receiving water. This Order contains a final average monthly effluent limitation (AMEL) and maximum daily effluent limitation (MDEL) for zinc of 34 µg/L and 69 µg/L, respectively, based on the CTR criterion for the protection of freshwater aquatic life.

(d) Plant Performance and Attainability. As this is a new facility, there are no effluent data available to determine if the Discharger is able to comply with the final effluent limitations for zinc.

v. Chlorine Residual

(a) WQO. USEPA developed NAWQC for protection of freshwater aquatic life for chlorine residual. The recommended 4-day average (chronic) and 1-hour average (acute) criteria for chlorine residual are 0.011 mg/L and 0.019 mg/L, respectively. These criteria are protective of the Basin Plan's narrative toxicity objective.

(b) RPA Results. Effluent disinfection will be accomplished with an ultraviolet light disinfection system. However, the Discharger proposes to use chlorine for operation and maintenance purposes, such as in the oxidation ditch to control foaming. The threat of a chlorine release under these circumstances is low. Nevertheless, because chlorine is highly toxic to aquatic life, the discharge has a reasonable potential to cause or contribute to an in-stream excursion above the NAWQC.

(c) WQBELs. The USEPA *Technical Support Document for Water Quality-Based Toxics Control* [EPA 505/2-90-001] contains statistical methods for converting chronic (4-day) and acute (1-hour) aquatic life criteria to average monthly and maximum daily effluent limitations based on the variability of the existing data and the expected frequency of monitoring. However, because chlorine is an acutely toxic constituent, an average 1-hour limitation is considered more appropriate than an average daily limitation. This Order contains a 4-day average effluent limitation and 1-hour average effluent limitation for chlorine residual of 0.011 mg/L and

0.019 mg/L, respectively, based on USEPA's NAWQC, which implements the Basin Plan's narrative toxicity objective for protection of aquatic life.

(d) Plant Performance and Attainability. As this is a new facility, there are no effluent data available to determine if the Discharger is able to comply with the final effluent limitations for total residual chlorine.

vi. Nitrate and Nitrite

(a) WQO. DPH has adopted Primary MCLs for the protection of human health for nitrite (as N) and nitrate plus nitrite (sum as N) that are equal to 1 mg/L and 10 mg/L, respectively.

(b) RPA Results. Untreated domestic wastewater contains ammonia. Nitrification is a biological process that converts ammonia to nitrite and nitrite to nitrate. Denitrification is a process that converts nitrate to nitrite or nitric oxide and then to nitrous oxide or nitrogen gas, which is then released to the atmosphere. Nitrate and nitrite are known to cause adverse health effects in humans. Inadequate or incomplete denitrification may result in the discharge of nitrate and/or nitrite to the receiving stream. The conversion of ammonia to nitrites and the conversion of nitrites to nitrates present a reasonable potential for the discharge to cause or contribute to an in-stream excursion above the Primary MCL for nitrate plus nitrite (as N).

(c) WQBELs. This Order contains a final average monthly effluent limitation (AMEL) for nitrate plus nitrite (as N) of 10 mg/L, based on the protection of the Basin Plan's narrative chemical constituents objective and to assure the treatment process adequately nitrifies and denitrifies the waste stream. In addition, this Order contains effluent monitoring for nitrite (as N).

(d) Plant Performance and Attainability. As this is a new facility, there are no effluent data available to determine if the Discharger is able to comply with the final effluent limitation for nitrate plus nitrite (as N). However, the Facility is designed to denitrify.

vii. Pathogens

(a) WQO. DPH has developed reclamation criteria atTitle 22, CCR, Division 4, Chapter 3 (Title 22), for the reuse of wastewater. Title 22 requires that for spray irrigation of food crops, parks, playgrounds, schoolyards, and other areas of similar public access, wastewater be adequately disinfected, oxidized, coagulated, clarified, and filtered, and that the effluent total coliform levels not exceed 2.2 MPN/100 mL as a 7-day median. As coliform organisms are living and mobile, it is impracticable to quantify an exact number of coliform organisms and to establish weekly average limitations. Instead, coliform organisms are measured as a most

probable number and regulated based on a 7-day median effluent limitation.

Title 22 also requires that recycled water used as a source of water supply for non-restricted recreational impoundments be disinfected tertiary recycled water that has been subjected to conventional treatment. A non-restricted recreational impoundment is defined as "…*an impoundment of recycled water, in which no limitations are imposed on body-contact water recreational activities.*" Title 22 is not directly applicable to surface waters; however, the Central Valley Water Board finds that it is appropriate to apply an equivalent level of treatment to that required by the DPH's reclamation criteria because the receiving water is used for irrigation of agricultural land and for contact recreation purposes. The stringent disinfection criteria of Title 22 are appropriate since the undiluted effluent may be used for the irrigation of food crops and/or for body-contact water recreation. Coliform organisms are intended as an indicator of the effectiveness of the entire treatment train and the effectiveness of removing other pathogens.

(b) RPA Results. The beneficial uses of Peck/Atwater Drain include municipal and domestic supply, water contact recreation, and agricultural irrigation supply, and there is, at times, less than 20:1 dilution. To protect these beneficial uses, the Central Valley Water Board finds that the wastewater must be disinfected and adequately treated to prevent disease. The method of treatment is not prescribed by this Order; however, wastewater must be treated to a level equivalent to that recommended by DPH.

(c) WQBELs. In accordance with the requirements of Title 22, this Order includes effluent limitations for total coliform of 2.2 MPN/100 mL as a 7-day median; 23 MPN/100 mL, not to be exceeded more than once in a 30-day period; and 240 MPN/100 mL as an instantaneous maximum.

In addition to coliform limitations, turbidity operational specifications have been included as a second indicator of the effectiveness of the treatment process, and to assure compliance with the required level of treatment. The tertiary treatment process, or equivalent, is capable of reliably meeting a turbidity of 2 nephelometric turbidity units (NTU). Failure of the filtration system such that virus removal is impaired would normally result in increased particles in the effluent, which results in higher effluent turbidity. Turbidity has a major advantage for monitoring filter performance, allowing immediate detection of filter failure and rapid corrective action. Coliform testing, by comparison, is not conducted continuously and requires several hours, to days, to identify high coliform concentrations. Therefore, to ensure compliance with DPH recommended Title 22 disinfection criteria, weekly average specifications are impracticable for turbidity. This Order includes operational specifications

for turbidity that vary depending on whether the Discharger is using coagulation.

This Order contains effluent limitations for BOD_5, total coliform, TSS, and BOD_5 and TSS percent removal, and requires a tertiary level of treatment, or equivalent necessary to protect the beneficial uses of the receiving water. The Central Valley Water Board has previously considered the factors in CWC section 13241 in establishing these requirements (see Order R5-2007-0063).

(d) Plant Performance and Attainability. As this is a new facility, there are no effluent data available to determine if the Discharger is able to comply with the final effluent limitations for BOD_5, TSS, BOD_5 and TSS percent removal, and total coliform. However, the Facility is designed to comply with these final effluent limitations.

viii. pH

(a) WQO. The Basin Plan includes a water quality objective for surface waters (except for Goose Lake) that the "*…pH shall not be depressed below 6.5 nor raised above 8.5.*"The Discharger requested a more stringent instantaneous maximum effluent pH limitation of 8.2 to allow less stringent ammonia effluent limitations, which are calculated based on pH and temperature.

(b) RPA Results. The discharge of municipal treated wastewater has a reasonable potential to cause or contribute to an excursion above the Basin Plan's numeric objectives for pH.

(c) WQBELs. Effluent limitations for pH of 6.5 as an instantaneous minimum and 8.2 as an instantaneous maximum are included in this Order based on protection of the Basin Plan objectives for pH.

(d) Plant Performance and Attainability. As this is a new facility, there are no effluent data available to determine if the Discharger is able to comply with the final effluent limitations for pH. The Discharger, however, stated that based on available pH effluent data from the Atwater Wastewater Treatment Plant, it expects the effluent pH of the Facility to be below 8.2.

4. WQBEL Calculations

a. This Order includes WQBELs for acute toxicity, ammonia (as N), copper, lead, zinc, total residual chlorine, nitrate plus nitrite (as N), total coliform, BOD_5, TSS, BOD_5 and TSS percent removal, and pH. The general methodology for calculating WQBELs based on the different criteria/objectives is described in subsections IV.C.4.b through e, below. See Attachment H for the WQBELs calculations for ammonia (as N), copper, lead, and zinc.

b. Effluent Concentration Allowance. For each water quality criterion/objective, the ECA is calculated using the following steady-state mass balance equation from Section 1.4 of the SIP:

$$ECA = C + D(C - B) \quad \text{where } C>B, \text{ and}$$
$$ECA = C \quad \text{where } C \leq B$$

where:

ECA = effluent concentration allowance
D = dilution credit
C = the priority pollutant criterion/objective
B = the ambient background concentration

According to the SIP, the ambient background concentration (B) in the equation above shall be the observed maximum with the exception that an ECA calculated from a priority pollutant criterion/objective that is intended to protect human health from carcinogenic effects shall use the arithmetic mean concentration of the ambient background samples. For ECAs based on MCLs, which implement the Basin Plan's chemical constituents objective and are applied as annual averages (except for nitrate plus nitrite (as N) and nitrite (as N)), an arithmetic mean is also used for B due to the long-term basis of the criteria.

c. Basin Plan Objectives and MCLs. For WQBELs based on site-specific numeric Basin Plan objectives or MCLs, the effluent limitations are applied directly as the ECA as either an MDEL, AMEL, or average annual effluent limitations, depending on the averaging period of the objective.

d. Aquatic Toxicity Criteria. WQBELs based on acute and chronic aquatic toxicity criteria are calculated in accordance with Section 1.4 of the SIP. The ECAs are converted to equivalent long-term averages (i.e., LTA_{acute} and $LTA_{chronic}$) using statistical multipliers and the lowest LTA is used to calculate the AMEL and MDEL using additional statistical multipliers.

e. Human Health Criteria. WQBELs based on human health criteria, are also calculated in accordance with Section 1.4 of the SIP. The ECAs are set equal to the AMEL and a statistical multiplier is used to calculate the MDEL.

$$AMEL = mult_{AMEL}\left[\min\left(\overbrace{M_A ECA_{acute}}^{LTA_{acute}}, M_C ECA_{chronic}\right)\right]$$

$$MDEL = mult_{MDEL}\left[\min\left(M_A ECA_{acute}, \underbrace{M_C ECA_{chronic}}_{LTA_{chronic}}\right)\right]$$

$$MDEL_{HH} = \left(\frac{mult_{MDEL}}{mult_{AMEL}}\right) AMEL_{HH}$$

where:

$mult_{AMEL}$ = statistical multiplier converting minimum LTA to AMEL
$mult_{MDEL}$ = statistical multiplier converting minimum LTA to MDEL
M_A = statistical multiplier converting acute ECA to LTA_{acute}
M_C = statistical multiplier converting chronic ECA to $LTA_{chronic}$

Summary of Applicable Water Quality-Based Effluent Limitations
Discharge Point 001

Table F-7. Summary of Applicable Water Quality-Based Effluent Limitations

Parameter	Units	Effluent Limitations				
		Average Monthly	Average Weekly	Maximum Daily	Instantaneous Minimum	Instantaneous Maximum
Biochemical Oxygen Demand 5-day @ 20°C	mg/L	10	15	20	--	--
	lbs/day	500[1]	750[1]	1000	--	--
Total Suspended Solids	mg/L	10	15	20	--	--
	lbs/day	500[1]	750[1]	1000[1]	--	--
pH	standard units	--	--	--	6.5	8.2
Copper, Total Recoverable	µg/L	3.8	--	7.6	--	--
Lead, Total Recoverable	µg/L	0.98	--	2.0	--	--
Zinc, Total Recoverable	µg/L	34	--	69	--	--
Ammonia Nitrogen, Total (as N)	mg/L	2.1	--	5.5	--	--
Nitrate plus Nitrite (as N)	mg/L	10.0	--	--	--	--

[1] Based upon a design flow of 6.0 mgd.

a. **Percent Removal.** The average monthly percent removal of 5-day biochemical oxygen demand (BOD_5) and total suspended solids (TSS) shall not be less than 90 percent.

b. **Total Residual Chlorine.** Effluent total residual chlorine shall not exceed:

   i. 0.011 mg/L, as a 4-day average; nor
   ii. 0.019 mg/L as a 1-hour average.

c. **Total Coliform.** Effluent total coliform shall not exceed:

   i. 2.2 most probable number (MPN) per 100 mL, as a 7-day median;
   ii. 23 MPN/100 mL, more than once in any 30-day period; nor
   iii. 240 MPN/100 mL, instantaneous maximum.

d. **Acute Whole Effluent Toxicity.** Survival of aquatic organisms in 96-hour bioassays of undiluted waste shall be no less than:

   i. Minimum for any one bioassay ---------- 70%
   ii. Median for any three consecutive bioassays ---------- 90%

5. Whole Effluent Toxicity (WET)

For compliance with the Basin Plan's narrative toxicity objective, this Order requires the Discharger to conduct whole effluent toxicity testing for acute and chronic toxicity, as specified in the Monitoring and Reporting Program (Attachment E, section V.). This Order also contains effluent limitations for acute toxicity and requires the Discharger to implement best management practices to investigate the causes of, and identify corrective actions to reduce or eliminate effluent toxicity.

a. Acute Aquatic Toxicity. The Basin Plan contains a narrative toxicity objective that states, "*All waters shall be maintained free of toxic substances in concentrations that produce detrimental physiological responses in human, plant, animal, or aquatic life.*" (Basin Plan at page III-8.01) The Basin Plan also states that, "*…effluent limits based upon acute biotoxicity tests of effluents will be prescribed where appropriate…*" (Basin Plan at page III-9.00). USEPA Region 9 provided guidance for the development of acute toxicity effluent limitations in the absence of numeric water quality objectives for toxicity in its document titled "Guidance for NPDES Permit Issuance", dated February 1994. In section B.2. "Toxicity Requirements" (pgs. 14-15) it states that, "*In the absence of specific numeric water quality objectives for acute and chronic toxicity, the narrative criterion 'no toxics in toxic amounts' applies. Achievement of the narrative criterion, as applied herein, means that ambient waters shall not demonstrate for acute toxicity: 1) less than 90% survival, 50% of the time, based on the monthly median, or 2) less than 70% survival, 10% of the time, based on any monthly median. For chronic toxicity, ambient waters shall not demonstrate a test result of greater than 1 TUc.*" Accordingly, effluent limitations for acute toxicity have been included in this Order as follows:

> **Acute Toxicity.**Survival of aquatic organisms in 96-hour bioassays of undiluted waste shall be no less than:
>
> Minimum for any one bioassay---------- 70%
> Median for any three consecutive bioassays---------- 90%

b. Chronic Aquatic Toxicity. The Basin Plan contains a narrative toxicity objective that states, "*All waters shall be maintained free of toxic substances in concentrations that produce detrimental physiological responses in human, plant, animal, or aquatic life*," (Basin Plan at page III-8.01). As this is a new facility, adequate chronic WET data is not available to determine if the discharge has reasonable potential to cause or contribute to an in-stream excursion above the Basin Plan's narrative toxicity objective.

The Monitoring and Reporting Program of this Order requires quarterly chronic WET monitoring for demonstration of compliance with the narrative toxicity objective. In addition to WET monitoring, the Special Provision in section VI.C.2.a. of the Order requires the Discharger to submit to the Central Valley Water Board an Initial Investigative Toxicity Reduction Evaluation (TRE) Work Plan for approval by the Executive Officer, to ensure the Discharger has a plan to

immediately move forward with the initial tiers of a TRE, in the event effluent toxicity is encountered in the future. The provision also includes a numeric toxicity monitoring trigger, requirements for accelerated monitoring, and requirements for TRE initiation if effluent toxicity is demonstrated.

Numeric chronic WET effluent limitations have not been included in this Order. The SIP contains implementation gaps regarding the appropriate form and implementation of chronic toxicity limits. This has resulted in the petitioning of a NPDES permit in the Los Angeles Region[13] that contained numeric chronic toxicity effluent limitations. To address the petition, the State Water Board adopted WQO 2003-0012 directing its staff to revise the toxicity control provisions in the SIP. The State Water Board states the following in WQO 2003-0012, "*In reviewing this petition and receiving comments from numerous interested persons on the propriety of including numeric effluent limitations for chronic toxicity in NPDES permits for publicly-owned treatment works that discharge to inland waters, we have determined that this issue should be considered in a regulatory setting, in order to allow for full public discussion and deliberation. We intend to modify the SIP to specifically address the issue. We anticipate that review will occur within the next year. We therefore decline to make a determination here regarding the propriety of the final numeric effluent limitations for chronic toxicity contained in these permits.*" The process to revise the SIP is currently underway. Proposed changes include clarifying the appropriate form of effluent toxicity limits in NPDES permits and general expansion and standardization of toxicity control implementation related to the NPDES permitting process. Since the toxicity control provisions in the SIP are under revision it is infeasible to develop numeric effluent limitations for chronic toxicity. Therefore, this Order requires that the Discharger meet best management practices for compliance with the Basin Plan's narrative toxicity objective, as allowed under 40 CFR 122.44(k).

To ensure compliance with the Basin Plan's narrative toxicity objective, the Discharger is required to conduct chronic WET testing, as specified in the Monitoring and Reporting Program (Attachment E, section V.). Furthermore, the Special Provision contained at VI.C.2.a. of this Order requires the Discharger to investigate the causes of, and identify and implement corrective actions to reduce or eliminate effluent toxicity. If the discharge demonstrates toxicity exceeding the numeric toxicity monitoring trigger, the Discharger is required to initiate a TRE in accordance with an approved TRE workplan. The numeric toxicity monitoring trigger is not an effluent limitation; it is the toxicity threshold at which the Discharger is required to perform accelerated chronic toxicity

[13] In the Matter of the Review of Own Motion of Waste Discharge Requirements Order Nos. R4-2002-0121 [NPDES No. CA0054011] and R4-2002-0123 [NPDES NO. CA0055119] and Time Schedule Order Nos. R4-2002-0122 and R4-2002-0124 for Los Coyotes and Long Beach Wastewater Reclamation Plants Issued by the California Regional Water Quality Control Board, Los Angeles Region SWRCB/OCC FILES A-1496 and 1496(a).

monitoring, as well as, the threshold to initiate a TRE if effluent toxicity has been demonstrated.

D. Performance-based Effluent Limitations

1. Applicable Performance-based Effluent Limitation

a. Electrical Conductivity (EC). The NPDES permit for the Atwater Wastewater Treatment Plant contained a final effluent limitation for EC of 700 µmhos/cm as a monthly average. The permit included justification that the 700 µmhos/cm is protective of the beneficial use for agricultural water supply and applies the Basin Plan's narrative chemical constituents objective. The effluent limitation was based on not restricting the use of the treated wastewater for irrigation of salt-sensitive crops. The Discharger has not conducted a site-specific salinity investigation to evaluate whether a revised EC value represents best efforts and will reasonably protect the agricultural supply beneficial use.

The Central Valley Water Board, in cooperation with the State Water Board, has begun the process to develop a new policy for the regulation of salinity in the Central Valley. The effort includes adoption of long-term solutions that will lead to enhanced water quality and economic sustainability. Central Valley Salinity Alternatives for Long-Term Sustainability (CV-SALTS) is a collaborative basin planning effort aimed at developing and implementing a comprehensive salinity management program.

EC data from January 2000 through December 2010 show that the effluent from the Atwater Wastewater Treatment Plant did not exceed 700 µmhos/cm as a monthly average and, thus, the discharge does not have reasonable potential to cause or contribute to an in-stream excursion of water quality objectives for salinity. However, since there is a salt TMDL for the lower San Joaquin River, to which Peck/Atwater Drain is hydraulically connected, and allowing the Discharger to increase its current salt loading may be contrary to the Region-wide effort to address salinity in the Central Valley, this Order includes a performance-based effluent limitation of 700 µmhos/cm as a monthly average.This Order also requires the Discharger to prepare and implement a salinity evaluation and minimization plan to determine ways to reduce the salinity of its discharge.

For salinity, the Central Valley Water Board is considering limiting effluent salinity of municipal wastewater treatment facilities to an increment of 500 µmhos/cm over the salinity of the municipal water supply as representing best practicable treatment or control. This Order requires the Discharger to monitor its municipal water supply for EC and total dissolved solids.

Summary of Performance-based Effluent Limitation
Discharge Point 001

Table F-8. Summary of Performance-based Effluent Limitation

Parameter	Units	Effluent Limitations				
		Average Monthly	Average Weekly	Maximum Daily	Instantaneous Minimum	Instantaneous Maximum
Electrical Conductivity @ 25°C	µmhos/cm	700	--	--	--	--

E. Final Effluent Limitations

1. Mass-based Effluent Limitations

Federal regulation, 40 CFR 122.45(f)(1), requires effluent limitations be expressed in terms of mass, with some exceptions, and 40 CFR 122.45(f)(2) allows pollutants that are limited in terms of mass to additionally be limited in terms of other units of measurement. This Order includes effluent limitations expressed in terms of mass and concentration. In addition, pursuant to the exceptions to mass limitations provided in 40 CFR 122.45(f)(1), some effluent limitations are not expressed in terms of mass, such as pH and settleable solids, and when the applicable standards are expressed in terms of concentration (e.g., CTR criteria and MCLs) and mass limitations are not necessary to protect the beneficial uses of the receiving water.

Mass-based effluent limitations were calculated based upon the design flow (Average Dry Weather Flow)permitted in section IV.A.1.b. of this Order.

2. Averaging Periods for Effluent Limitations

Federal regulation, 40 CFR 122.45(d), requires average weekly and average monthly discharge limitations for publicly owned treatment works (POTWs) unless impracticable. However, for toxic pollutants and pollutant parameters in water quality permitting, USEPA recommends the use of a maximum daily effluent limitation in lieu of average weekly effluent limitations for two reasons. "*First, the basis for the 7-day average for POTWs derives from the secondary treatment requirements. This basis is not related to the need for assuring achievement of water quality standards. Second, a 7-day average, which could comprise up to seven or more daily samples, could average out peak toxic concentrations and therefore the discharge's potential for causing acute toxic effects would be missed,*" (TSD, pg. 96). This Order uses maximum daily effluent limitations in lieu of average weekly effluent limitations for ammonia (as N), copper, lead, and zinc as recommended by the TSD for the achievement of water quality standards and for the protection of the beneficial uses of the receiving stream. Furthermore, for pH, total residual chlorine, and total coliform, weekly average effluent limitations have been replaced or supplemented with effluent limitations utilizing shorter averaging periods. The rationale for using shorter averaging periods for these constituents is discussed in section IV.C.3. of this Fact Sheet.

3. Satisfaction of Anti-Backsliding Requirements

The Clean Water Act specifies that a revised permit may not include effluent limitations that are less stringent than the previous permit unless a less stringent limitation is justified based on exceptions to the anti-backsliding provisions contained in Clean Water Act sections 402(o) or 303(d)(4), or, where applicable, 40 CFR 122.44(l).As this is a new discharge, the anti-backsliding requirements do not apply.

4. Satisfaction of Antidegradation Policy

This Order does not allow for an increase in flow or mass of pollutants to Peck/Atwater Drainfrom than allowed for the Atwater Wastewater Treatment Plant, which is regulated under Waste Discharge Requirements Order No. R5-2007-0063 (NPDES Permit No. CA0079197). As the discharge from the Atwater Wastewater Treatment Plant will cease upon commencement of discharge from the new Facility and the discharge is to the same water body, there is no reason to believe the discharge in compliance with this Order will result in a reduction of water quality greater than what was previously authorized. The existing beneficial uses of Peck/Atwater Drain were largely established under the discharge conditions created by the existing discharge, and most of the time, the beneficial uses applicable to Peck/Atwater Drain exist because of the discharge from the Atwater Wastewater Treatment Plant. The Facility is being designed to provide a higher level of treatment compared to the Atwater Wastewater Treatment Plant, which will only improve the existing conditions. For these reasons, a complete antidegradation analysis is not necessary. The Order requires compliance with applicable federal technology-based standards and with WQBELs where the discharge could have the reasonable potential to cause or contribute to an exceedance of water quality standards. The permitted discharge is consistent with the antidegradation provisions of 40 CFR 131.12 and State Water Board Resolution No. 68-16. Compliance with these requirements will result in the use of best practicable treatment or control of the discharge.

5. Stringency of Requirements for Individual Pollutants

This Order contains both technology-based effluent limitations and WQBELs for individual pollutants. The technology-based effluent limitations consist of restrictions on flow. The WQBELs consist of restrictions on BOD_5, TSS, BOD_5 and TSS percent removal, pH, copper, lead, zinc, ammonia (as N), nitrite plus nitrate (as N), total residual chlorine, total coliform, and acute toxicity. This Order includes a performance-based effluent limitation for EC. This Order's technology-based pollutant restrictions implement the minimum, applicable federal technology-based requirements.

This Order contains pollutant restrictions that are more stringent than applicable federal requirements and standards. Specifically, this Order includes effluent limitations for BOD_5, TSS, BOD_5 and TSS percent removal, and pH that are more stringent than applicable federal standards, but that are nonetheless necessary to

meet numeric objectives or protect beneficial uses. The rationale for including these limitations is explained in section IV.C.3. of this Fact Sheet. In addition, the Central Valley Water Board has previously considered the factors in CWC section 13241 (see Order R5-2007-0063).

Summary of Final Effluent Limitations
Discharge Point 001

Table F-9. Summary of Final Effluent Limitations

Parameter	Units	Effluent Limitations					Basis[1]
		Average Monthly	Average Weekly	Maximum Daily	Instantaneous Minimum	Instantaneous Maximum	
Biochemical Oxygen Demand 5-day @ 20°C	mg/L	10	15	20	--	--	TTC
	lbs/day	500[2]	750[2]	1000[2]	--	--	DC, TTC
Total Suspended Solids	mg/L	10	15	20	--	--	TTC
	lbs/day	500[2]	750	1000[2]	--	--	DC, TTC
pH	standard units	--	--	--	6.5	8.2	BP
Copper, Total Recoverable	µg/L	3.8	--	7.6	--	--	CTR
Lead, Total Recoverable	µg/L	0.98	--	2.0	--	--	CTR
Zinc, Total Recoverable	µg/L	34	--	69	--	--	CTR
Ammonia (as N), Total	mg/L	2.1	--	5.5	--	--	NAWQC
Electrical Conductivity @ 25°C	µmhos/cm	700	--	--	--	--	PB
Nitrate plus Nitrite (as N)	mg/L	10.0	--	--	--	--	MCL
Flow	mgd	--	--	see below	--	--	DC
BOD_5 and TSS percent removal	%	90	--	--	--	--	TTC
Chlorine, Total Residual	mg/L	-- (see below)	--	--	--	--	NAWQC
Total Coliform	MPN/100 mL	-- (see below)	--	--	--	--	Title 22
Acute Toxicity	% survival	-- (see below)	--	--	--	--	--

Parameter	Units	Effluent Limitations					Basis[1]
		Average Monthly	Average Weekly	Maximum Daily	Instantaneous Minimum	Instantaneous Maximum	

[1] DC – Based on the design capacity of the Facility.
TTC – Based on tertiary treatment capability. These effluent limitations reflect the capability of a properly operated tertiary treatment plant.
BP – Based on water quality objectives contained in the Basin Plan.
CTR – Based on water quality criteria contained in the California Toxics Rule and applied as specified in the SIP.
NAWQC – Based on USEPA's National Ambient Water Quality Criteria for the protection of freshwater aquatic life.
MCL – Based on the Primary Maximum Contaminant Level.
Title 22 – Based on CA Department of Public Health Reclamation Criteria, CCR, Division 4, Chapter 3
BPJ – Best Professional Judgment
BPTC – Best Practicable Treatment or Control
PB – Performance-based

[2] Based upon a design flow of 6.0 mgd.

a. **Average Dry Weather Flow.** The average dry weather daily discharge flow shall not exceed 6.0 mgd.

b. **Percent Removal.** The average monthly percent removal of 5-day biochemical oxygen demand (BOD_5) and total suspended solids (TSS) shall not be less than 90 percent.

c. **Total Residual Chlorine.** Effluent total residual chlorine shall not exceed:

   i. 0.011 mg/L, as a 4-day average; nor
   ii. 0.019 mg/L, as a 1-hour average.

d. **Total Coliform.** Effluent total coliform shall not exceed:

   i. 2.2 most probable number (MPN) per 100 mL, as a 7-day median;
   ii. 23 MPN/100 mL, more than once in any 30-day period; nor
   iii. 240 MPN/100 mL, instantaneous maximum.

e. **Acute Whole Effluent Toxicity.** Survival of aquatic organisms in 96-hour bioassays of undiluted waste shall be no less than:

   i. Minimum for any one bioassay ---------- 70%
   ii. Median for any three consecutive bioassays ---------- 90%

F. Interim Effluent Limitations – Not Applicable

G. Land Discharge Specifications – Not Applicable

H. Reclamation Specifications – Not Applicable

V. RATIONALE FOR RECEIVING WATER LIMITATIONS

Basin Plan water quality objectives to protect the beneficial uses of surface water and groundwater include numeric objectives and narrative objectives, including objectives for chemical constituents, toxicity, and tastes and odors. The toxicity objective requires that surface water and groundwater be maintained free of toxic substances in concentrations that produce detrimental physiological responses in humans, plants, animals, or aquatic life. The chemical constituent objective requires that surface water and groundwater shall not contain chemical constituents in concentrations that adversely affect any beneficial use or that exceed the maximum contaminant levels (MCLs) in Title 22, CCR. The tastes and odors objective states that surface water and groundwater shall not contain taste- or odor-producing substances in concentrations that cause nuisance or adversely affect beneficial uses. The Basin Plan requires the application of the most stringent objective necessary to ensure that surface water and groundwater do not contain chemical constituents, toxic substances, radionuclides, or taste and odor producing substances in concentrations that adversely affect domestic drinking water supply, agricultural supply, or any other beneficial use.

A. Surface Water

1. CWA section 303(a-c), requires states to adopt water quality standards, including criteria where they are necessary to protect beneficial uses. The Central Valley Water Board adopted water quality criteria as water quality objectives in the Basin Plan. The Basin Plan states that "*[t]he numerical and narrative water quality objectives define the least stringent standards that the Regional Water board will apply to regional waters in order to protect beneficial uses.*" The Basin Plan includes numeric and narrative water quality objectives for various beneficial uses and water bodies. This Order contains receiving surface water limitations based on the Basin Plan numerical and narrative water quality objectives for bacteria, biostimulatory substances, chemical constituents, color, dissolved oxygen, floating material, oil and grease, pH, pesticides, radioactivity, settleable material, suspended material, suspended sediments, taste and odors, toxicity, and turbidity.

2. Given the situation of the receiving water (see Section II.B. of this Fact Sheet), there is no natural background water in Peck/Atwater Drain. Any flow upstream of the discharge point is unnatural, artificial background water that does not have a natural temperature. Therefore, this Order contains receiving surface water limitations for temperature based on the Discharger's report entitled *Assessment of Water Temperatures and Characterization of Aquatic Biological Resources in the Atwater Drain and Peck Drain to Determine Temperature Controls for the Atwater Wastewater Treatment Facility*, June 2009.

B. Groundwater

1. The beneficial uses of the underlying ground water are municipal and domestic supply, industrial service supply, industrial process supply, and agricultural supply.

2. Basin Plan water quality objectives include narrative objectives for chemical constituents, tastes and odors, and toxicity of groundwater. The toxicity objective requires that groundwater be maintained free of toxic substances in concentrations that produce detrimental physiological responses in humans, plants, animals, or aquatic life. The chemical constituent objective states groundwater shall not contain chemical constituents in concentrations that adversely affect any beneficial use. The tastes and odors objective prohibits taste- or odor-producing substances in concentrations that cause nuisance or adversely affect beneficial uses. The Basin Plan also establishes numerical water quality objectives for chemical constituents and radioactivity in groundwaters designated as municipal supply. These include, at a minimum, compliance with MCLs in Title 22 of the CCR. The bacteria objective prohibits coliform organisms at or above 2.2 MPN/100 mL. The Basin Plan requires the application of the most stringent objective necessary to ensure that waters do not contain chemical constituents, toxic substances, radionuclides, taste- or odor-producing substances, or bacteria in concentrations that adversely affect municipal or domestic supply, agricultural supply, industrial supply or some other beneficial use.

3. Groundwater limitations are required to protect the beneficial uses of the underlying groundwater.

VI. RATIONALE FOR MONITORING AND REPORTING REQUIREMENTS

Federal regulations, 40 CFR 122.48, require that all NPDES permits specify requirements for recording and reporting monitoring results. CWC sections 13267 and 13383 authorize the Central Valley Water Board to require technical and monitoring reports. The Monitoring and Reporting Program (Attachment E) of this Order establishes monitoring and reporting requirements to implement federal and state requirements. The following provides the rationale for the monitoring and reporting requirements contained in the Monitoring and Reporting Program for the Facility.

A. Influent Monitoring

1. Influent monitoring is required to collect data on the characteristics of the wastewater and to assess compliance with effluent limitations (e.g., BOD_5 and TSS reduction requirements).

B. Effluent Monitoring

1. Pursuant to the requirements of 40 CFR 122.44(i)(2) effluent monitoring is required for all constituents with effluent limitations. Effluent monitoring is necessary to assess compliance with effluent limitations, assess the effectiveness of the treatment process, and to assess the impacts of the discharge on the receiving stream and groundwater.

2. Monitoring for chlorpyrifos and diazinon (1/quarter) has been included in this Order to determine compliance with the Basin Plan waste load allocations.

3. Monitoring for dichlorobromomethane,chlorodibromomethane, and total residual chlorine is required only during chlorine use to determine the effects, if any, that chlorine use will have on the effluent. The Discharger is also required to report its chlorine use.

4. Monitoring for dioxin congeners is required at once per permit cycle, during the third year of the permit. The NPDES permit for the Atwater Wastewater Treatment Plant contained effluent limitations for dioxin. The Discharger determined that Castle Aviation and Development Center (old Castle Air Force Base) was the source of the dioxin. Between 2005 and 2008, Castle flushed and capped drainage lines that contributed flow to the Atwater Wastewater Treatment Plant. Since those measures were implemented, the TCDD equivalent in the Atwater Wastewater Treatment Plant effluent has been less than the dioxin objective. However, given the history this Order requires the Discharger to monitor for dioxin congeners. If the monitoring shows the TCDD equivalent is above the dioxin objective, the Discharger is required to conduct additional monitoring.

C. Whole Effluent Toxicity Testing Requirements

1. **Acute Toxicity.**Quarterly 96-hour bioassay testing is required to demonstrate compliance with the effluent limitations for acute toxicity.

2. **Chronic Toxicity.**Quarterly chronic whole effluent toxicity testing is required in order to demonstrate compliance with the Basin Plan's narrative toxicity objective.

D. Receiving Water Monitoring

1. Surface Water

a. Receiving water monitoring is necessary to assess compliance with receiving water limitations and to assess the impacts of the discharge on the receiving stream.

2. Groundwater

a. This Order does not include groundwater monitoring because most of the Facility's treatment components (i.e., oxidation ditches, secondary clarifiers) will be concrete lined. However, the City of Atwater maintains and samples groundwater monitoring wells surrounding the Facility pursuant to Order No. R5-2001-0096 for an adjacent closed landfill.

E. Other Monitoring Requirements

1. **Biosolids Monitoring.** Biosolids monitoring is required to ensure compliance with the biosolids disposal requirements contained in the Special Provision,Sections VI.C.5.b and c of this Order. Biosolids disposal requirements are imposed pursuant to 40 CFR Part 503 to protect public health and prevent groundwater degradation.

2. **Municipal Water Supply Monitoring.** Water supply monitoring is required to evaluate the source of constituents in the wastewater and to track the Discharger's efforts to minimize salinity increases through use of the municipal water supply.

3. **Ultraviolet Light (UV) Disinfection System Monitoring.** UV system specifications and monitoring and reporting is required to ensure that adequate UV dosage is applied to the wastewater to inactivate pathogens in the wastewater. UV disinfection system monitoring is imposed pursuant to recommendations by the California Department of Public Health (DPH), and the National Water Research Institute (NWRI) and American Water Works Association Research Foundation NWRI/AWWARF's "*Ultraviolet Disinfection Guidelines for Drinking Water and Water Reuse*" to ensure sufficient disinfection for the protection of public health.

4. **Tertiary Treatment Filters Monitoring.** Turbidity monitoring before and after the tertiary treatment filters is required to determine the effectiveness of the treatment process and to assure compliance with the required level of disinfection.

5. **Pond Monitoring.** Pond monitoring is required to ensure proper operation of the pond when it is used as an emergency storage basin.

VII. RATIONALE FOR PROVISIONS

A. Standard Provisions

Standard Provisions, which apply to all NPDES permits in accordance with 40 CFR 122.41, and additional conditions applicable to specified categories of permits in accordance with 40 CFR 122.42, are provided in Attachment D. The Discharger must comply with all standard provisions and with those additional conditions that are applicable under 40 CFR 122.42.

Federal regulations, 40 CFR 122.41(a)(1) and (b) through (n) establish conditions that apply to all State-issued NPDES permits. These conditions must be incorporated into the permits either expressly or by reference. If incorporated by reference, a specific citation to the regulations must be included in the Order. 40 CFR 123.25(a)(12) allows the state to omit or modify conditions to impose more stringent requirements. In accordance with 40 CFR 123.25, this Order omits federal conditions that address enforcement authority specified in 40 CFR 122.41(j)(5) and (k)(2) because the enforcement authority under the CWC is more stringent. In lieu of these conditions, this Order incorporates by reference CWC section 13387(e).

B. Special Provisions

1. Reopener Provisions

a. **Whole Effluent Toxicity.**This Order requires the Discharger to investigate the causes of, and identify corrective actions to reduce or eliminate effluent toxicity through a Toxicity Reduction Evaluation (TRE). This Order may be reopened to include a numeric chronic toxicity limitation, a new acute toxicity limitation, and/or

a limitation for a specific toxicant identified in the TRE. Additionally, if a numeric chronic toxicity water quality objective is adopted by the State Water Board, this Order may be reopened to include a numeric chronic toxicity limitation based on that objective.

b. **Water Effects Ratio (WER) and Metal Translators.**A default WER of 1.0 has been used in this Order for calculating CTR criteria for applicable priority pollutant inorganic constituents. In addition, default dissolved-to-total metal translators have been used to convert water quality objectives from dissolved to total recoverable when developing effluent limitations for copper, lead, and zinc. If the Discharger performs studies to determine site-specific WERs and/or site-specific dissolved-to-total metal translators, this Order may be reopened to modify the effluent limitations for the applicable inorganic constituents.

c. **Disinfection Byproduct Study.**This Order requires the Discharger to conduct a study to determine what effects, if any, chlorine use for maintenance purposes will have on the effluent quality. This reopener provision allows the Central Valley Water Board to reopen this Order for addition of effluent limitations and requirements for certain constituents if after review of the study results it is determined that the discharge has reasonable potential to cause or contribute to an exceedance of water quality objectives.

2. Special Studies and Additional Monitoring Requirements

a. **Chronic Whole Effluent Toxicity Requirements.** The Basin Plan contains a narrative toxicity objective that states, "*All waters shall be maintained free of toxic substances in concentrations that produce detrimental physiological responses in human, plant, animal, or aquatic life.*" (Basin Plan at page III-8.01) As this is a new facility, adequate WET data are not available to determine if the discharge has reasonable potential to cause or contribute to an in-stream excursion above the Basin Plan's narrative toxicity objective.

The Monitoring and Reporting Program of this Order requires chronic WET monitoring for demonstration of compliance with the narrative toxicity objective. In addition to WET monitoring, this provision requires the Discharger to submit to the Central Valley Water Board an Initial Investigative TRE Work Plan for approval by the Executive Officer, to ensure the Discharger has a plan to immediately move forward with the initial tiers of a TRE, in the event effluent toxicity is encountered in the future. The provision also includes a numeric toxicity monitoring trigger, requirements for accelerated monitoring, and requirements for TRE initiation if effluent toxicity is demonstrated.

Monitoring Trigger.A numeric toxicity monitoring trigger of >1 TUc (where TUc = 100/NOEC) is applied in the provision, because this Order does not allow any dilution for the chronic condition. Therefore, a TRE is triggered when the effluent exhibits toxicity at 100% effluent.

Accelerated Monitoring. The provision requires accelerated WET testing when a regular WET test result exceeds the monitoring trigger. The purpose of accelerated monitoring is to determine, in an expedient manner, whether there is effluent toxicity before requiring the implementation of a TRE. Due to possible seasonality of the toxicity, the accelerated monitoring should be performed in a timely manner, preferably taking no more than 2 to 3 months to complete.

The provision requires accelerated monitoring consisting of four chronic toxicity tests in a six-week period (i.e., one test every two weeks) using the species that exhibited toxicity. Guidance regarding accelerated monitoring and TRE initiation is provided in the *Technical Support Document for Water Quality-based Toxics Control,* EPA/505/2-90-001, March 1991 (TSD). The TSD at page 118 states, "*EPA recommends if toxicity is repeatedly or periodically present at levels above effluent limits more than 20 percent of the time, a TRE should be required.*" Therefore, four accelerated monitoring tests are required in this provision. If no toxicity is demonstrated in the four accelerated tests, then it demonstrates that toxicity is not present at levels above the monitoring trigger more than 20 percent of the time (only 1 of 5 tests are toxic, including the initial test). However, notwithstanding the accelerated monitoring results, if there is adequate evidence of effluent toxicity (i.e., toxicity present exceeding the monitoring trigger more than 20 percent of the time), the Executive Officer may require that the Discharger initiate a TRE.

See the WET Accelerated Monitoring Flow Chart (Figure F-1), below, for further clarification of the accelerated monitoring requirements and for the decision points for determining the need for TRE initiation.

TRE Guidance. The Discharger is required to prepare a TRE workplan in accordance with USEPA guidance. Numerous guidance documents are available, as identified below:

- *Toxicity Reduction Evaluation Guidance for Municipal Wastewater Treatment Plants*, EPA/833-B-99/002, August 1999.
- *Generalized Methodology for Conducting Industrial Toxicity Reduction Evaluations (TREs)*, EPA/600/2-88/070, April 1989.
- *Methods for Aquatic Toxicity Identification Evaluations: Phase I Toxicity Characterization Procedures, Second Edition*, EPA 600/6-91/003, February 1991.
- *Toxicity Identification Evaluation: Characterization of Chronically Toxic Effluents, Phase I*, EPA/600/6-91/005F, May 1992.
- *Methods for Aquatic Toxicity Identification Evaluations: Phase II Toxicity Identification Procedures for Samples Exhibiting Acute and Chronic Toxicity, Second Edition*, EPA/600/R-92/080, September 1993.

- *Methods for Aquatic Toxicity Identification Evaluations: Phase III Toxicity Confirmation Procedures for Samples Exhibiting Acute and Chronic Toxicity, Second Edition*, EPA 600/R-92/081, September 1993.

- *Methods for Measuring the Acute Toxicity of Effluents and Receiving Waters to Freshwater and Marine Organisms, Fifth Edition*, EPA-821-R-02-012, October 2002.

- *Short-term Methods for Estimating the Chronic Toxicity of Effluents and Receiving Waters to Freshwater Organisms, Fourth Edition*, EPA-821-R-02-013, October 2002.

- *Technical Support Document for Water Quality-based Toxics Control*, EPA/505/2-90-001, March 1991.

Figure F-1
WET Accelerated Monitoring Flow Chart

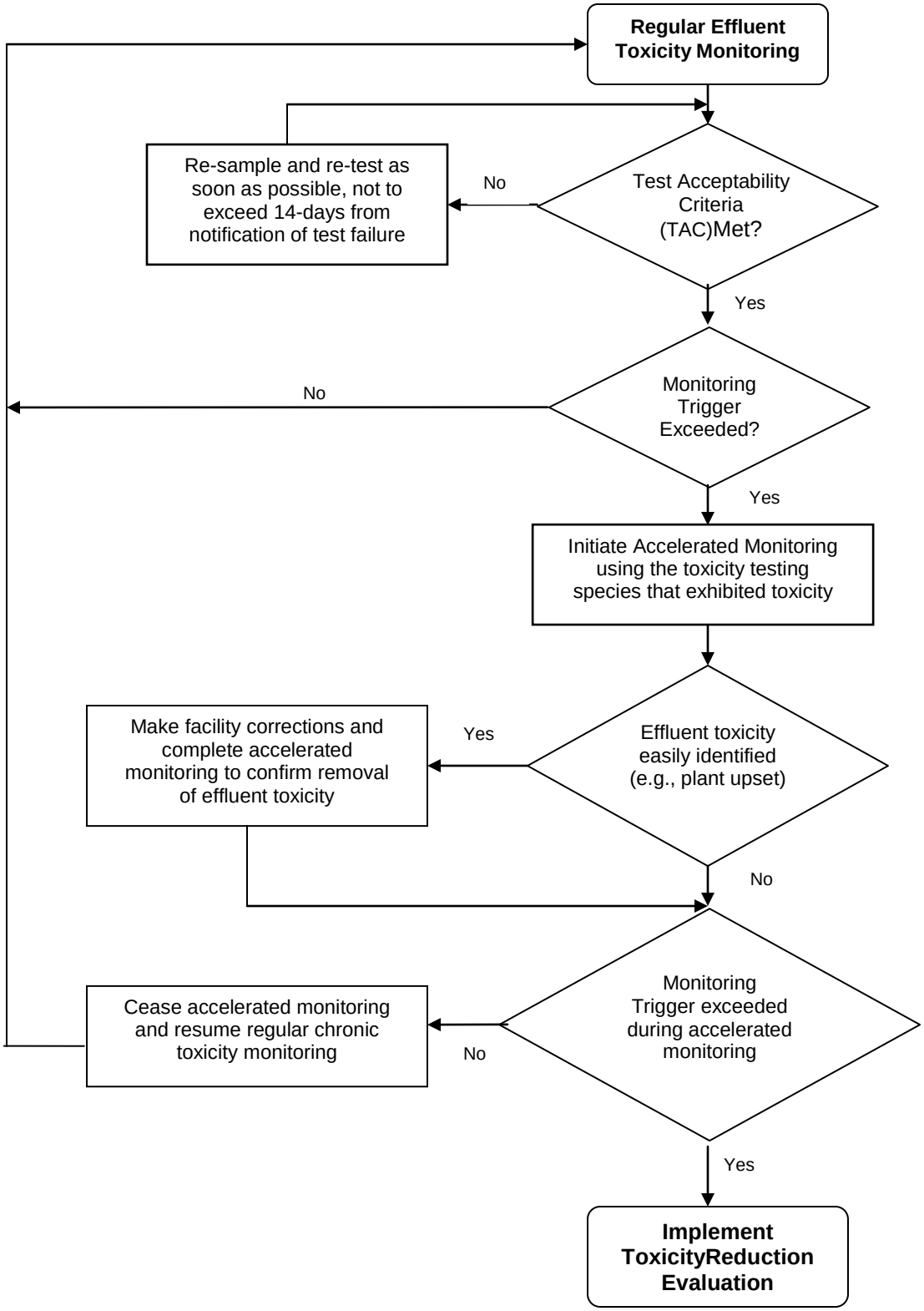

3.

b. Chlorpyrifos and Diazinon. This Order requires the Discharger to collect effluent and receiving water samples to determine if the discharge is in compliance with the waste load allocation for chlorpyrifos and diazinon in the Basin Plan. The data will be used to determine whether WQBELs are necessary in the subsequent NPDES permit renewal to achieve the water quality standards established under section 303 of the CWA.

3. Best Management Practices and Pollution Prevention

a. Salinity Evaluation and Minimization Plan. An Evaluation and Minimization Plan for salinity is required in this Order to ensure adequate measures are developed and implemented by the Discharger to reduce the discharge of salinity to Peck/Atwater Drain.

4. Construction, Operation, and Maintenance Specifications

a. Turbidity. Operational specifications for turbidity are included as an indicator of the effectiveness of the treatment process and to assure compliance with effluent limitations for total coliform. The tertiary treatment process that relies on media filtration is capable of reliably meeting a turbidity of 2 nephelometric turbidity units (NTU). Failure of the treatment system such that virus removal is impaired would normally result in increased particles in the effluent, which can result in higher effluent turbidity. Turbidity has a major advantage for monitoring filter performance, allowing immediate detection of filter failure, and rapid corrective action. The operational specifications for turbidity included in this Order are specified in Title 22, CCR, sections 60301.320 and 60304.

b. UV Disinfection System. This Order includes requirements for operating and maintaining the UV disinfection system. Proper maintenance and operation ensure that the UV system properly disinfects the wastewater to meet effluent limitations.

c. Pond. This Order requires the Discharger to properly maintain and operate its emergency storage basin, which will also serve as its storm water retention pond.

5. Special Provisions for Municipal Facilities (POTWs Only)

a. Pretreatment Requirements.

i. The federal CWA section 307(b), and federal regulations, 40 CFR Part 403, require publicly owned treatment works to develop an acceptable industrial pretreatment program. A pretreatment program is required to prevent the introduction of pollutants, which will interfere with treatment plant operations or sludge disposal, and prevent pass through of pollutants that exceed water quality objectives, standards or permit limitations. Pretreatment requirements are imposed pursuant to 40 CFR Part 403.

ii. The Discharger shall implement and enforce its approved pretreatment program and is an enforceable condition of this Order. If the Discharger fails to perform the pretreatment functions, the Central Valley Water Board, the State Water Board, or USEPA may take enforcement actions against the Discharger as authorized by the CWA.

b. Biosolids. The sludge/biosolids provision is required to ensure compliance with State disposal requirement (Title 27, CCR, Division 2, Subdivision 1, section 20005, et seq.) and USEPA sludge/biosolids use and disposal requirements at 40 CFR Part 503.

c. Collection System. The State Water Board issued General Waste Discharge Requirements for Sanitary Sewer Systems, Water Quality Order No. 2006-0003-DWQ (General Order) on 2 May 2006. The General Order requires public agencies that own or operate sanitary sewer systems with greater than one mile of pipes or sewer lines to enroll for coverage under the General Order. The General Order requires agencies to develop sanitary sewer management plans (SSMPs) and report all sanitary sewer overflows (SSOs), among other requirements and prohibitions.

Furthermore, the General Order contains requirements for operation and maintenance of collection systems and for reporting and mitigating sanitary sewer overflows. Inasmuch that the Discharger's collection system is part of the system that is subject to this Order, certain standard provisions are applicable as specified in Special Provision, Section VI.C.5.a. For instance, the 24-hour reporting requirements in this Order are not included in the General Order. The Discharger must comply with both the General Order and this Order. The Discharger and public agencies that are discharging wastewater into the Facility were required to obtain enrollment for regulation under the General Order by 1 December 2006.

6. Other Special Provisions

a. CWC section 13385(j)(1)(D)(i) allows dischargers to obtain protection from mandatory minimum penalties for a certain period of time after start up of new treatment units. If the Discharger wishes to obtain protection from mandatory minimum penalties, it must comply with the requirements in the CWC sections 13385(j)(1)(D)(i)(I) through (V).

b. This Order requires the Discharger to provide the Central Valley Water Board a copy of its agreement with Gallo Ranch for discharge to Peck Drain. The Discharger shall also inform the Central Valley Water Board when the agreement changes. The Discharger has previously been informed of what the agreement must contain to allow compliance with this Order (i.e., inspection and entry of Peck Drain).

7. Compliance Schedules – Not Applicable

VIII. PUBLIC PARTICIPATION

The Central Valley Water Board is considering the issuance of WDRs that will serve as a NPDES permit for the Facility. As a step in the WDRs adoption process, the Central Valley Water Board staff has developed tentative WDRs. The Central Valley Water Board encourages public participation in the WDRs adoption process.

A. Notification of Interested Parties

The Central Valley Water Board has notified the Discharger and interested agencies and persons of its intent to prescribe waste discharge requirements for the discharge and has provided them with an opportunity to submit their written comments and recommendations. Notification was provided through posting of a Notice of Public Hearing at the Facility, the city hall or county courthouse, and on the Central Valley Water Board's web site, and publication in the Merced Sun-Star newspaper on 21 September 2011.

B. Written Comments

The staff determinations are tentative. Interested persons are invited to submit written comments concerning these tentative WDRs. Comments must be submitted either in person or by mail to the Executive Officer at the Central Valley Water Board at the address above on the cover page of this Order.

To be fully responded to by staff and considered by the Central Valley Water Board, written comments must be received at the Central Valley Water Board offices by 5:00 p.m. on **21 October 2011**.

C. Public Hearing

The Central Valley Water Board will hold a public hearing on the tentative WDRs during its regular Board meeting on the following date and time and at the following location:

Date:	30 November or 1 or 2 December 2011
Time:	8:30 a.m.
Location:	Regional Water Quality Control Board, Central Valley Region 11020 Sun Center Dr., Suite #200 Rancho Cordova, CA 95670

Interested persons are invited to attend. At the public hearing, the Central Valley Water Board will hear testimony, if any, pertinent to the discharge, WDRs, and permit. Oral testimony will be heard; however, for accuracy of the record, important testimony should be in writing.

Please be aware that dates and venues may change. Our Web address is http://www.waterboards.ca.gov/centralvalley/ where you can access the current agenda for changes in dates and locations.

D. Waste Discharge Requirements Petitions

Any aggrieved person may petition the State Water Board to review the decision of the Central Valley Water Board regarding the final WDRs. The petition must be received within 30 days of the Central Valley Water Board's action to the following address:

State Water Resources Control Board
Office of Chief Counsel
P.O. Box 100, 1001 I Street
Sacramento, CA 95812-0100

E. Information and Copying

The Report of Waste Discharge, related documents, tentative effluent limitations and special provisions, comments received, and other information are on file and may be inspected at the following address at any time between 8:00 a.m. and 4:30 p.m., Monday through Friday. Copying of documents may be arranged through the Central Valley Water Board by calling (559) 445-5116. Our office is at 1685 "E" Street, Fresno, CA 93706.

F. Register of Interested Persons

Any person interested in being placed on the mailing list for information regarding the WDRs and NPDES permit should contact the Central Valley Water Board, reference this Facility, and provide a name, address, and phone number.

G. Additional Information

Requests for additional information or questions regarding this order should be directed to Aide Ortiz at (559) 445-6083.

ATTACHMENT G – SUMMARY OF REASONABLE POTENTIAL ANALYSIS

Constituent	Units	MEC	B	C	CMC	CCC	Water & Org	Org. Only	MCL	Reasonable Potential
Aluminum	µg/L	96	NA	200	750	--	--	--	200	No
Antimony	µg/L	0.41	0.51	6	--	--	14	4,300	6	No
Arsenic	µg/L	4.8	4.7	10	340	150	--	--	10	No
Cadmium	µg/L	1.0	0.26	1.5[1]/1.2[2]	1.5[1]/1.7[2]	1.5[1]/1.2[2]	--	--	5	No
Chromium	µg/L	1.7	1.4	50	--	--	--	--	50	No
Chromium VI	µg/L	0.19	0.47	11	16	11	--	--	--	No
Copper	µg/L	3.9	17	5.3[1]/4.4[2]	7.6[1]/6.0[2]	5.3[1]/4.4[2]	--	--	1000	Yes, B>C
Cyanide	µg/L	4.7	3.2	5.2	22	5.2	700	220,000	150	No
Iron	µg/L	45	NA	300	--	--	--	--	300	No
Lead	µg/L	0.53	11	1.2[1]/1.0[2]	30[1]/26[2]	1.2[1]/1.0[2]	--	--	15	Yes, B>C
Mercury	µg/L	0.006	0.0019	0.05	--	--	0.05	0.051	2	No
Manganese	µg/L	8.5	NA	50	--	--	--	--	50	No
Nickel	µg/L	1.2	2.6	30[1]/25[2]	270[1]/221[2]	30[1]/25[2]	610	4600	100	No
Silver	µg/L	0.11	<0.064	1.3[1]/0.88[2]	1.3[1]/0.88[2]	--	--	--	100	No
Thallium	µg/L	0.16	<0.054	1.7	--	--	1.7	6.3	2	No
Zinc	µg/L	44	77	69[1]/56[2]	69[1]/56[2]	69[1]/56[2]	--	--	5000	Yes, B>C
Bis(2-ethylhexyl)phthalate	µg/L	2.6	ND	1.8	--	--	1.8	5.9	4	Indeterminate
1,3 Dichlorobenzene	µg/L	0.17	<0.05	400	--	--	400	2600	--	No
1,4 Dichlorobenzene	µg/L	0.18	0.23	5	--	--	400	2600	5	No
Chloroform	µg/L	27	<0.05	80	--	--	--	--	80	No
Dibromochloromethane	µg/L	2.4	<0.067	0.41	--	--	0.41	34	80	Indeterminate[3]
Dichlorobromomethane	µg/L	8.8	<0.15	0.56	--	--	0.56	46	80	Indeterminate[3]
Toluene	µg/L	0.07	0.14	150	--	--	6800	200000	150	No
Diethyl phthalate	µg/L	0.95	<0.33	23,000	--	--	23000	120000	--	No
Chloride	mg/L	59	53	106[6]	860	230	--	--	250	No
Sulfate	mg/L	61	67	250	--	--	--	--	250	No
Ammonia	mg/L	1.5	4.3	2.2	5.7[4]	2.2/5.6[4,5]	--	--	50	Yes, B>C
Nitrate + Nitrite (as N)	mg/L	17	NA	10	--	--	--	--	10	Yes, MEC>C
Nitrite (as N)	mg/L	0.043	NA	1	--	--	--	--	1	No

Constituent	Units	MEC	B	C	CMC	CCC	Water & Org	Org. Only	MCL	Reasonable Potential

General Note: All inorganic concentrations are given as a total recoverable.
MEC = Maximum Effluent Concentration from existing Atwater Wastewater Treatment Plant
B = Maximum Receiving Water Concentration or lowest detection level, if non-detect
C = Criterion used for Reasonable Potential Analysis
CMC = Criterion Maximum Concentration (CTR or NTR)
CCC = Criterion Continuous Concentration (CTR or NTR)
Water & Org = Human Health Criterion for Consumption of Water & Organisms (CTR or NTR)
Org. Only = Human Health Criterion for Consumption of Organisms Only (CTR or NTR)
Basin Plan = Numeric Site-specific Basin Plan Water Quality Objective
MCL = Drinking Water Standards Maximum Contaminant Level

NA = Not Available
ND = Not Detected
Footnotes:
[1] Effluent criteria
[2] Background criteria
[3] The new Facility will use UV for disinfection; however the Discharge proposes to also use chlorine for operation and maintenance
[4] National Ambient Water Quality Criteria
[5] 30-day/4-day
[6] Most stringent agricultural objective possible

ATTACHMENT H – CALCULATION OF WQBELS

Parameter	Units	Most Stringent Criteria			Dilution Factors			HH Calculations			Aquatic Life Calculations									Final Effluent Limitations	
		HH	CMC	CCC	HH	CMC	CCC	ECA_{HH} = $AMEL_{HH}$	AMEL/MDEL $Multiplier_{HH}$	$MDEL_{HH}$	ECA $Multiplier_{acute}$	LTA_{acute}	ECA $Multiplier_{chronic}$	$LTA_{chronic}$	Lowest LTA	AMEL $Multiplier_{95}$	$AMEL_{AL}$	MDEL $Multiplier_{99}$	$MDEL_{AL}$	Lowest AMEL	Lowest MDEL
Ammonia Nitrogen, Total (as N)	mg/L	--	5.73[1]	5.62[1,2] 2.25[1,3]	--	--	--	--	--	--	0.32	1.83	0.53[2] 0.78[3]	2.98[2] 1.76[3]	1.76	1.19	2.09	3.11	5.47	2.1	5.5
Copper, Total Recoverable	µg/L	200	7.6	5.3	--	--	--	200	2.01	401	0.32	2.44	0.53	2.80	2.44	1.55	3.79	3.11	7.60	3.8	7.6
Lead, Total Recoverable	µg/L	15	30	1.2	--	--	--	15	2.01	30	0.32	9.63	0.53	0.63	0.63	1.55	0.98	3.11	1.97	0.98	2.0
Zinc, Total Recoverable	µg/L	2000	69	69	--	--	--	2000	2.01	4012	0.32	22.1	0.53	36.4	22.1	1.55	34.4	3.11	69.0	34	69

[1] USEPA Ambient Water Quality Criteria
[2] 4-day
[3] 30-day

ATTACHMENT I – CALIFORNIA TOXICS RULE CONSTITUENTS

Table I-1. Priority Pollutants

CTR #	Constituent	CAS Number	Criterion Quantitation Limit µg/L or noted	Suggested Test Methods
1	Antimony	7440360	5	EPA 200.8
2	Arsenic	7440382	0.01	EPA 200.8
3	Beryllium	7440417	1	EPA 200.8
4	Cadmium	7440439	0.25	EPA 200.8
5a	Chromium (III)	7440473	2	EPA200.8
5b	Chromium (VI)	18540299	0.5	EPA 218.6
6	Copper	7440508	0.5	EPA 200.8
7	Lead	7439921	0.5	EPA 200.8
8	Mercury	7439976	0.0002	EPA 1631
9	Nickel	7440020	5	EPA 200.8
10	Selenium	7782492	5	EPA 200.8
11	Silver	7440224	1	EPA 200.8
12	Thallium	7440280	1	EPA 200.8
13	Zinc	7440666	10	EPA 200.8
14	Cyanide	57125	5	EPA 9012A
15	Asbestos	1332214	0.2 MFL >10µm	EPA/600/R-93/116(PCM)
16	2,3,7,8-TCDD (Dioxin)	1746016	5.00E-06	EPA 8290(HRGC) MS
17	Acrolein	107028	2	EPA 8260B
18	Acrylonitrile	107131	2	EPA 8260B
19	Benzene	71432	0.5	EPA 8260B
20	Bromoform	75252	0.5	EPA 8260B
21	Carbon tetrachloride	56235	0.5	EPA 8260B
22	Chlorobenzene (mono chlorobenzene)	108907	0.5	EPA 8260B
23	Dibromochloromethane	124481	0.5	EPA 8260B
24	Chloroethane	75003	0.5	EPA 8260B
25	2-Chloroethyl vinyl ether	110758	1	EPA 8260B
26	Chloroform	67663	0.5	EPA 8260B
27	Dichlorobromomethane	75274	0.5	EPA 8260B
28	1,1-Dichloroethane	75343	0.5	EPA 8260B
29	1,2-Dichloroethane	107062	0.5	EPA 8260B
30	1,1-Dichloroethylene	75354	0.5	EPA 8260B
31	1,2-Dichloropropane	78875	0.5	EPA 8260B
32	1,3-Dichloropropylene	542756	0.5	EPA 8260B
33	Ethylbenzene	100414	0.5	EPA 8260B
34	Bromomethane	74839	1	EPA 8260B

CTR #	Constituent	CAS Number	Criterion Quantitation Limit µg/L or noted	Suggested Test Methods
35	Chloromethane	74873	0.5	EPA 8260B
36	Dichloromethane	75092	0.5	EPA 8260B
37	1,1,2,2-Tetrachloroethane	79345	0.5	EPA 8260B
38	Tetrachloroethylene	127184	0.5	EPA 8260B
39	Toluene	108883	0.5	EPA 8260B
40	trans-1,2-Dichloroethylene	156605	0.5	EPA 8260B
41	1,1,1-Trichloroethane	71556	0.5	EPA 8260B
42	1,1,2-Trichloroethane	79005	0.5	EPA 8260B
43	Trichloroethylene	79016	0.5	EPA 8260B
44	Vinyl chloride	75014	0.5	EPA 8260B
45	2-Chlorophenol	95578	2	EPA 8270C
46	2,4-Dichlorophenol	120832	1	EPA 8270C
47	2,4-Dimethylphenol	105679	2	EPA 8270C
48	4,6-Dinitro-2-methylphenol	534521	10	EPA 8270C
49	2,4-Dinitrophenol	51285	5	EPA 8270C
50	2-Nitrophenol	25154557	10	EPA 8270C
51	4-Nitrophenol	100027	5	EPA 8270C
52	4-Chloro-3-methylphenol	59507	5	EPA 8270C
53	Pentachlorophenol	87865	0.2	EPA 8270C
54	Phenol	108952	1	EPA 8270C
55	2,4,6-Trichlorophenol	88062	10	EPA 8270C
56	Acenaphthene	83329	1	EPA 8270C
57	Acenaphthylene	208968	10	EPA 8270C
58	Anthracene	120127	10	EPA 8270C
59	Benzidine	92875	5	EPA 8270C
60	1,2-Benzanthracene	56553	5	EPA 8270C
61	Benzo(a)pyrene (3,4-Benzopyrene)	50328	0.1	EPA 8270C
62	3,4-Benzofluoranthene	205992	10	EPA 8270C
63	Benzo(g,h,i)perylene	191242	5	EPA 8270C
64	Benzo(k)fluoranthene	207089	2	EPA 8270C
65	Bis(2-chloroethoxy) methane	111911	5	EPA 8270C
66	Bis(2-chloroethyl) ether	111444	1	EPA 8270C
67	Bis(2-chloroisopropyl) ether	39638329	10	EPA 8270C
68	Bis(2-ethylhexyl) phthalate	117817	3	EPA 8270C
69	4-Bromophenyl phenyl ether	101553	10	EPA 8270C
70	Butyl benzyl phthalate	85687	10	EPA 8270C
71	2-Chloronaphthalene	91587	10	EPA 8270C
72	4-Chlorophenyl phenyl ether	7005723	5	EPA 8270C

CTR #	Constituent	CAS Number	Criterion Quantitation Limit µg/L or noted	Suggested Test Methods
73	Chrysene	218019	5	EPA 8270C
74	Dibenzo(a,h)-anthracene	53703	0.1	EPA 8270C
75	1,2-Dichlorobenzene	95501	0.5	EPA 8260B
76	1,3-Dichlorobenzene	541731	0.5	EPA 8260B
77	1,4-Dichlorobenzene	106467	0.5	EPA 8260B
78	3,3'-Dichlorobenzidine	91941	5	EPA 8270C
79	Diethyl phthalate	84662	2	EPA 8270C
80	Dimethyl phthalate	131113	2	EPA 8270C
81	Di-n-butylphthalate	84742	10	EPA 8270C
82	2,4-Dinitrotoluene	121142	5	EPA 8270C
83	2,6-Dinitrotoluene	606202	5	EPA 8270C
84	Di-n-octylphthalate	117840	10	EPA 8270C
85	1,2-Diphenylhydrazine	122667	1	EPA 8270C
86	Fluoranthene	206440	10	EPA 8270C
87	Fluorene	86737	10	EPA 8270C
88	Hexachlorobenzene	118741	1	EPA 8260B
89	Hexachlorobutadiene	87683	1	EPA 8260B
90	Hexachlorocyclopentadiene	77474	1	EPA 8270C
91	Hexachloroethane	67721	1	EPA 8260B
92	Indeno(1,2,3-c,d)pyrene	193395	0.05	EPA 8270C
93	Isophorone	78591	1	EPA 8270C
94	Naphthalene	91203	10	EPA 8260B
95	Nitrobenzene	98953	10	EPA 8270C
96	N-Nitrosodimethylamine	62759	5	EPA 8270C
97	N-Nitrosodi-n-propylamine	621647	5	EPA 8270C
98	N-Nitrosodiphenylamine	86306	1	EPA 8270C
99	Phenanthrene	85018	5	EPA 8270C
100	Pyrene	129000	10	EPA 8270C
101	1,2,4-Trichlorobenzene	120821	0.5	EPA 8260B
102	Aldrin	309002	0.005	EPA 8081A
103	alpha-Hexachlorocyclohexane (BHC)	319846	0.01	EPA 8081A
104	beta-Hexachlorocyclohexane	319857	0.005	EPA 8081A
105	Lindane (gamma-Hexachlorocyclohexane)	58899	0.019	EPA 8081A
106	delta-Hexachlorocyclohexane	319868	0.005	EPA 8081A
107	Chlordane	57749	0.1	EPA 8081A
108	4,4'-DDT	50293	0.01	EPA 8081A
109	4,4'-DDE	72559	0.01	EPA 8081A
110	4,4'-DDD	72548	0.02	EPA 8081A

CTR #	Constituent	CAS Number	Criterion Quantitation Limit µg/L or noted	Suggested Test Methods
111	Dieldrin	60571	0.01	EPA 8081A
112	alpha-Endosulfan	959988	0.02	EPA 8081A
113	beta-Endosulfan	33213659	0.01	EPA 8081A
114	Endosulfan sulfate	1031078	0.05	EPA 8081A
115	Endrin	72208	0.01	EPA 8081A
116	Endrin Aldehyde	7421934	0.01	EPA 8081A
117	Heptachlor	76448	0.01	EPA 8081A
118	Heptachlor Epoxide	1024573	0.01	EPA 8081A
119	PCB-1016	12674112	0.5	EPA 8082
120	PCB-1221	11104282	0.5	EPA 8082
121	PCB-1232	11141165	0.5	EPA 8082
122	PCB-1242	53469219	0.5	EPA 8082
123	PCB-1248	12672296	0.5	EPA 8082
124	PCB-1254	11097691	0.5	EPA 8082
125	PCB-1260	11096825	0.5	EPA 8082
126	Toxaphene	8001352	0.5	EPA 8081A

Criterion Quantitation Limit (CQL). The criterion quantitation limits will be equal to or lower than the minimum levels (MLs) in Appendix 4 of the SIP or the detection limits for purposes of reporting (DLRs) below the controlling water quality criterion concentrations summarized in Table I-1 of this Order. In cases where the controlling water quality criteria concentrations are below the detection limits of all approved analytical methods, the best available procedure will be utilized that meets the lowest of the MLs and DLR. Table I-1 contains suggested analytical procedures. The Discharger is not required to use these specific procedures as long as the procedure selected achieves the desired minimum detection level.

Method Detection Limit (MDL). The Discharger shall request the laboratory to report MDLs for all constituents. The method detection limit for the laboratory shall be determined by the procedure found in 40 CFR Part 136, Appendix B.

ATTACHMENT J – DIOXIN AND FURAN SAMPLING

The CTR includes criteria for 2,3,7,8-tetrachlorodibenzo-pdioxin (2,3,7,8-TCDD). In addition to this compound, there are many congeners of chlorinated dibenzodioxins (2,3,7,8-CDDs) and chlorinated dibenzofurans (2,3,7,8-CDFs) that exhibit toxic effects similar to those of 2,3,7,8-TCDD. The USEPA has published toxic equivalency factors (TEFs) for 17 of the congeners. The TEFs express the relative toxicities of the congeners compared to 2,3,7,8-TCDD (whose TEF equals 1.0). In June 1997, participants in a World Health Organization (WHO) expert meeting revised TEF values for 1,2,3,7,8-PentaCDD, OctaCDD, and OctaCDF. The current TEFs for the 17 congeners, which include the three revised values, are shown below:

Toxic Equivalency Factors (TEFs) for 2,3,7,8-TCDD Equivalents

Congener	TEF
2,3,7,8-TetraCDD	1
1,2,3,7,8-PentaCDD	1.0
1,2,3,4,7,8-HexaCDD	0.1
1,2,3,6,7,8-HexaCDD	0.1
1,2,3,7,8,9-HexaCDD	0.1
1,2,3,4,6,7,8-HeptaCDD	0.01
OctaCDD	0.0001
2,3,7,8-TetraCDF	0.1
1,2,3,7,8-PentaCDF	0.05
2,3,4,7,8-PentaCDF	0.5
1,2,3,4,7,8-HexaCDF	0.1
1,2,3,6,7,8-HexaCDF	0.1
1,2,3,7,8,9-HexaCDF	0.1
2,3,4,6,7,8-HexaCDF	0.1
1,2,3,4,6,7,8-HeptaCDF	0.01
1,2,3,4,7,8,9-HeptaCDF	0.01
OctaCDF	0.0001

The Discharger shall conduct effluent and receiving water monitoring for the 2,3,7,8-TCDD congeners listed above to assess the presence and amounts of the congeners being discharged and already present in the receiving water. Effluent and upstream receiving water shall be monitored for the presence of the 17 congeners as directed in the Monitoring and Reporting Program (Attachment E).

The Discharger shall report, for each congener, the analytical results of the effluent and receiving water monitoring, including the quantifiable limit and the method detection limit, and the measured or estimated concentration.

In addition, the Discharger shall multiply each measured or estimated congener concentration by its respective TEF value and report the sum of these values.