Original Comments 1-10

Index to Rulemaking File Underground Storage Tank Regulations Title 23, Waters Division 3, Water Resources Control Board Chapter 16, Underground Storage Tank Regulations **1985**

FOR ALPHABETICAL LIST OF COMMENTERS SEE "VB"

SUBCHAPTER 16 #1

2.m

TULARE COUNTY
DEPARTMENT OF HEALTH SERVICES

Ronald W. Probasco
Director

Medical
Family Practice
Pediatrics/
Child Health
OB/GYN
Specialty Clinics
Air Pollution Control
California
Children's Services
Child Health and
Disability Prevention
Communicable
Disease Control
Environmental Health
Health Education
Nutrition Education
Public Health Lab
Public Health Nursing
Vital Statistics
W I C

June 25, 1984

State Water Resources Control Board
P.O. Box 100
Sacramento, Ca. 95812

Attn: Edward Anton Re: Underground Tank Regulations

Dear Mr. Anton:

The Tulare County Environmental Health Department has reviewed the initial draft of regulations aimed at regulating the Underground Storage of Hazardous Substances.

In view of the length and confusion of said articles, this office would like to take this opportunity to express to you several suggestions to relieve an expected burden on industry and local governing agencies.

Suggestions you may want to consider are as follows:

1. The State shall be responsible to work with the manufacturing industry to test and adopt state approved certified components and/or systems to satisfy the construction standards of integrated equipment.
2. The State shall supply regulatory agencies with a list of said certified components & systems. This would allow agencies to immediatly approve or disapprove proposed components and systems during the initial filing process.
3. The State shall provide local regulatory agencies with inspection technique guidelines to follow to allow inspectors to conduct specific site inspection at various times during the installation phase.
4. The State shall provide completely separate guidelines for existing tanks as well as for new tanks. The current draft has both existing and new tanks referred to in numerous articles throughout the draft causing much confusion and paper shuffling.

JUL 2 1984

PLEASE REPLY TO:

☐ Dinuba Health Ctr.
1451 E. El Monte
Dinuba, CA 93618
(209) 591-0942

☐ Hillman Health Ctr.
1062 South 'K' St.
Tulare, CA 93274
(209) 686-3461

☐ Lindsay Health Ctr.
755 North Sequia
Lindsay, CA 93247
(209) 562-6391

☐ Porterville Health Ctr.
378 North 2nd
Porterville, CA 93257
(209) 784-7800

☐ Visalia Health Ctr.
County Civic Ctr.
Visalia, CA 93291
(209) 733-6342/733-6441

5. The State shoud provide an organizational flow chart to show what responsibilities shall be expected by each regulatory agency.

6. The State shall provide local regulatory agencies with a set of criteria to follow in the enforcement of the standards (i.e. reporting requirements, forms, monitoring requirements, inspection requirements).

7. The State shall stipulate appropriate guidelines to follow when notified of contamination caused by a leaking tank. These guidelines will allow local agencies to make immediate notifications of said leaks to appropriate agencies.

8. The State shall provide layman language in the guidelines to allow local agencies and individual contractors an ease to understanding this currently complicated maze regulations.

9. The State shall provide graphic flow drawings to show proper tank depth, monitoring well depth, overfill protection depth, and other related equipment location criteria. This will allow local agenices an opportunity to show and discuss installation procedures with installers of said equipment.

10. Provide a flow diagram showing the steps to proceed through to determine how to handle various hazardous storage tanks as per attached.

It is our concern that we be able to provide a set of guidelines that are easily read and understood by all concerned parties.

Thank you for your consideration

Sincerely,

JWJohnson

J.W. Johnson
Environmental Control Specialist
Division of Environmental Health

JWJ:st

Attachments

cc: Loren Harlow, RWQCB
Dennis Otani, Kings Co. Health Dept.
Don Koepp, Ventura Co. Health Dept.

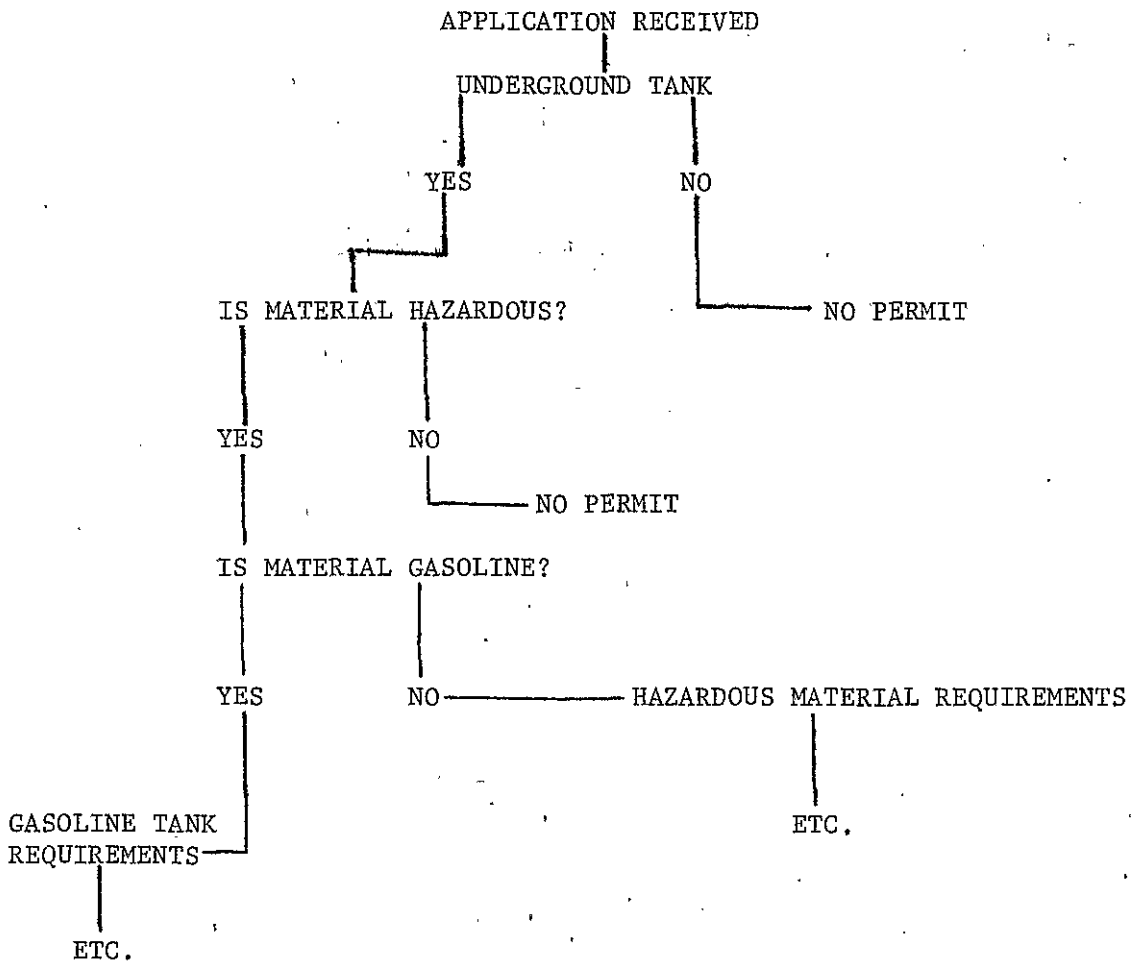
APPLICATION RECEIVED
UNDERGROUND TANK
YES
NO
NO PERMIT
IS MATERIAL HAZARDOUS?
YES
NO
NO PERMIT
IS MATERIAL GASOLINE?
YES
NO
HAZARDOUS MATERIAL REQUIREMENTS
ETC.
GASOLINE TANK REQUIREMENTS
ETC.

#1-B HS

TULARE COUNTY
DEPARTMENT OF HEALTH SERVICES

Ronald W. Probasco
Director

Medical
Family Practice
Pediatrics/
Child Health
OB/GYN
Specialty Clinics
Air Pollution Control
California
Children's Services
Child Health and
Disability Prevention
Communicable
Disease Control
Environmental Health
Health Education
Nutrition Education
Public Health Lab
Public Health Nursing
Vital Statistics
W I C

November 29, 1984

State Water Resources Control Board
P. O. Box 100
Sacramento, CA 95812

Attn: Mr. Edward Anton

Re: Underground Tank Regulations

Dear Mr. Anton:

The Tulare County Environmental Health Department has reviewed the "November 9, 1984," draft of the Underground Tank Regulations.

In view of the length and nature of the latest draft, this office feels there is still much over-kill in regards to the requirements your office set forth.

These regulations are still written with much confusion that will cause a local interpretation to evolve. Please see our previously submitted comments.

In addition, this office feels state mandated programs should be funded by the state. The imposition of fees on a local level can rarely cover all program costs. Additionally, this type of program generally provides a benefit to the public at large, and thus, the entire cost of a program should not be funded by the business involved. A more equitable approach would be to share the cost between business and the general population. This could be accomplished through some sort of subvention fund to local governing boards and a statewide fee collected by the state.

Sincerely,

Donald A. Johnson

Donald A. Johnson, Director
Division of Environmental Health

Received DIS
DEC 3 1984

DAJ/kb

cc: Lorie Mangine, Chair
Tulare County Board of Supervisors

PLEASE REPLY TO:

☐ Dinuba Health Ctr.
1451 E. El Monte
Dinuba, CA 93618
(209) 591-0942

☐ Hillman Health Ctr.
1062 South 'K' St.
Tulare, CA 93274
(209) 686-3461

☐ Lindsay Health Ctr.
755 North Sequia
Lindsay, CA 93247
(209) 562-6391

☐ Porterville Health Ctr.
378 North 2nd
Porterville, CA 93257
(209) 784-7800

☒ Visalia Health Ctr.
County Civic Ctr.
Visalia, CA 93291
(209) 733-6342/733-6441

SUBCHAPTER 16 #2

Morse Standard Inc.

August 3, 1984

Chief Ronald W. Bogardus, P.E.
State Fire Marshal
State of California
7171 Bowling Dr. (Suite 600)
Sacramento, CA 95823

Dear Chief Bogardus:

The Spill Lock fuel containment system is currently providing overfill protection at more than 6,000 underground storage tanks in Michigan where state fire authorities started enforcing regulations on July 13th. I am enclosing product information for your reference files.

We believe that Spill Lock will interest you as a means to comply with overfill protection and secondary containment regulations.

Spill Lock has an additional application where tank leak-monitoring systems are required. A common problem in using a fume detector as a monitoring device is that the backfill around the tank is often contaminated, not from leaks in the tank, but from surface spills. Properly installed at the fill pipe, Spill Lock prevents backfill contamination entirely, thereby making reliable fume detection feasible.

We would be very grateful if you would send us a copy of your state's storage regulations for hazardous materials such as motor fuels. Could you also let us know which procedures are to be followed for you to certify safety products intended for use in complying with state regulations?

I look forward to hearing from you.

Sincerely yours,

George Baker

George Baker

GB:ld

1000 Sansome Street
San Francisco, CA 94111

(415) 989-6260
Telex 759827 (JMSFO)

SPILL LOCK

Fuel Containment System™

Spill Lock is a fuel containment system for use in fill pipe manholes. When properly installed (see figure), Spill Lock prevents fuel spills from leaching into the soil and ground water. It has been accepted as an effective solution by the State Fire Marshall for fuel spillage control.

The system features a unique, granular sorbent that allows natural water drainage but solidifies fuel, making disposal and replacement clean, safe and simple.

Spill Lock Benefits

- Captures fuel spills
- Has low maintenance costs
- Is simple to install
- Will not leach
- Only contaminated sorbent needs replacement
- Can be handled easily before and after spillage
- Lets water drain through
- Eliminates fill box icing
- Dust free

Spill Lock is easy to install. To contain gasoline spills in a 12 inch access hole, only a 3 inch base of Spill Lock sorbent is required. A 6 inch base is recommended for diesel or gasohol. This fuel containment system adapts to round, square or oblong manholes.

Maintenance free until contaminated. Spill Lock sorbent is treated with a petroleum dye that changes color when contaminated by spilled fuel. Fuel-soaked granules bind together, dry out and become an easily-handled solid—with no dripping or secondary polution. Only those contaminated portions need to be replaced. Contaminated sorbent can be incinerated, or can be used as fuel for tramp oil generators.

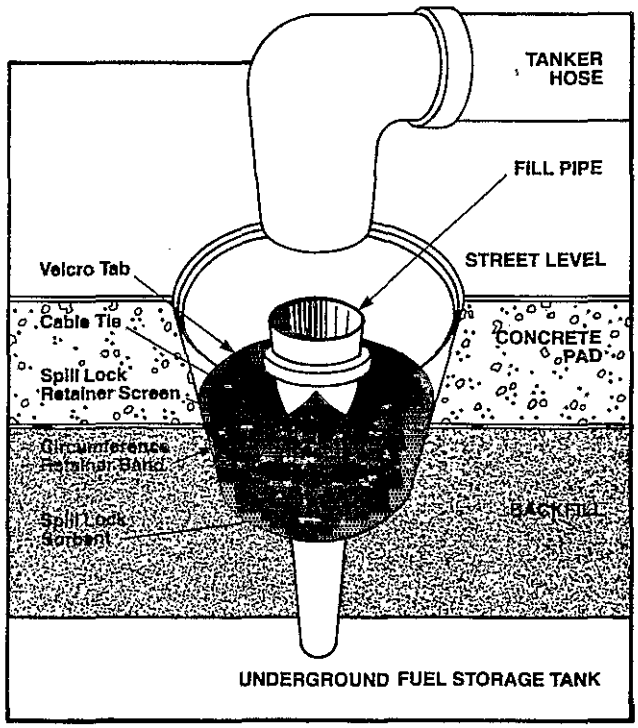

Spill Lock installed in a fill pipe manhole

DISTRIBUTED BY

Manufactured by Morse Standard Inc.
1000 Sansome St., San Francisco, CA 94111

State of California

State and Consumer Services Agency

Memorandum

AUG 22 1984 orig - Tech Services

: Michael Campos, Executive Director
State Water Resources Control Board
901 P Street
Sacramento, CA 95814

Date : August 17, 1984

File :

From : State Fire Marshal—Headquarters
7171 Bowling Drive, Suite 600
Sacramento, California 95823

Phone: (916) 427-4161
ATSS 466-4161

Subject:

The attached is self-explanatory. I'm sure any assistance you can provide to Mr. Baker would be appreciated.

JOAN JENNINGS
Deputy Director

JJ:ri

Attachment

Received DTS
AUG 22 1984

STATE OF CALIFORNIA—STATE AND CONSUMER SERVICES AGENCY

GEORGE DEUKMEJIAN, *Governor*

STATE FIRE MARSHAL
7171 BOWLING DRIVE, SUITE 600
SACRAMENTO, CALIFORNIA 95823

(916) 427-4161
ATSS 466-4161

August 14, 1984

Mr. George Baker
1000 Sansome Street
San Francisco, CA 94111

Dear Mr. Baker:

This is in response to your letter of August 3 requesting information on California's hazardous materials storage regulations. I have taken the liberty of referring your request to the State Water Resources Control Board which is the regulatory authority on this issue.

I am sure the Board can assist you in this matter.

Sincerely,

JOAN JENNINGS
Deputy Director

JJ:ri

cc: Michael Campos, Executive Director
State Water Resources Control Board

Subchapter 16 ~~1) PG~~
2 B 2) HS

Morse Standard Inc.

October 10, 1984

State Water Resources Control Board
P.O. Box 100
Sacramento, CA 95801

Attn: Mr. Harold Singer
Division of Technical Services

REF: Comments on the Draft of Sub-Chapter 16, Regulations for Hazardous Substances, Chap. 3 Waters, Title 23 of California Administrative Code

23 CAC SEC. 2610 Applicability
23 CAC SEC. 2635 (f) Overflow Protection System
23 CAC SEC. 2645 Vadose Zone Detection Monitoring

Dear Mr. Singer:

The purpose of this letter is to respond to your request for public comments on the draft of the proposed regulations. First, we commend the Board for its efforts to protect the citizens and businesses of California from the dangers of contaminated water. We believe that you have drawn up regulations with which both government and industry bodies will be able to comply.

Our comments stem mainly from our experience as manufacdturers of a product designed to comply with Michigan's overfill regulations for underground tanks. The product is currently in wide use in Michigan, where enforcement of regulations went into effect this past July. We will make reference to the specific Michigan regulations in our comments below.

We base our comments also on discussions in California with numerous county and municipal authorities in fire and public health agencies.

Received DTS
OCT 12 1984

1000 Sansome Street
San Francisco, CA 94111

(415) 989-6260
Telex 759827 (JMSFO)

Sec. 2610. APPLICABILITY.

The draft reads that the regulations "are intended to protect waters of the State from discharges of hazardous materials from underground tanks".

Our argument is that 1) the waters are to be protected from hazardous materials, 2) contamination occurs from causes associated with both storage and handling (filling and withdrawals) of hazardous materials in underground tanks.

Discharges from underground tanks occur at the time of product delivery when overfilling takes place. Spillage also occurs from hose and line discharges at the time of delivery. We therefore believe that your statement of purpose is too narrow; it should read "are intended to protect the waters of the State from contamination, whether by discharges, leaks or spills, by the storage or handling of hazardous materials in underground tanks".

Our argument is that all tanks, new and existing, should have some form of protection against overfills and surface discharges related to the delivery of the product to the underground tank.

We therefore recommend that the Board adopt the principle of requiring, on a state-wide basis, protection at the fill box for new and existing tanks. In this connection we call your attention to the text of the new Michigan rules which took effect on July 13, 1984. RULE 29.2352 (Overfilling tanks; prevention) applies to all tanks. Paragraph 2-9.2.3 reads:

> The area surrounding the fill pipe for an underground tank shall be protected in a manner to prevent the spillage of any liquid from reaching the soil or groundwaters.

23 CAC SEC. 2545 VADOSE ZONE DETECTION MONITORING

We support your decision to call for vadose monitoring system for existing tanks. Because the backfill of existing tanks is very likely to be contaminated by surface spills and tank overfills over an extended period of time; for this reason the vapor monitoring system should be calibrated at the time of installation, to allow for existing contamination in the backfill. Further, the integrity of the system should be protected against false alarms caused by spillage originating at the time of delivery or authorize release.

Please call on us for additional information or comments.

Sincerely yours,

John W. Morse
President

JWM:ld

SUBCHAPTER 16 #3

Evergreen Program

797 Montague Ave., San Leandro, CA 94577 • 895-2838

August 13, 1984

Harold Singer, Division of Technical Services
State Water Resources Control Board
P.O. Box 100
Sacramento, Calif. 95801

Dear Mr. Singer,

I am writing you regarding the adoption of proposed regulations governing underground storage of hazardous substances.

I have two major concerns regarding the proposed regulations that may or may not affect our program operation.

Evergreen is a day program for adults with developmental disabilities. We use our vans for transportation and community excursions. At present, there is a single pump on our premises which we use to pump gas into the vans each evening. Obviously, we can not gas the vans when participants are inside. Also, it would be costly and time consuming to take vans to a public gas station to fill them.

My first concern is: Would our permit be in jeopardy?

My second concern is permit costs. Will the costs be prohibitive for a small program like ours? Would we be eligible for state refunds?

An essential component of our program is integration of our participants into the community. We use our vans for both morning and afternoon excursions for over 130 adults. Public transportation is not a viable alternative for our adults since they are to ride public buses.

I ask that you keep small programs like ours in mind when you determine the regulations and the fees.

Respectfully,

Agnes Sullivan

Agnes Sullivan
Evergreen Program Director

AS:ng

SUBCHAPTER 16 #4A

CITY OF SAN JOSÉ, CALIFORNIA

SAN JOSE FIRE DEPARTMEI

801 N. FIRST STREET
ROOM 100
SAN JOSE, CA 95110
(408) 277-4656

VINCE CLET
Fire Chief

August 30, 1984

Edward C. Anton, Chief
Division of Technical Service
State Water Resources Control Board
P.O. Box 100
Sacramento, CA 9580

Dear Mr. Anton:

DRAFT UNDERGROUND TANK REGULATIONS 8/13/84

We are pleased to offer the following amendments to the above draft regulations, all of which merit your serious consideration.

1. Section 2611(a)(1)...delete "meets the requirements of Article 3 and Article 4 of this subchapter." This section is in conflict with AB1362 Section 25288; local jurisdictions are required to meet the intent of AB1362, and not meet Board regulations.
2. Section 2611(a)(1)(A)...delete section, as above.
3. Section 2611(a)(1)(B)...delete section. The county and city will provide state permit application forms to local permittees, with instructions to submit same to the Board.
4. Section 2611(a)(1)(C)....delete section. Local jurisdictions are exempt from these reporting requirements, and need only report discharges to OES.
5. Section 2620 Add: "Underground storage tank means any one or combination of tanks, including pipes connected thereto, which are used for the storage of hazardous substances, and which are substantially or totally beneath the surface of the ground." In compliance with AB1362 section 25280(m).
6. Section 2632(e). A "continuous sensor" is not necessary---visual or other means may be utilized.
7. Section 2633(f). Delete section. Secondary containment of piping is mandated by AB1362 section 25280(m) and section 25284.
8. Section 2634(c). Monitoring is not limited to a continous sensor by AB1362. Visual monitoring is preferred if practical.

9. Section 2635(f). Delete "when required by the local agency. Insert "but not restricted to" after "includes".

10. Section 2635(g). Delete this section. This section provides little or no effective overfill protection and is redundant in view of section 2635(f).

11. Section 2640(a). Delete...."and historic" (line 6) Delete..."and be capable of measuring groundwater quality directly."

    Section 2640(c), Section 2640(g) Delete these sections.

    AB1362 Section 25284.1 does not require detection of prior (or historic) releases, nor does it require direct measurement of groundwater.

12. Section 2642(d). Delete section, replace with "All ungerground storage tanks shall be tested every 5 years."

13. Section 2642....Add new subsection (i) "All secondary containment systems shall be tested for tightness upon installation, and every 5 years thereafter consistent with Section 2642(d).

14. Section 2644. Delete entire section. Soil testing and exploratory boring is not mandated by AB1362.

15. Section 2645....Delete entire section (Vadose zone monitoring to be included in Section 2646, as amended).

16. Section 2646....Add as subsection(b)(5) "Alternative leak detection methods are utilized which detect loss of material from primary container".

17. Section 2646(e). Insert at beginning: "In the absence of local water agency monitoring guidelines, which include evaluation of local hydrogeology, the principal ground water..."

18. Section 2647. Delete this section "Assurance Ground Water Monitoring" is not mandated by AB1362.

19. Section 2661(c)(2). Replace "one(1) inch" by "half inch" per San Jose City tank regpair guidelines (Exhibit A).

20. Section 2663(a). Add vacuum testing per UL recommendation (Exhibit B) and San Jose City tank repair guidelines (Exhibit A).

21. Section 2672(c)(3). Delete "sand or", consistent with San Jose City closure guidelines (Exhibit C).

22. Section 2672(d). Delete second sentence "This demonstration..." Delete "if feasible" (line 7). Soil testing is mandated by AB1362 upon tank closure, See Section 25286(c)(4).

Please contact this office is you require any further clarifications.

Sincerely,

Peter W. Jones.

Peter W. Jones, D.Phil
Hazardous Material Program
Manager

PWJ:bm

cc: Assemblyman Sher
Assemblyman Cortese
Roger James, Regional Board
John F. Felde, San Jose Fire Marshall
Santa Clara Fire Prevention Officers Association

Exhibit A

6/84

City of San Jose

HAZARDOUS MATERIALS ORDINANCE

Guidelines For Repair or Maintenance By Interior Coating of Nonpressurized Steel Storage Tank

This guideline states minimum requirements for the interior lining of underground and above ground tanks, and outlines the requirements and procedures that must be followed by contractors and engineers.

Legal Note:

Section 53076 of the Government Code provides for the repair of leaking underground storage tanks by the interior coating process.

General Provisions:

All necessary permits shall be acquired prior to any work being done. A tank repair work plan and detailed report of soil/water contamination shall be submitted for approval before any repair work shall begin. All work shall be completed using appropriate and safe methods. An approved contamination cleanup plan may be required. All work must be done in accordance with the current Federal and State Occupational Safety and Health Administration regulations (OSHA). All persons responsible for the health and safety of any workers shall be familiar with the information located in all pamphlets in Appendix A (attached).

Important:

Tanks will not be considered suitable for repair unless all of the following criteria are met. At any time it is determined that the criteria are not met, the tank must be removed or replaced in accordance with the SJHMO. The determination of whether minimum tank repair criteria has been met depends on inspection results after the tank has been cleaned in a safe manner, perforations reamed out to a minimum metal thickness of 50% of original wall thickness, and prepared to specifications required by the liner/coating manufacturer.

Minimum Criteria For Repairable Tank:

1. No single open seam or split shall be longer than three (3") inches nor within six (6") inches of head to shell seam; and,

2. No single perforation shall be larger than 1/2" diameter (in some instances a larger perforation may be determined suitable for third party certification) to assure structural integrity; and,

3. There shall be no more than ten perforations, none larger than 1/2" diameter, in the entire tank shell; and,

4. There shall be no more than two perforations, neither larger than 1/2" diameter, in any one foot square area of tank shell.

Procedures For Tank Lining:

1. Any leak must be reported to the Fire Prevention Bureau at 408/277-4656.

2. Measurements to determine the extent of any soil/water contamination resulting from a leaking tank must be initiated, for approval by the City.

3. A detailed work plan must be submitted for approval.

4. All sources of ignition must be removed from the surrounding area.

5. The tank must be capped and isolated.

6. All of the products must be removed from the tank before repair work can begin.

7. The tank must be thoroughly purged only with air to remove all flammable vapors.

8. The tank shall be tested with a combustible gas indicator, suitably calibrated on hexane in air. Readings of 10% of L.E.L. or less must be obtained before the tank can be opened. (NOTE: Tests with the combustible gas indicator should be performed periodically thereafter, to insure that tank vapors remain in the safe range.)

9. A minimum opening of 24" x 24" must be cut in to the top of the tank.

10. All accumulated sludge must be removed from the bottom of the tank and safely disposed of. (This will require documentation of safe disposal.)

11. The entire internal tank surface shall be white metal abrasive blasted, rendering it completely free of scale, rust and foreign matter. The entire interior surface of the tank must be visually inspected, and the structural integrity of the steel shell must be determined. Structural integrity is of critical concern.

12. An evaluation of the thickness of the tank* shall be made utilizing a non-destructive measuring device (ultra sound or Fire Marshal approved equivalent). Perforations, seams and thin metal areas shall be struck with a ballpen hammer sufficient to remove exterior rust and scale. The thickness measurements for the entire tank shall be recorded on the form attached to these guidelines (see Appendix B). Locations where metal thickness is demonstrated to be less than 50% of original wall thickness, may be considered to be perforations and require additional investigation.

13. Notify Fire Department Hazardous Materials Program (408-277-4656) for the first inspection, at least 24 hours in advance.

14. All perforations will be water-sealed with a nonmetallic plug, ground flush with the tank. Split seams will be water sealed.

* Minimum 3/16" thickness for 1/4" steel tank, and proportionately thicker for tanks made from thicker than 1/4" steel.

15. All plugged perforations and sealed seams will be permanently repaired with a steel plate, minimum 3/16" thickness, overlapping the seam/perforation by at least 3", curved to conform to tank radius. Finish of the repair will conform to liner/-coating manufacturer specifications.

16. Notify Fire Department Hazardous Materials Program (408-277-4656) for the second inspection, at least 24 hours in advance. (Third party certification may be accepted.)

17. Install the liner/coating according to manufacturer specifications. Certification of compatibility with stored product is required. Provide UL standard or equivalent for liner/coating process.

18. Be prepared to demonstrate the liner thickness and proper curing of coating. (Elcometer thickness gauge and Barcol Hardness Tester or Fire Marshal approved equivalents) per manufacturer specifications.

19. Inspect for liner defects, pinholes, using appropriate methods. Defects found are to be repaired per manufacturer specifications.

20. Notify the Fire Department Hazardous Materials Program (408-277-4656) for the third inspection, at least 24 hours in advance.

21. Tank closing - A cover plate shall be used with minimum thickness to be the thickness of tank wall (1/4" minimum). It should overlap the opening by at least 3" on each side. It shall be fastened to the tank using 1/2" minimum diameter bolts, per attached drawing (Appendix C).

22. Notify Fire Department Hazardous Materials Program (408-277-4656) for the final inspection, at least 24 hours in advance.

23. Pressure test cured tank at not less than 3 psi and not more than 5 psi for at least 1 hour. Vacuum test at 5.3" of mercury for one minute.

24. Listing mark serial number of liner/coating shall be attached to the repaired tank.

25. Interior lined underground tanks shall be cathodically protected.

Required Inspections.

Fire Department inspections are required:

1. After cleaning, reaming out perforations and preparation for liner/coating. This inspection is to verify that the tank meets the minimum criteria as above.

2. After all perforations and seams are repaired. (Third party certification may be accepted.)

3. After liner/coating installation, just prior to close up. This inspection will check for thickness, curing, and voids of the liner/coating.

4. During final pressure/vacuum testing. This inspection will also check that the listing mark serial number for liner/coating is properly attached to the tank. Check for installation of cathodic protection.

Approximate Inspection Times

Inspection	1	2	3	4	TOTAL
No. of Hours	1-2	1	1-2	1	3-6

See permit fee schedule regarding installation permit and inspection costs.

APPENDIX A

REFERENCE MATERIALS

ANSI Z117.1	Confined Spaces Safety
A.P.I. PUBLICATION 2015	A Guide for Controlling the Lead Hazard Associated with Tank Entry and Cleaning
A.P.I. R.P. 2003	Protection Against Ignitions Arising Out of Static, Lightning and Stray Currents.
A.P.I. R.P. 2027	Ignition Hazards Involved in Abrasive Blasting of Tanks in Service
N.F.P.A. Standard 77	Static Electricity
N.F.P.A. Standard 327	Cleaning Small Tanks and Containers.

0083:10:km

FIELD REPORT FOR SONIC TEST
Percent of Retention surrounding a Rupture in a Steel Tank

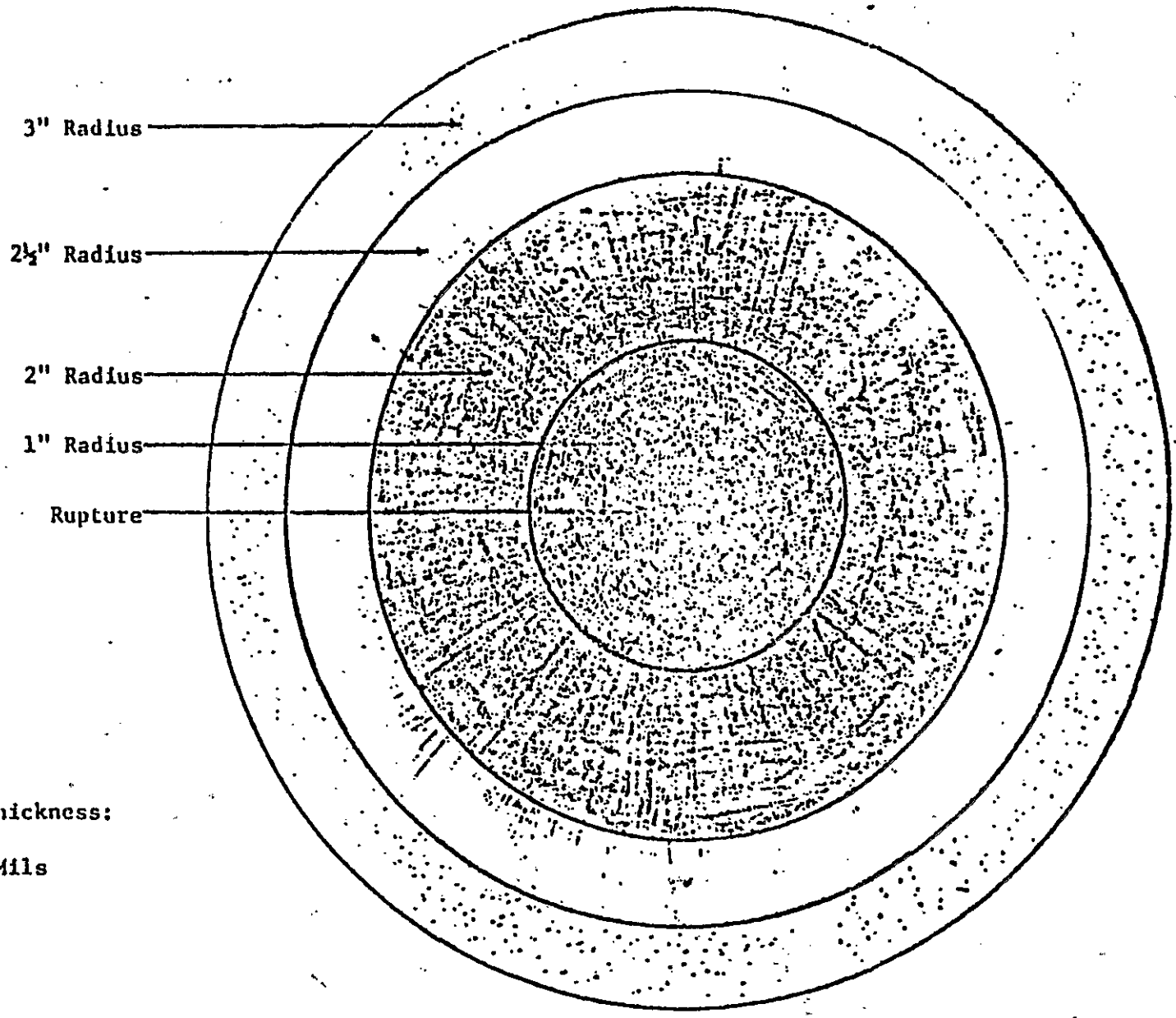

Original Thickness:

_____ Mils

Rupture	1" Radius	2" Radius	2½" Radius	3" Radius	Additional Area

%Remaining 0%

ULTRASONIC MEA[illegible]EMENT REPORT FORM

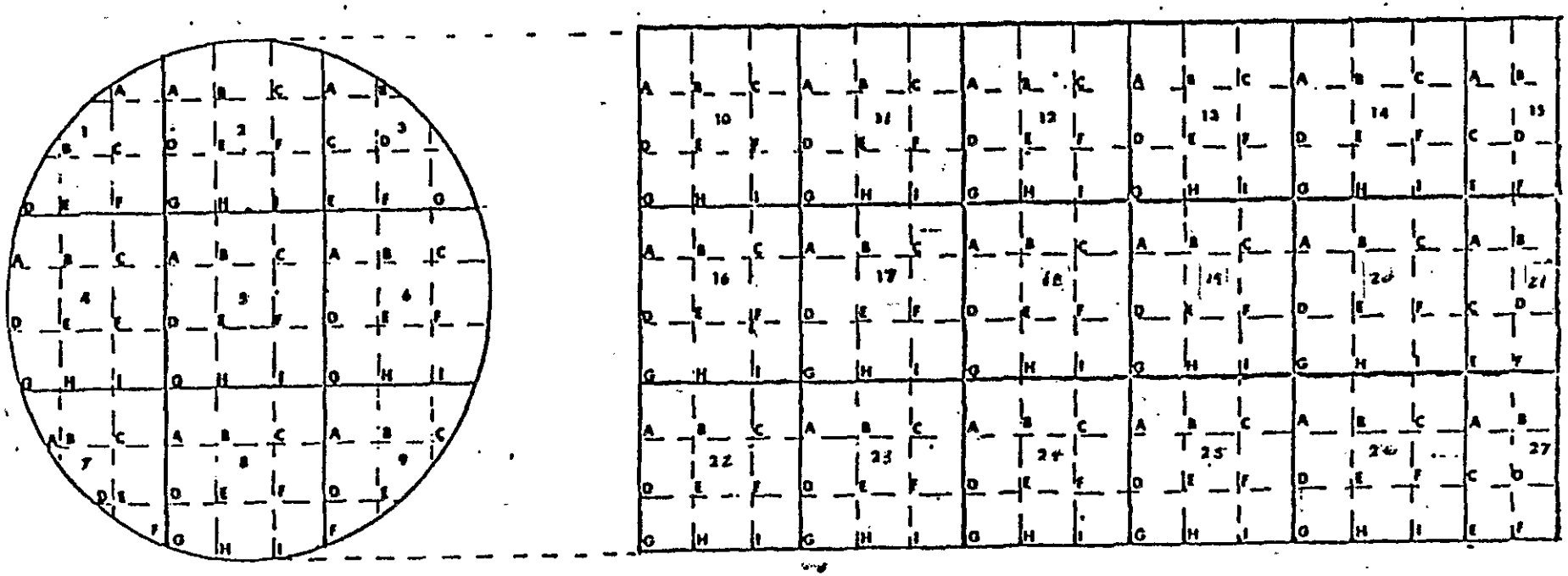

LEFT

BOTTOM

Tank should be inspected at the center point of each 3' quadrant. Quadrants under 3/16" thickness should be further inspected at the center point of each 1' quadrant within the original 3' quadrant. Indicate each test by marking the millage in the appropriate square.

Millage Conversion to inches:

31.25 = 1/32 of an inch		
62.50 = 1/16 of an inch		
187.5 = 3/16 of an inch		
250.0 = 4/16 of an inch	=	1/4
312.50 = 5/16 of an inch		
375.0 = 6/16 of an inch	=	3/8
437.50 = 7/16 of an inch		
500.0 = 8/16 of an inch	=	1/2
562.50 = 9/16 of an inch		
625.0 = 10/16 of an inch	=	5/8

Scale: 1" = 3'

Date of Inspection

CONVERSION

MILS		.625	.562.5	.500	.437.5	.375	.312	.250	.187.5	.125	.062.5	.3125	LEAK	PENSEAM
IN.		10/16		8/16		6/16		4/16		2/16				
IN.		5/8	9/16	1/2	7/16	3/8	5/16	1/4	3/16	1/8	1/16	1/32		
QUADRANT NO.	A													
	B													
	C													
	D													
	E													
	F													
	G													
	H													
	I													
QUADRANT NO.	A													
	B													
	C													
	D													
	E													
	F													
	G													
	H													
	I													
QUADRANT NO.	A													
	B													
	C													
	D													
	E													
	F													
	G													
	H													
	I													

MILS		.625	.562.5	.500	.437.5	.375	.312.5	.250	.187.5	.125	.062.5	.3125	LEAK	PENSEAM
IN.		10/16		8/16		6/16		4/16		2/16				
IN.		5/8	9/16	1/2	7/16	3/8	5/16	1/4	3/16	1/8	1/16	1/32		
QUADRANT NO.	A													
	B													
	C													
	D													
	E													
	F													
	G													
	H													
	I													
QUADRANT NO.	A													
	B													
	C													
	D													
	E													
	F													
	G													
	H													
	I													
QUADRANT NO.	A													
	B													
	C													
	D													
	E													
	F													
	G													
	H													
	I													

CONVERSION

LS IN. / IN.		.625 10/16 / 5/8	.562.5 / 9/16	.500 8/16 / 1/2	.437.5 / 7/16	.375 6/16 / 3/8	.312.5 / 5/16	.250 4/16 / 1/4	.187.5 / 3/16	.125 2/16 / 1/8	.62.5 / 1/16	.312.5 / 1/32	LEAK	PENS EAM
QUADRANT NO.	A													
	B													
	C													
	D													
	E													
	F													
	G													
	H													
	I													
QUADRANT NO.	A													
	B													
	C													
	D													
	E													
	F													
	G													
	H													
	I													
QUADRANT NO.	A													
	B													
	C													
	D													
	E													
	F													
	G													
	H													
	I													

LS IN. / IN.		.625 10/16 / 5/8	.562.5 / 9/16	.500 8/16 / 1/2	.437.5 / 7/16	.375 6/16 / 3/8	.312.5 / 5/16	.250 4/16 / 1/4	.187.5 / 3/16	.125 2/16 / 1/8	.62.5 / 1/16	.312.5 / 1/32	LEAK	PENS EAM.
QUADRANT NO.	A													
	B													
	C													
	D													
	E													
	F													
	G													
	H													
	I													
QUADRANT NO.	A													
	B													
	C													
	D													
	E													
	F													
	G													
	H													
	I													
QUADRANT NO.	A													
	B													
	C													
	D													
	E													
	F													
	G													
	H													
	I													

ULTRASONIC MEASUREMENT REPORT FORM

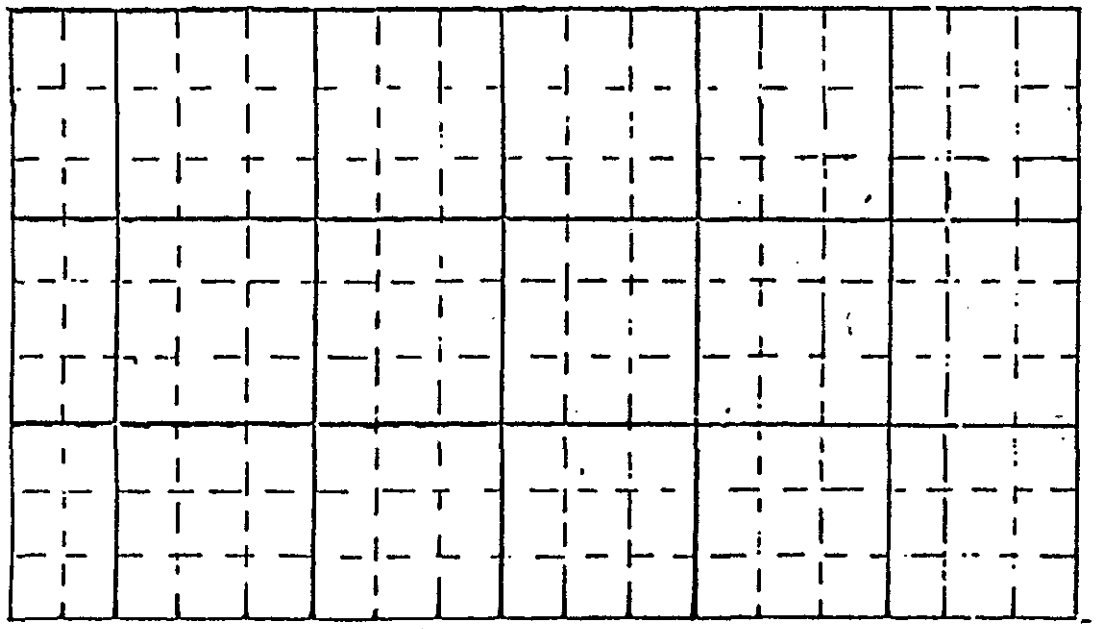

TOP

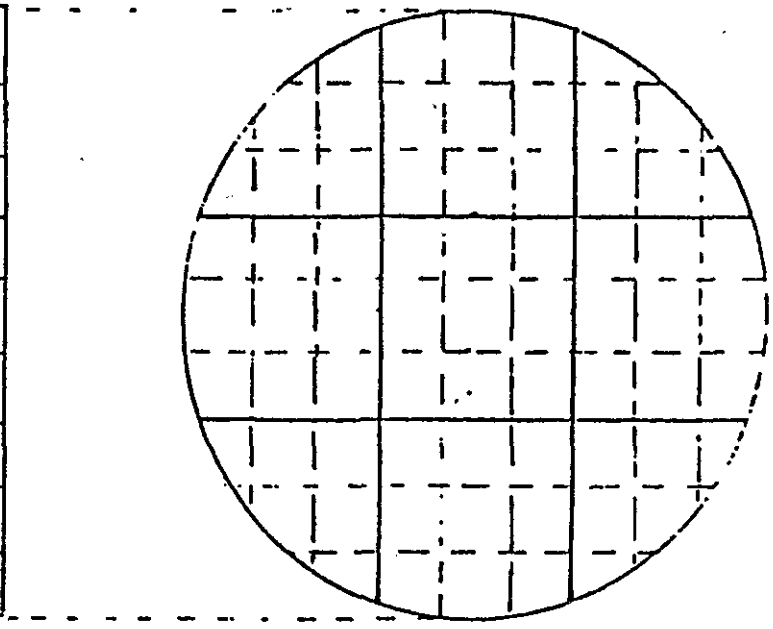

RIGHT

* Scale: 1" = 3'

Tank should be inspected at the center point of each 3' quadrant. Quadrants under 3/16" thickness should be further inspected at the center point of each 1' quadrant wihtin the original 3' quadrant. Indicate each test by marking the millage in the appropriate square.

Millage Conversion to inches:

31.25 = 1/32 of an inch
62.50 = 1/16 of an inch
187.5 = 3/16 of an inch
250.0 = 4/16 of an inch = 1/4
312.50 = 5/16 of an inch
375.0 = 6/16 of an inch = 3/8
437.50 = 7/16 of an inch
500.0 = 8/16 of an inch = 1/2
562.50 = 9/16 of an inch
625.0 = 10/16 of an inch = 5/8

INTERIOR LINING OF STEEL UNDERGROUND STORAGE TANKS

FIGURE 3

INSTALLATION OF TANK COVER PLATE

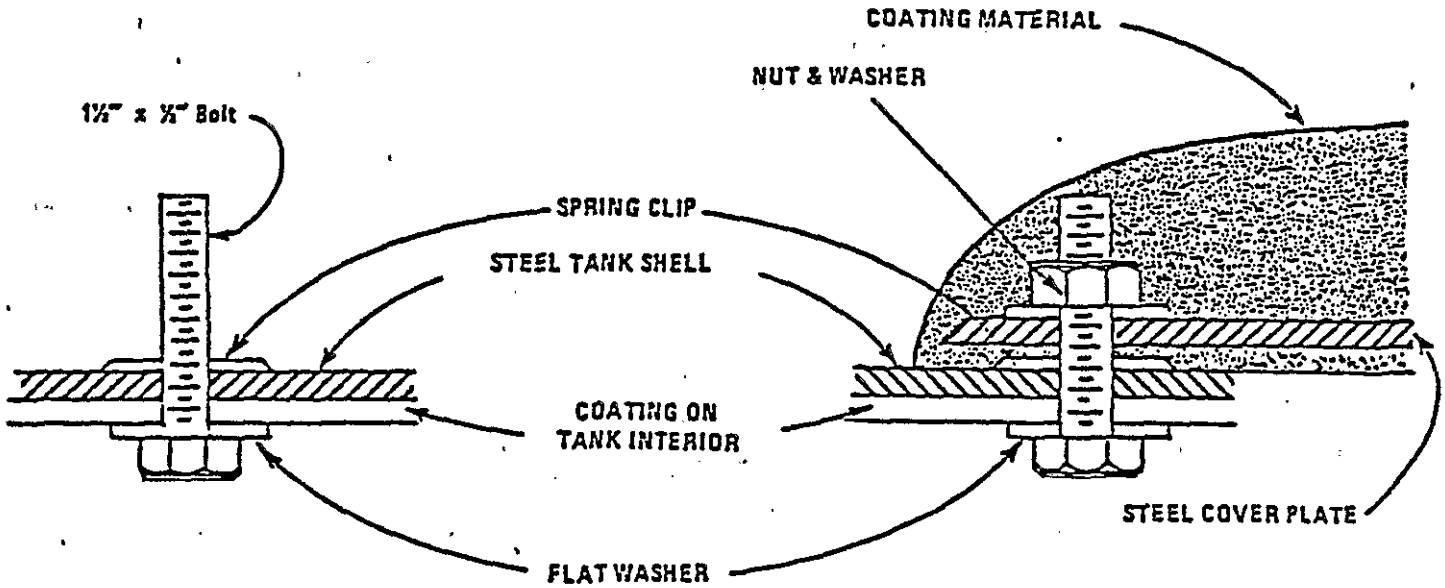

WITH BOLT IN PLACE PRIOR TO COVER INSTALLATION

WITH COVER BOLTED IN PLACE

CROSS SECTION

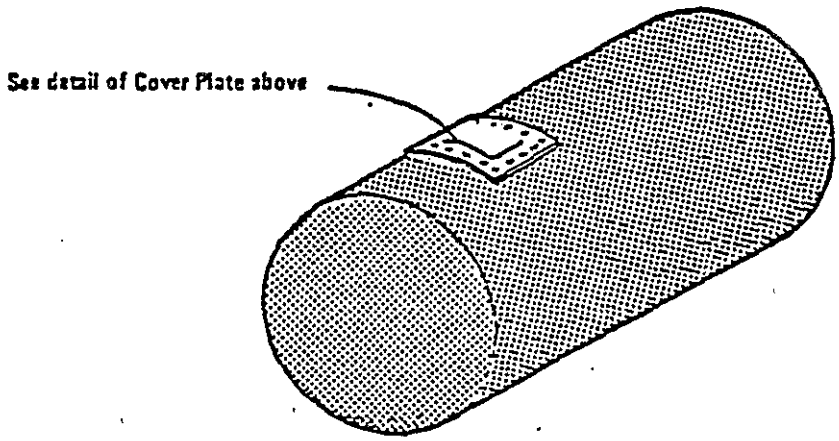

Exhibit B

UNDERWRITERS LABORATORIES INC.
NORTHBROOK, IL · MELVILLE, NY · SANTA CLARA, CA · TAMPA, FL

an independent, not-for-profit organization testing for public safety

333 Pfingsten Road
Northbrook, Illinois 60062

Subjects 58, 1316

April 23, 1984

TO: Manufacturer's of Steel Tanks, Composite Tanks, and Nonmetallic Tanks for Underground Storage of Flammable Liquids and/or Petroleum Products

SUBJECT: Lining of Underground Storage Tanks

UL provides two options for the investigation of tank linings: (1) Listing by Report for the complete lining process including an evaluation of the actual lining materials and (2) Component Recognition of the lining materials only. This Component Recognition would assist any applicators that wish to submit their lining process to UL for Listing by Report, in that it would not be necessary to repeat the evaluation of the lining materials.

Details of these two options are discussed below.

A. Listing by Report - UL's investigation is limited to the materials and application of the lining. The acceptability of the tank intended to be lined and the lining process will be under the jurisdiction of the inspection authority.

   UL's investigation consists of two basic elements: (1) exposure testing of coupons of the lining only and (2) physical testing of a lined tank. The tests involved are outlined in the Appendices A and B.

   Upon satisfactory completion of all the tests and examinations specified, a report is then prepared and sent to UL's Casualty and Fire Councils for comments. Listing is promulgated by means of a Listing Report.

B. Component Recognition - UL's investigation is limited to an evaluation of the coating material's resistance to the corrosive effects of stored flammable liquids as well as the material's resistance to permeation. The test program for Component Recognition is outlined in Appendix A; it does not include the tests outlined in Appendix B.

If you would like to submit drawings for review, please address your request to Mr. S. C. Slowik, Associate Project Engineer at UL's Northbrook office.

UNDERWRITERS LABORATORIES INC.

JOHN J. HAWLEY
Engineering Group Leader
Casualty and Chemical Hazards
Department

REVIEWED BY:

ROBERT G. HARRIS
Executive Staff Engineer
Manager
Casualty and Chemical Hazards
Department

SR:JES

A P P E N D I X A

TEST PROGRAM FOR EVALUATING TANK-LINING SYSTEMS

PHYSICAL TESTS OF LAMINATE:

METHOD

Five by nine inch (127 by 229 mm) lining samples are to be immersed in the solutions specified below and maintained at a temperature of 100°F (38°C). Specimens are also to be exposed in an air-circulating oven maintained at a temperature of 158°F (70°C). After 30, 90, 180 and, if necessary, 270 days, selected samples are to be removed from the solution and tested for flexural strength and Izod impact.

The specimens subjected to the flexural strength test are to be tested in accordance with the Test Method for Tensile Properties of Plastics Using Microtensile Specimens, ASTM D1708-79, using a cross head speed of 0.01 inch/minute (0.25 mm/minute).

The specimens to be subjected to the Izod impact test are to be tested in accordance with the Test Method for Impact Resistance of Plastics and Electrical Insulating Materials, ASTM D256-81.

SOLUTIONS OR IMMERSION

The following solutions are to be used for immersion of the samples:

1. Premium leaded gasoline
2. Regular unleaded gasoline
3. No. 2 fuel oil
4. ASTM Reference Fuel C.
5. Toluene
6. No. 6 fuel oil
7. 100-percent methanol
8. 200-percent ethanol
9. 50-percent ethanol, 50-percent ASTM Reference Fuel C

10. 50-percent ethanol, 50-percent ASTM Reference Fuel C

11. 85-percent Reference Fuel C, 15-percent methanol

12. 85-percent ASTM Reference Fuel C, 15-percent ethanol

13. 70-percent ASTM Reference Fuel C, 30-percent ethanol

14. Distilled water

PERMEANCE - COATING DISSOLUTION EVALUATION:

METHOD

Coupon samples of the lining only are to be bonded to glass dishes containing the immersion solutions. Before the samples are attached to the dishes, the thickness is to be measured in the center of each quadrant and these values are to be recorded for later use. The assemblies are to be weighed on an analytical balance. The assemblies are then to be inverted and placed in a 100°F (38°C) ambient chamber so that the solution will contact the test specimen.

To determine the rate or percent of transmission of the solution through the test specimen, the assemblies are to be reweighed after 30, 90, 180 and, if necessary, 270 days. At the conclusion of the test, the thickness of each sample is to be remeasured and any loss or swelling is to be recorded.

RESULTS

No permeance or dissolution of the liner material is to occur.

BONDING TO SURFACE:

METHOD

Steel coupons coated with the minimum thickness of liner material are to be bonded to glass cups filled with each of the immersion solutions and the assemblies are to be inverted so the solution contacts the surface. Before bonding the coupons to the cup, the hardness of the liner material is to be determined. Following each exposure period, the exposed liner material is to be visually examined and the hardness determined.

RESULTS

There shall not be any softening blistering or uplift of the liner material.

COLD IMPACT:

METHOD

Six by six inch (152 by 152 mm) sheets of the liner are to be conditioned for 16 hours in a cold box maintained at minus 20°F (minus 29°C). Each conditioned specimen, and additional unconditioned specimens, are to be clamped between two steel rings having an inside diameter of 4.25 inch (108 mm) and impacted once by dropping a 1.18 pound (535 g) steel sphere from a height of 6 feet (1.83 m) onto the surface of the specimen.

RESULTS

The samples shall not crack or show rupture of the liner.

A P P E N D I X B

TEST PROGRAM FOR EVALUATING THE STRUCTURAL SUITABILITY OF TANK-LINING SYSTEMS

PHYSICAL TESTS OF TANK:

METHOD

Using a tank selected by the manufacturer and judged by UL to meet the criteria outlined in the manufacturer's instructions, the following test and examination are to be conducted.

Note: The tank selected will become the basis for judging the acceptability of future tanks for the lining process.

1. The tank is to be inspected by a representative of UL's engineering staff and a detailed description of the tank's physical condition recorded.

2. The tank is then to be prepared by the manufacturers personnel and lined in accordance with the lining instructions.

3. A 5-psig (34.5-kPa) leakage and 5.3-inch (135-mm) Hg vacuum test are then to be performed, exactly as they are conducted during an actual lining procedure.

4. The tank is then to be tested for voids and holidays.

5. After the buried tank has been lined, the thank is to be excavated and placed at ground level for visual examination of the exterior.

6. The excavation is to be prepared for anchoring the tank as required.

7. The tank is to be repositioned in the excavation and anchored (tied down) to prevent float-out.

8. The tied-down tank is to be recovered with back fill material to grade and the entire excavation flooded for a 24 hours.

9. At the end of the 24-hour flooded condition, a vacuum of 5.3 inch (135 mm) Hg is to be applied for 1 minute to simulate an additional external pressure equivalent of 6-feet (1.83-m) of water.

10. Unless a metal deflector plate is provided to protect the area under the fittings from a dipstick, an impact test is to be conducted on the interior of the tank. A 2-pound (901-g) steel sphere is to be dropped from a height equal to the tank diameter so as to impact the area under the fitting opening.

RESULTS

As a result of the tests, there shall be no damage to the tank as evidence by cracking, buckling, or deformation. The tank is again to be tested for voids or holidays. In addition, there shall be no cracking of the lining material.

Exhibit C

7/84

San Jose Hazardous Materials Ordinance

GUIDELINES FOR PERMANENT CLOSURE OF

HAZARDOUS MATERIALS STORAGE FACILITIES

SCOPE:

A) Applies to existing hazardous materials storage facilities with intentions to permanently terminate the storage of hazardous materials.

B) Applies to out of service (abandoned) storage facilities which have not complied with closure requirements.

Closure plans should be submitted for approval to the Hazardous Materials Program, City of San Jose, at least 30 days prior to the termination of storage activity. Out-of-service facilities should submit closure plans as soon as possible, and no later than 90 days from the discovery of such facilities.

A closure plan is a statement of proposed actions to be performed by the facility owner (permittee) in order to render the storage facility safe. Actions should consist, at a minimum, of the following:

1. Provide name, address, and phone numbers of contractors retained to carry out any phase of the intended closure.

2. Provide brief description of storage facility and material stored. Include a plot plan of the storage facility to be closed.

3. If the storage facility has underground tank(s), or if there is any suspicion of soil contamination from any above-ground storage facilities, then soil sample(s) from area(s) likely to have the maximal amount of contamination shall be obtained and analyzed for residual hazardous materials, in an appropriate manner, by a laboratory. Information pertaining to the location of samples, sampling methods, test procedures, and test results shall be provided to the City.

4. Remove and properly dispose of, neutralize, or reuse all hazardous materials in an appropriate manner.

5. Remove or decontaminate all storage facilities in order to minimize present and future public health and environmental hazards. Service station underground tanks may be abandoned in place or removed:

   a. Tanks abandoned in place:

      1) All flammable or combustible liquid shall be removed from the tank and from all connecting lines.

2) The suction, inlet, gauge, and vent lines shall be disconnected.

3) The tank shall be filled completely with a concrete slurry capable of filling all voids and hardening to a solid material.

4) The remaining underground piping shall be capped.

5) When the tanks to be removed/abandoned have contained flammable or combustible liquids, a PERMIT must be applied for PRIOR TO REMOVAL/ABANDONING OF TANKS.

b. Tanks removed:

1) All flammable or combustible liquids in the tank and connecting lines shall be removed.

2) The suction, inlet, gauge, and vent lines shall be disconnected. Sections of connecting lines which are not to be used shall be removed. Inlets, outlets, and leaks, if any, shall be capped or plugged.

3) The tank shall be made safe for removal by the introduction of carbon dioxide gas. The addition of dry ice (15 lbs. per 1000 gallon capacity) is recommended to lower the oxygen concentration in the tank.

4) When the tanks to be removed/abandoned have contained flammable or combustible liquids, a PERMIT must be applied for PRIOR TO REMOVAL/ ABANDONING OF TANKS.

Upon satisfactory review and approval of the closure plan, and required permits have been applied for, a hazardous materials storage facility shall carry out the proposed actions. If there is indication of soil contamination, the permittee may be required to render the soil free from the residual hazardous materials through appropriate cleanup procedures.

0083H:3:km

SUBCHAPTER 16 #143

CITY OF SAN JOSÉ, CALIFORNIA

SAN JOSE FIRE DEPARTMENT

801 N. FIRST STREET
ROOM 100
SAN JOSE, CA 95110
(408) 277-4656

VINCE CLET
Fire Chief

October 1, 1984

Mr. Harold Singer
Division of Technical Services
State Water Resources Control Board
P.O. Box 100
Sacramento, CA 95801

Dear Mr. Singer:

Regulations for Underground Tank Storage of Hazardous Substances (Draft 8/23/84)

Further to our letter to Mr. Edward C. Anton dated 8/30/84 regarding the 8/13/84 Draft Regulations, the following comments are directed towards the subsequent 8/23/84 Draft Regulations.

In many instances, the 8/23/84 Draft Regulations do not precisely meet the intent of state law (Chapter 6.7 of Health and Safety Code, Section 25280 et seq), and in other instances seek to be more stringent than state law. We formally request consideration of all of the following comments, and request that the Statement of Reasons be modified to include discussion of the comments.

1. Section 2611(a)(1)...delete "meets the requirements of Article 3 and Article 4 of this subchapter." This section is in conflict with AB1362 Section 25288; local jurisdictions are required to meet the intent of AB1362, and not meet Board regulations.
2. Section 2611(a)(1)(A)...delete section, as above.
3. Section 2611(a)(1)(B)...delete section. The county and city will provide state permit application forms to local permittees, with instructions to submit same to the Board.
4. Section 2611(a)(1)(C)....delete section. Local jurisdictions are exempt from these reporting requirements, and need only report discharges to OES.
5. Section 2620 Add: "Underground storage tank means any one or combination of tanks, including pipes connected thereto, which are used for the storage of hazardous substances, and which are substantially or totally beneath the surface of the ground." In compliance with AB1362 section 25280(m).

Received DTS
OCT 4 1984

6. Section 2632(e). A "continuous sensor" is not necessary---visual or other means may be utilized.

7. Section 2633(f). Delete section. Secondary containment of piping is mandated by AB1362 section 25280(m) and section 25284.

8. Section 2634(c). Monitoring is not limited to a continous sensor by AB1362. Visual monitoring is preferred if practical.

9. Section 2635(f). Delete "when required by the local agency. Insert "but not restricted to" after "includes".

10. Section 2635(g). Delete this section. This section provides little or no effective overfill protection and is redundant in view of section 2635(f).

11. Section 2640(a). Delete...."and historic" (line 6) Delete..."and be capable of measuring groundwater quality directly."

    Section 2640(c), Section 2640(g) Delete these sections.

    AB1362 Section 25284.1 does not require detection of prior (or historic) releases, nor does it require direct measurement of groundwater.

12. Section 2642(d). Delete section, replace with "All ungerground storage tanks shall be tested every 5 years."

13. Section 2642....Add new subsection (i) "All secondary contaiment systems shall be tested for tightness upon installation, and every 5 years thereafter consistent with Section 2642(d).

14. Section 2644. Delete entire section. Soil testing and exploratory boring is not mandated by AB1362.

15. Section 2645....Delete entire section (Vadose zone monitoring to be included in Section 2646, as amended).

16. Section 2646....Add as subsection(b)(5) "Alternative leak detection methods are utilized which detect loss of material from primary container".

17. Section 2646(e). Insert at beginning: "In the absence of local water agency monitoring guidelines, which include evaluation of local hydrogeology, the principal ground water..."

18. Section 2647. Delete this section "Assurance Ground Water Monitoring" is not mandated by AB1362.

19. Section 2661(c)(2). Replace "one(1) inch" by "half inch" per San Jose City tank regpair guidelines (Exhibit A).

20. Section 2663(a). Add vacuum testing per UL recommendation (Exhibit B) and San Jose City Tank repair guidelines (Exhibit A).

21. Section 2672 (c) (3). Delete "sand or", consistent with San Jose City closure guidelines (Exhibit C).

22. Section 2672 (d). Delete second sentence "This demonstration..." Delete "if feasible" (line 7). Soil testing is mandated by AB1362 upon tank closure, See Section 25286 (c) (4).

We appreciate this opportunity to comment on these regulations, please contact this office if you require any further clarifications.

Sincerely,

Peter W. Jones

Peter W. Jones, D. Phil
Hazardous Material Program
Manager

PWJ:bm

cc: Edward C. Anton, State Water Resources Control Board
Assemblyman Sher
Assemblyman Cortese
Roger James, Regional Water Quality Control Board
John F. Felde, San Jose Fire Marshall
Santa Clara Fire Prevention Officers Association

Exhibit A

6/84

City of San Jose

HAZARDOUS MATERIALS ORDINANCE

Guidelines For Repair or Maintenance By Interior Coating of Nonpressurized Steel Storage Tank

This guideline states minimum requirements for the interior lining of underground and above ground tanks, and outlines the requirements and procedures that must be followed by contractors and engineers.

Legal Note:

Section 53076 of the Government Code provides for the repair of leaking underground storage tanks by the interior coating process.

General Provisions:

All necessary permits shall be acquired prior to any work being done. A tank repair work plan and detailed report of soil/water contamination shall be submitted for approval before any repair work shall begin. All work shall be completed using appropriate and safe methods. An approved contamination cleanup plan may be required. All work must be done in accordance with the current Federal and State Occupational Safety and Health Administration regulations (OSHA). All persons responsible for the health and safety of any workers shall be familiar with the information located in all pamphlets in Appendix A (attached).

Important:

Tanks will not be considered suitable for repair unless all of the following criteria are met. At any time it is determined that the criteria are not met, the tank must be removed or replaced in accordance with the SJHMO. The determination of whether minimum tank repair criteria has been met depends on inspection results after the tank has been cleaned in a safe manner, perforations reamed out to a minimum metal thickness of 50% of original wall thickness, and prepared to specifications required by the liner/coating manufacturer.

Minimum Criteria For Repairable Tank:

1. No single open seam or split shall be longer than three (3") inches nor within six (6") inches of head to shell seam; and,

2. No single perforation shall be larger than 1/2" diameter (in some instances a larger perforation may be determined suitable for third party certification) to assure structural integrity; and,

3. There shall be no more than ten perforations, none larger than 1/2" diameter, in the entire tank shell; and,

4. There shall be no more than two perforations, neither larger than 1/2" diameter, in any one foot square area of tank shell.

Procedures For Tank Lining:

1. Any leak must be reported to the Fire Prevention Bureau at 408/277-4656.

2. Measurements to determine the extent of any soil/water contamination resulting from a leaking tank must be initiated, for approval by the City.

3. A detailed work plan must be submitted for approval.

4. All sources of ignition must be removed from the surrounding area.

5. The tank must be capped and isolated.

6. All of the products must be removed from the tank before repair work can begin.

7. The tank must be thoroughly purged only with air to remove all flammable vapors.

8. The tank shall be tested with a combustible gas indicator, suitably calibrated on hexane in air. Readings of 10% of L.E.L. or less must be obtained before the tank can be opened. (NOTE: Tests with the combustible gas indicator should be performed periodically thereafter, to insure that tank vapors remain in the safe range.)

9. A minimum opening of 24" x 24" must be cut in to the top of the tank.

10. All accumulated sludge must be removed from the bottom of the tank and safely disposed of. (This will require documentation of safe disposal.)

11. The entire internal tank surface shall be white metal abrasive blasted, rendering it completely free of scale, rust and foreign matter. The entire interior surface of the tank must be visually inspected, and the structural integrity of the steel shell must be determined. Structural integrity is of critical concern.

12. An evaluation of the thickness of the tank* shall be made utilizing a non-destructive measuring device (ultra sound or Fire Marshal approved equivalent). Perforations, seams and thin metal areas shall be struck with a ballpen hammer sufficient to remove exterior rust and scale. The thickness measurements for the entire tank shall be recorded on the form attached to these guidelines (see Appendix B). Locations where metal thickness is demonstrated to be less than 50% of original wall thickness, may be considered to be perforations and require additional investigation.

13. Notify Fire Department Hazardous Materials Program (408-277-4656) for the first inspection, at least 24 hours in advance.

14. All perforations will be water-sealed with a nonmetallic plug, ground flush with the tank. Split seams will be water sealed.

* Minimum 3/16" thickness for 1/4" steel tank, and proportionately thicker for tanks made from thicker than 1/4" steel.

15. All plugged perforations and sealed seams will be permanently repaired with a steel plate, minimum 3/16" thickness, overlapping the seam/perforation by at least 3", curved to conform to tank radius. Finish of the repair will conform to liner/-coating manufacturer specifications.

16. Notify Fire Department Hazardous Materials Program (408-277-4656) for the second inspection, at least 24 hours in advance. (Third party certification may be accepted.)

17. Install the liner/coating according to manufacturer specifications. Certification of compatibility with stored product is required. Provide UL standard or equivalent for liner/coating process.

18. Be prepared to demonstrate the liner thickness and proper curing of coating. (Elcometer thickness gauge and Barcol Hardness Tester or Fire Marshal approved equivalents) per manufacturer specifications.

19. Inspect for liner defects, pinholes, using appropriate methods. Defects found are to be repaired per manufacturer specifications.

20. Notify the Fire Department Hazardous Materials Program (408-277-4656) for the third inspection, at least 24 hours in advance.

21. Tank closing - A cover plate shall be used with minimum thickness to be the thickness of tank wall (1/4" minimum). It should overlap the opening by at least 3" on each side. It shall be fastened to the tank using 1/2" minimum diameter bolts, per attached drawing (Appendix C).

22. Notify Fire Department Hazardous Materials Program (408-277-4656) for the final inspection, at least 24 hours in advance.

23. Pressure test cured tank at not less than 3 psi and not more than 5 psi for at least 1 hour. Vacuum test at 5.3" of mercury for one minute.

24. Listing mark serial number of liner/coating shall be attached to the repaired tank.

25. Interior lined underground tanks shall be cathodically protected.

Required Inspections.

Fire Department inspections are required:

1. After cleaning, reaming out perforations and preparation for liner/coating. This inspection is to verify that the tank meets the minimum criteria as above.

2. After all perforations and seams are repaired. (Third party certification may be accepted.)

3. After liner/coating installation, just prior to close up. This inspection will check for thickness, curing, and voids of the liner/coating.

4. During final pressure/vacuum testing. This inspection will also check that the listing mark serial number for liner/coating is properly attached to the tank. Check for installation of cathodic protection.

Approximate Inspection Times

Inspection	1	2	3	4	TOTAL
No. of Hours	1-2	1	1-2	1	3-6

See permit fee schedule regarding installation permit and inspection costs.

APPENDIX A

REFERENCE MATERIALS

ANSI Z117.1	Confined Spaces Safety
A.P.I. PUBLICATION 2015	A Guide for Controlling the Lead Hazard Associated with Tank Entry and Cleaning
A.P.I. R.P. 2003	Protection Against Ignitions Arising Out of Static, Lightning and Stray Currents.
A.P.I. R.P. 2027	Ignition Hazards Involved in Abrasive Blasting of Tanks in Service
N.F.P.A. Standard 77	Static Electricity
N.F.P.A. Standard 327	Cleaning Small Tanks and Containers.

0083:10:km

FIELD REPOR[illegible]OR SONIC TEST

Percent of Retention surrounding a Rupture in a Steel Tank

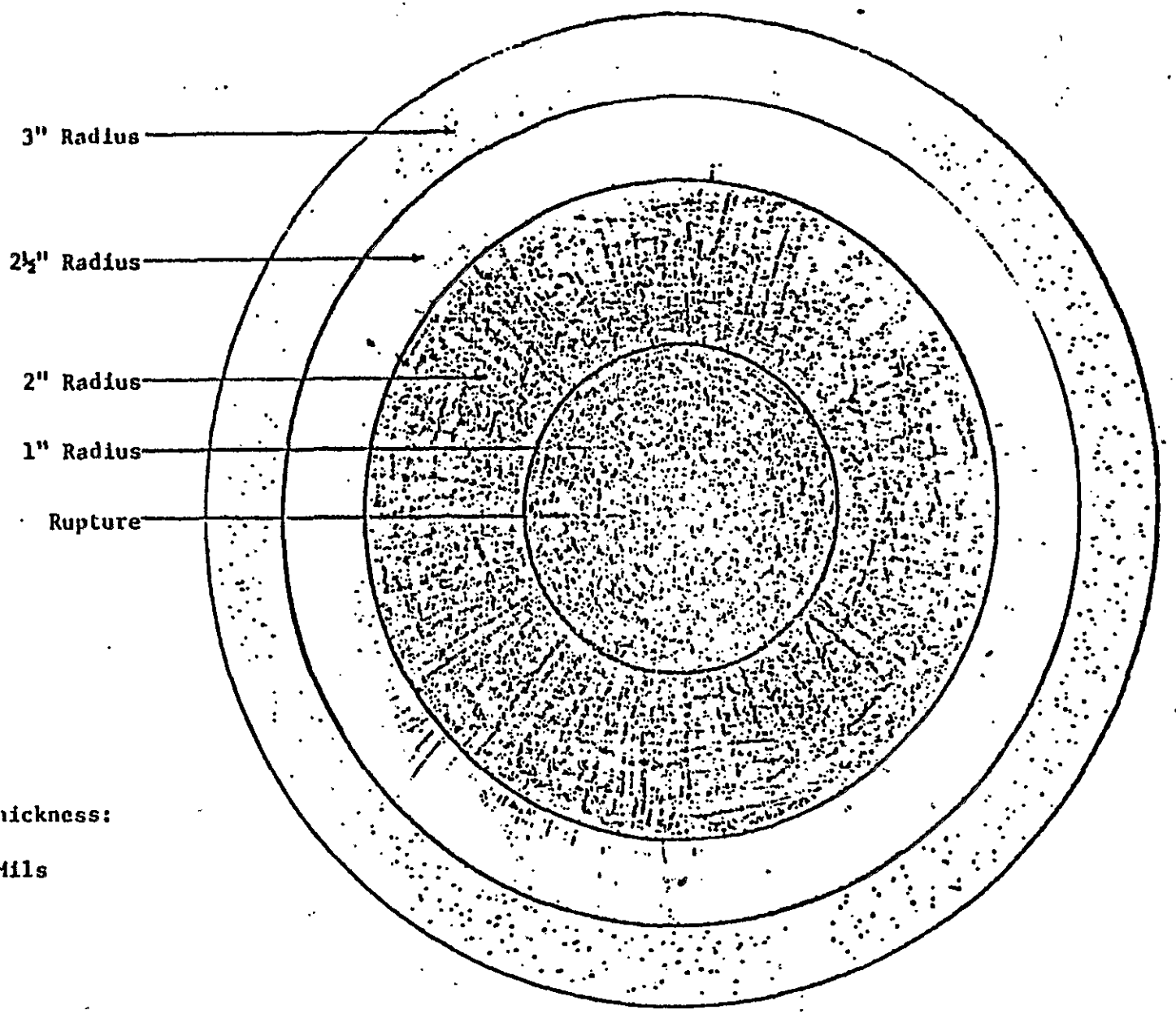

Original Thickness:

_____ Mils

Rupture	1" Radius	2" Radius	2½" Radius	3" Radius	Additional Area

%Remaining _____ 0%

ULTRASONIC MEASUREMENT REPORT FORM

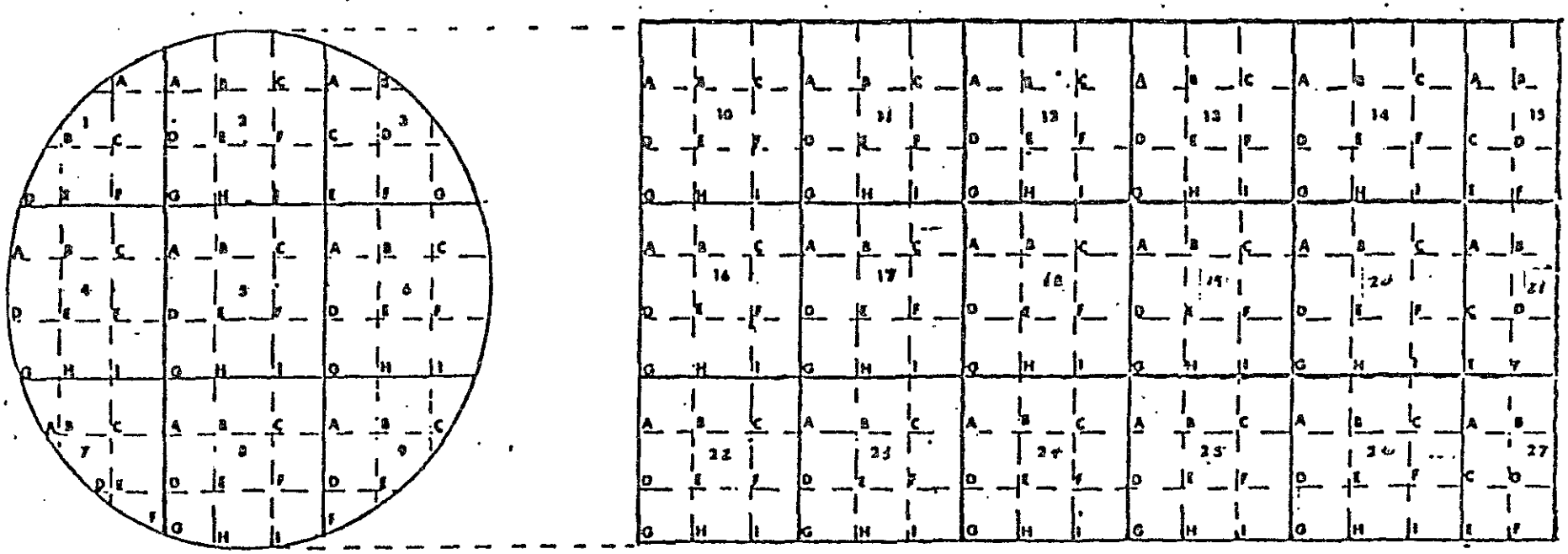

LEFT

BOTTOM

Tank should be inspected at the center point of each 3' quadrant. Quadrants under 3/16" thickness should be further inspected at the center point of each 1' quadrant within the original 3' quadrant. Indicate each test by marking the millage in the appropriate square.

Millage Conversion to inches:

31.25	= 1/32 of an inch	
62.50	= 1/16 of an inch	
187.5	= 3/16 of an inch	
250.0	= 4/16 of an inch	= 1/4
312.50	= 5/16 of an inch	
375.0	= 6/16 of an inch	= 3/8
437.50	= 7/16 of an inch	
500.0	= 8/16 of an inch	= 1/2
562.50	= 9/16 of an inch	
625.0	= 10/16 of an inch	= 5/8

Scale: 1" = 3'

CONVERSION

MILS		.625	.5625	.500	.4375	.375	.3125	.250	.1875	.125	.0625	.0312	LEAK	PENSEAM
IN.		10/16		8/16		6/16		4/16		2/16				
IN.		5/8	9/16	1/2	7/16	3/8	5/16	1/4	3/16	1/8	1/16	1/32		
QUADRANT NO.	A													
	B													
	C													
	D													
	E													
	F													
	G													
	H													
	I													
QUADRANT NO.	A													
	B													
	C													
	D													
	E													
	F													
	G													
	H													
	I													
QUADRANT NO.	A													
	B													
	C													
	D													
	E													
	F													
	G													
	H													
	I													

MILS		.625	.5625	.500	.4375	.375	.3125	.250	.1875	.125	.0625	.0312	LEAK	PENSEAM
IN.		10/16		8/16		6/16		4/16		2/16				
IN.		5/8	9/16	1/2	7/16	3/8	5/16	1/4	3/16	1/8	1/16	1/32		
QUADRANT NO.	A													
	B													
	C													
	D													
	E													
	F													
	G													
	H													
	I													
QUADRANT NO.	A													
	B													
	C													
	D													
	E													
	F													
	G													
	H													
	I													
QUADRANT NO.	A													
	B													
	C													
	D													
	E													
	F													
	G													
	H													
	I													

CONVERSION

LS IN.		.625 10/16	.562 9/16	.500 8/16	.437 7/16	.375 6/16	.312 5/16	.250 4/16	.187 3/16	.125 2/16	.062 1/16	.031 1/32	LEAK	PENS EAM
IN.		5/8	9/16	1/2	7/16	3/8	5/16	1/4	3/16	1/8	1/16	1/32		
QUADRANT NO.	A													
	B													
	C													
	D													
	E													
	F													
	G													
	H													
	I													
QUADRANT NO.	A													
	B													
	C													
	D													
	E													
	F													
	G													
	H													
	I													
QUADRANT NO.	A													
	B													
	C													
	D													
	E													
	F													
	G													
	H													

LS IN.		.625 10/16	.562 9/16	.500 8/16	.437 7/16	.375 6/16	.312 5/16	.250 4/16	.187 3/16	.125 2/16	.062 1/16	.031 1/32	LEAK	LENS EAM.
IN.		5/8	9/16	1/2	7/16	3/8	5/16	1/4	3/16	1/8	1/16	1/32		
QUADRANT NO.	A													
	B													
	C													
	D													
	E													
	F													
	G													
	H													
	I													
QUADRANT NO.	A													
	B													
	C													
	D													
	E													
	F													
	G													
	H													
	I													
QUADRANT NO.	A													
	B													
	C													
	D													
	E													
	F													
	G													
	H													
	I													

ULTRASONIC MEASUREMENT REPORT FORM

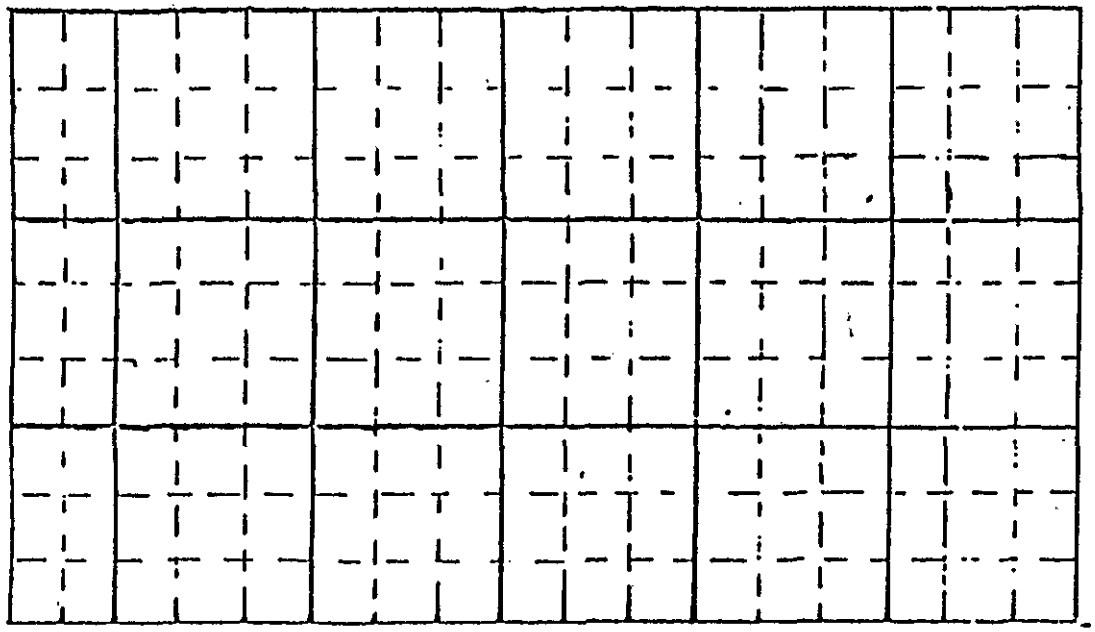

TOP

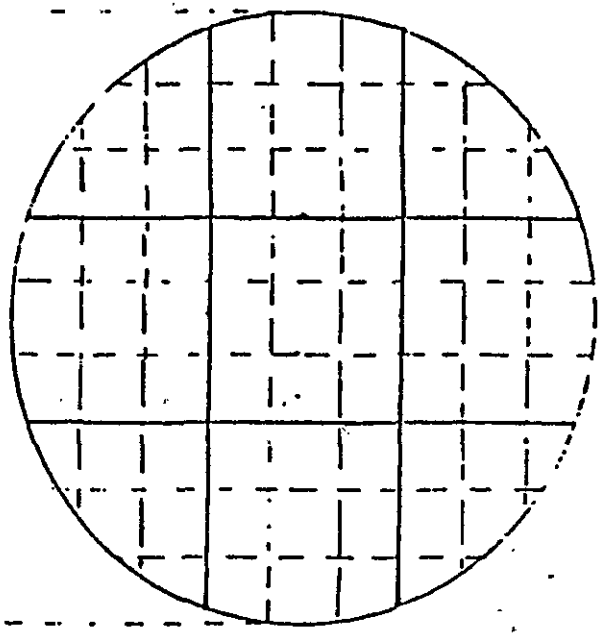

RIGHT

* Scale: 1" = 3'

Tank should be inspected at the center point of each 3' quadrant. Quadrants under 3/16" thickness should be further inspected at the center point of each 1' quadrant wihtin the original 3' quadrant. Indicate each test by marking the millage in the appropriate square.

Millage Conversion to inches:

31.25 = 1/32 of an inch
62.50 = 1/16 of an inch
187.5 = 3/16 of an inch
250.0 = 4/16 of an inch = 1/4
312.50 = 5/16 of an inch
375.0 = 6/16 of an inch = 3/8
437.50 = 7/16 of an inch
500.0 = 8/16 of an inch = 1/2
562.50 = 9/16 of an inch
625.0 = 10/16 of an inch = 5/8

INTERIOR LINING OF STEEL UNDERGROUND STORAGE TANKS

FIGURE 3

INSTALLATION OF TANK COVER PLATE

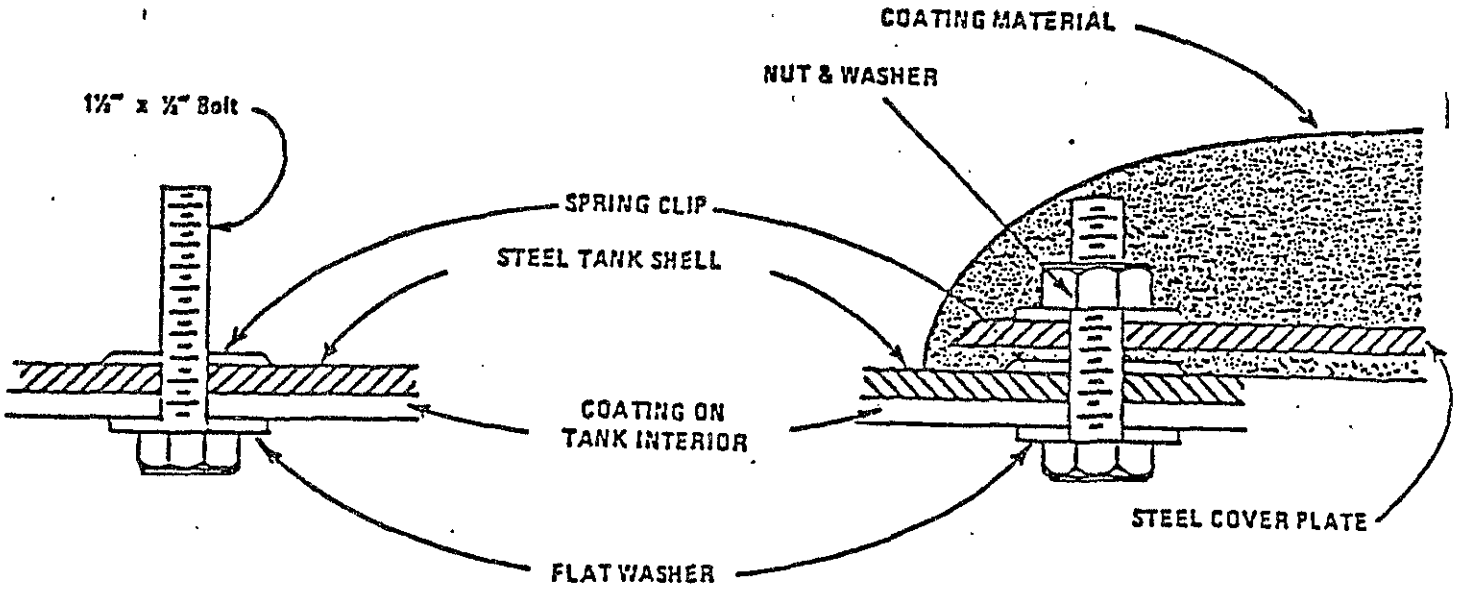

WITH BOLT IN PLACE PRIOR TO COVER INSTALLATION

WITH COVER BOLTED IN PLACE

CROSS SECTION

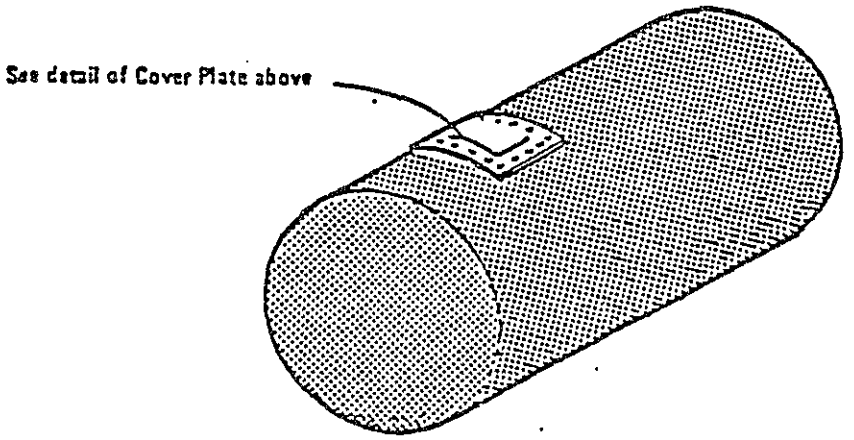

Exhibit B

UNDERWRITERS LABORATORIES INC.
NORTHBROOK, IL · MELVILLE, NY · SANTA CLARA, CA · TAMPA, FL

an independent, not-for-profit organization testing for public safety

333 Pfingsten Road
Northbrook, Illinois 60062

Subjects 58, 1316

April 23, 1984

TO: Manufacturer's of Steel Tanks, Composite Tanks, and Nonmetallic Tanks for Underground Storage of Flammable Liquids and/or Petroleum Products

SUBJECT: Lining of Underground Storage Tanks

UL provides two options for the investigation of tank linings: (1) Listing by Report for the complete lining process including an evaluation of the actual lining materials and (2) Component Recognition of the lining materials only. This Component Recognition would assist any applicators that wish to submit their lining process to UL for Listing by Report, in that it would not be necessary to repeat the evaluation of the lining materials.

Details of these two options are discussed below.

A. Listing by Report - UL's investigation is limited to the materials and application of the lining. The acceptability of the tank intended to be lined and the lining process will be under the jurisdiction of the inspection authority.

   UL's investigation consists of two basic elements: (1) exposure testing of coupons of the lining only and (2) physical testing of a lined tank. The tests involved are outlined in the Appendices A and B.

   Upon satisfactory completion of all the tests and examinations specified, a report is then prepared and sent to UL's Casualty and Fire Councils for comments. Listing is promulgated by means of a Listing Report.

B. Component Recognition - UL's investigation is limited to an evaluation of the coating material's resistance to the corrosive effects of stored flammable liquids as well as the material's resistance to permeation. The test program for Component Recognition is outlined in Appendix A; it does not include the tests outlined in Appendix B.

If you would like to submit drawings for review, please address your request to Mr. S. C. Slowik, Associate Project Engineer at UL's Northbrook office.

UNDERWRITERS LABORATORIES INC.

JOHN J. HAWLEY
Engineering Group Leader
Casualty and Chemical Hazards
Department

REVIEWED BY:

ROBERT G. HARRIS
Executive Staff Engineer
Manager
Casualty and Chemical Hazards
Department

SR:JES

A P P E N D I X A

TEST PROGRAM FOR EVALUATING TANK-LINING SYSTEMS

PHYSICAL TESTS OF LAMINATE:

METHOD

Five by nine inch (127 by 229 mm) lining samples are to be immersed in the solutions specified below and maintained at a temperature of 100°F (38°C). Specimens are also to be exposed in an air-circulating oven maintained at a temperature of 158°F (70°C). After 30, 90, 180 and, if necessary, 270 days, selected samples are to be removed from the solution and tested for flexural strength and Izod impact.

The specimens subjected to the flexural strength test are to be tested in accordance with the Test Method for Tensile Properties of Plastics Using Microtensile Specimens, ASTM D1708-79, using a cross head speed of 0.01 inch/minute (0.25 mm/minute).

The specimens to be subjected to the Izod impact test are to be tested in accordance with the Test Method for Impact Resistance of Plastics and Electrical Insulating Materials, ASTM D256-81.

SOLUTIONS OR IMMERSION

The following solutions are to be used for immersion of the samples:

1. Premium leaded gasoline
2. Regular unleaded gasoline
3. No. 2 fuel oil
4. ASTM Reference Fuel C.
5. Toluene
6. No. 6 fuel oil
7. 100-percent methanol
8. 200-percent ethanol
9. 50-percent ethanol, 50-percent ASTM Reference Fuel C

10. 50-percent ethanol, 50-percent ASTM Reference Fuel C

11. 85-percent Reference Fuel C, 15-percent methanol

12. 85-percent ASTM Reference Fuel C, 15-percent ethanol

13. 70-percent ASTM Reference Fuel C, 30-percent ethanol

14. Distilled water

PERMEANCE - COATING DISSOLUTION EVALUATION:

METHOD

Coupon samples of the lining only are to be bonded to glass dishes containing the immersion solutions. Before the samples are attached to the dishes, the thickness is to be measured in the center of each quadrant and these values are to be recorded for later use. The assemblies are to be weighed on an analytical balance. The assemblies are then to be inverted and placed in a 100°F (38°C) ambient chamber so that the solution will contact the test specimen.

To determine the rate or percent of transmission of the solution through the test specimen, the assemblies are to be reweighed after 30, 90, 180 and, if necessary, 270 days. At the conclusion of the test, the thickness of each sample is to be remeasured and any loss or swelling is to be recorded.

RESULTS

No permeance or dissolution of the liner material is to occur.

BONDING TO SURFACE:

METHOD

Steel coupons coated with the minimum thickness of liner material are to be bonded to glass cups filled with each of the immersion solutions and the assemblies are to be inverted so the solution contacts the surface. Before bonding the coupons to the cup, the hardness of the liner material is to be determined. Following each exposure period, the exposed liner material is to be visually examined and the hardness determined.

RESULTS

There shall not be any softening blistering or uplift of the liner material.

COLD IMPACT:

METHOD

Six by six inch (152 by 152 mm) sheets of the liner are to be conditioned for 16 hours in a cold box maintained at minus 20°F (minus 29°C). Each conditioned specimen, and additional unconditioned specimens, are to be clamped between two steel rings having an inside diameter of 4.25 inch (108 mm) and impacted once by dropping a 1.18 pound (535 g) steel sphere from a height of 6 feet (1.83 m) onto the surface of the specimen.

RESULTS

The samples shall not crack or show rupture of the liner.

A P P E N D I X B

TEST PROGRAM FOR EVALUATING THE STRUCTURAL SUITABILITY OF TANK-LINING SYSTEMS

PHYSICAL TESTS OF TANK:

METHOD

Using a tank selected by the manufacturer and judged by UL to meet the criteria outlined in the manufacturer's instructions, the following test and examination are to be conducted.

Note: The tank selected will become the basis for judging the acceptability of future tanks for the lining process.

1. The tank is to be inspected by a representative of UL's engineering staff and a detailed description of the tank's physical condition recorded.

2. The tank is then to be prepared by the manufacturers personnel and lined in accordance with the lining instructions.

3. A 5-psig (34.5-kPa) leakage and 5.3-inch (135-mm) Hg vacuum test are then to be performed, exactly as they are conducted during an actual lining procedure.

4. The tank is then to be tested for voids and holidays.

5. After the buried tank has been lined, the thank is to be excavated and placed at ground level for visual examination of the exterior.

6. The excavation is to be prepared for anchoring the tank as required.

7. The tank is to be repositioned in the excavation and anchored (tied down) to prevent float-out.

8. The tied-down tank is to be recovered with back fill material to grade and the entire excavation flooded for a 24 hours.

9. At the end of the 24-hour flooded condition, a vacuum of 5.3 inch (135 mm) Hg is to be applied for 1 minute to simulate an additional external pressure equivalent of 6-feet (1.83-m) of water.

10. Unless a metal deflector plate is provided to protect the area under the fittings from a dipstick, an impact test is to be conducted on the interior of the tank. A 2-pound (901-g) steel sphere is to be dropped from a height equal to the tank diameter so as to impact the area under the fitting opening.

RESULTS

As a result of the tests, there shall be no damage to the tank as evidence by cracking, buckling, or deformation. The tank is again to be tested for voids or holidays. In addition, there shall be no cracking of the lining material.

Exhibit C

7/84

San Jose Hazardous Materials Ordinance

GUIDELINES FOR PERMANENT CLOSURE OF

HAZARDOUS MATERIALS STORAGE FACILITIES

SCOPE:

A) Applies to existing hazardous materials storage facilities with intentions to permanently terminate the storage of hazardous materials.

B) Applies to out of service (abandoned) storage facilities which have not complied with closure requirements.

Closure plans should be submitted for approval to the Hazardous Materials Program, City of San Jose, at least 30 days prior to the termination of storage activity. Out-of-service facilities should submit closure plans as soon as possible, and no later than 90 days from the discovery of such facilities.

A closure plan is a statement of proposed actions to be performed by the facility owner (permittee) in order to render the storage facility safe. Actions should consist, at a minimum, of the following:

1. Provide name, address, and phone numbers of contractors retained to carry out any phase of the intended closure.

2. Provide brief description of storage facility and material stored. Include a plot plan of the storage facility to be closed.

3. If the storage facility has underground tank(s), or if there is any suspicion of soil contamination from any above-ground storage facilities, then soil sample(s) from area(s) likely to have the maximal amount of contamination shall be obtained and analyzed for residual hazardous materials, in an appropriate manner, by a laboratory. Information pertaining to the location of samples, sampling methods, test procedures, and test results shall be provided to the City.

4. Remove and properly dispose of, neutralize, or reuse all hazardous materials in an appropriate manner.

5. Remove or decontaminate all storage facilities in order to minimize present and future public health and environmental hazards. Service station underground tanks may be abandoned in place or removed:

   a. Tanks abandoned in place:

      1) All flammable or combustible liquid shall be removed from the tank and from all connecting lines.

2) The suction, inlet, gauge, and vent lines shall be disconnected.

3) The tank shall be filled completely with a concrete slurry capable of filling all voids and hardening to a solid material.

4) The remaining underground piping shall be capped.

5) When the tanks to be removed/abandoned have contained flammable or combustible liquids, a PERMIT must be applied for PRIOR TO REMOVAL/ABANDONING OF TANKS.

b. Tanks removed:

1) All flammable or combustible liquids in the tank and connecting lines shall be removed.

2) The suction, inlet, gauge, and vent lines shall be disconnected. Sections of connecting lines which are not to be used shall be removed. Inlets, outlets, and leaks, if any, shall be capped or plugged.

3) The tank shall be made safe for removal by the introduction of carbon dioxide gas. The addition of dry ice (15 lbs. per 1000 gallon capacity) is recommended to lower the oxygen concentration in the tank.

4) When the tanks to be removed/abandoned have contained flammable or combustible liquids, a PERMIT must be applied for PRIOR TO REMOVAL/ ABANDONING OF TANKS.

Upon satisfactory review and approval of the closure plan, and required permits have been applied for, a hazardous materials storage facility shall carry out the proposed actions. If there is indication of soil contamination, the permittee may be required to render the soil free from the residual hazardous materials through appropriate cleanup procedures.

0083H:3:km

#4-CHS

CITY OF SAN JOSÉ, CALIFORNIA

476 PARK AVENUE
SAN JOSE, CA 95110
(408) 277-4444

SAN JOSE FIRE DEPARTMENT

VINCE CLET
Fire Chief

December 14, 1984

Mr. Edward Anton, Chief
Division of Technical Service
State Water Resource Control Board
P.O. Box 100
Sacramento, CA 95801

Dear Mr. Anton:

Underground Tank Regulations

Further to our comments dated 11/21/84 regarding the monitoring of underground storage of motor fuels, we have assembled some additional information regarding the use of dip-sticks for inventory reconciliation..

We have reexamined the records relating to leaking motor fuel tanks for the past twelve months, and have determined that none of the leaks were detected using the dip-stick tank gauging which was in place. A list of these locations is shown in Table 1.

In an effort to examine the potential utility of dip-stick tank monitoring, the San Jose Hazardous Materials Program has examined the inventory reconciliation records of a retail gasoline station which was known to have lost at least 500 gallons of gasoline in November 1983. In Figure 1, the difference between the inventory (from dispenser records) and dip-stick reading is plotted for each day of one month. A leak would be indicated by a steady downward trend on the graph, whereas a gain (water instrusion) would be shown by a steady rise on the graph. The data for five tank months in Figure 1 is clearly inconclusive, and demonstrates that dip-stick inventory reconciliation is not sufficiently accurate to detect leaks as large as 500 gallons over a one month interval. (Tank E lost 500 gallons).

Please advise if we can provide any further assistance.

Sincerely,

Peter W Jones

Peter W. Jones
Haz Mat Program Manager

cc: John F. Felde

PWJ:bm

Received DTS
DEC 17 1984

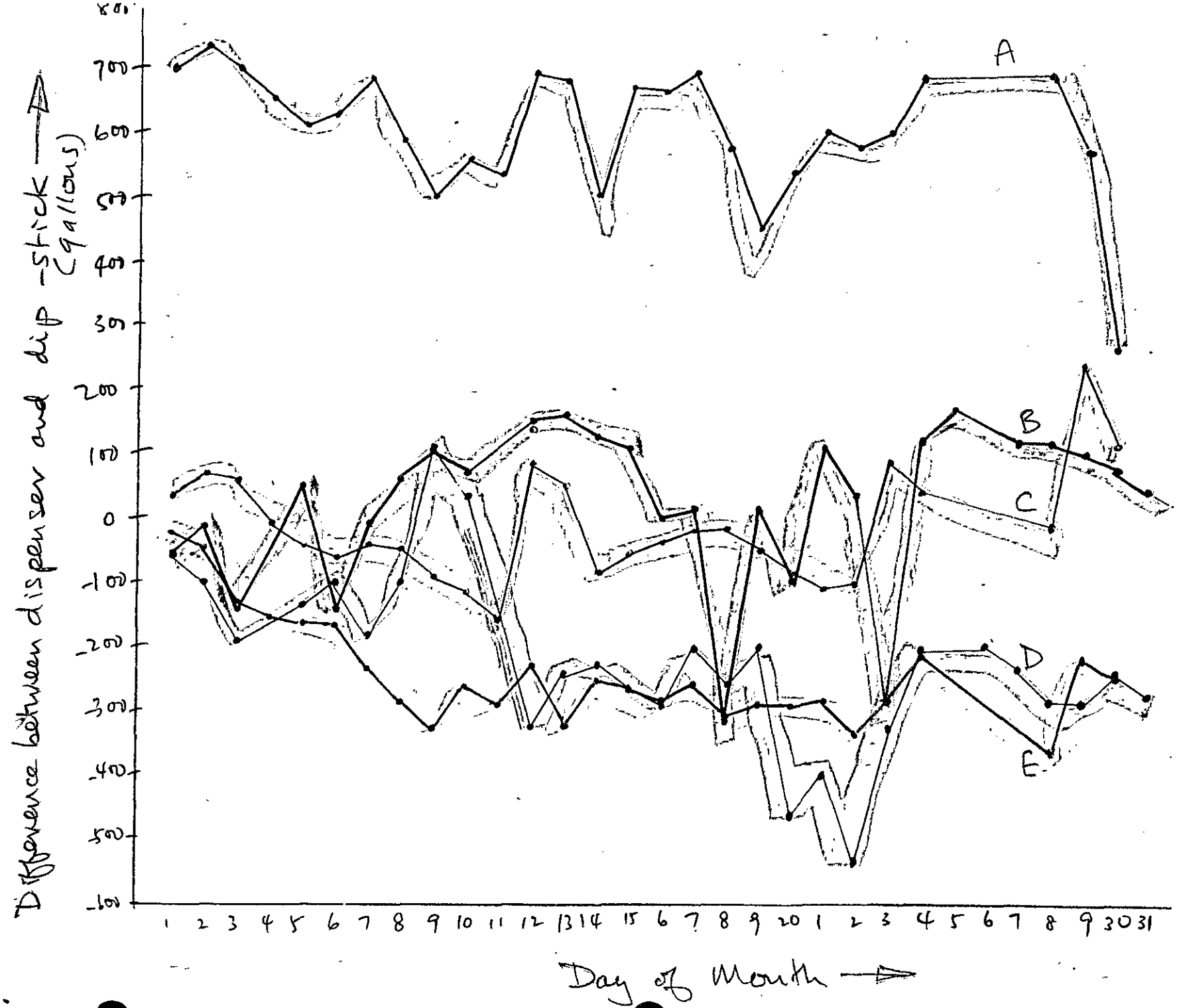
Difference between dispenser and dip stick (gallons)
800
700
600
500
400
300
200
100
0
-100
-200
-300
-400
-500
-600
A
B
C
D
E
1 2 3 4 5 6 7 8 9 10 11 12 13 14 15 6 7 8 9 20 1 2 3 4 5 6 7 8 9 30 31
Day of Month

Table 1

Gasoling leaks in City of San Jose, not detected by dip-stick monitoring.

1111 N. Capitol Ave.	Exxon Co.
270 W. San Carlos	Shell Oil Co.
1645 Tully Rd.	Crown Service Station
1020 Berryessa St.	Chevron
98 N. Autumn St.	SCV Paramedical Services
147 E. Santa Clara St.	Chevron
1648 Tully Rd.	Chevron
2302 Almaden Rd.	Chevron
1100 Story Rd	Shell Oil Co.
1125 Coleman Ave.	FMC Corp
1661 Airport Blvd.	San Jose Airport
401 Saratoga Ave.	ARCO
2701 Story Rd	Boyette Petroleum
2710 Story Rd	Curries Chevron
1604 McKee Rd	ARCO
980 N. 11th St.	Haines & Sons Painting
301 S. Market St.	Mobil Civic Center
4096 Monterey Rd	Exxon
481 Coleman Ave	Pacific Motor Trucking
1661 N E Airport Blvd.	Avis
477 S. Market St.	Rose Murty Tire Co.
950 Old Oakland Rd	Modern Ice. Co.
5350 Monterey Rd	Desert Petroleum
1115 Coleman Ave	FMC
2060 Gigure Ct.	SJ Crane & Rigging
201 San Jose Ave	SJ Rag Company
2910 Steven Creek Blvd	Chevron

SUBCHAPTER 16 #5

FREDERICKS HANSEN Paint Company

September 6, 1984

State Water Resources Control Board
Post Office Box 100
Sacramento, California 95801

Attention: Harold Singer
Division of Technical Services

Dear Mr. Singer,

We are a manufacturer of coatings, primarily trade sales paint, located in the County of San Bernardino, within the boundries of the city of San Bernardino, California. We have reviewed your notice of the October 23, 1984 public hearing on the proposed regulations governing underground storage of hazardous substances, subchapter 16 of chapter 3 title 23 California Administrative Code. Unfortunately, we will be unable to attend this hearing, but we have the following comments to make on the proposed rule.

We have been very interested in the progress of regulations such as this hearing will cover. In our manufacturing area, we have seven underground storage tanks which were installed between 1977 and 1978. These tanks are in good condition, and they have all been registered with the State of California.

Since June 1984, we have been monitoring the tanks for material balance as a technique for determining leaks. The proposed regulation article 4 states that four or more monitoring methods must be used to adequately meet the proposed rule requirements. We are currently using only the inventory control or material balance method.

We have investigated the cost of tank pressure testing and soils monitoring, two of the other seven techniques for monitoring tank integrity. We have had an estimate of $450 per tank for testing, for a total cost to us of $3,150 each time the tanks are tested.

Received DTS
SEP 10 1984

1595 E. San Bernardino Ave. P.O. Box 5638 San Bernardino, CA 92412 (714) 885-6824

Sophistocated tests of this type, i.e. soil testing or tank pressure testing, would be desirable to confirm the presence of a leak which would have been discovered by our monthly inventory control or material balance technique. However, it is our feeling that testing for leaks using techniques other than inventory control on a regular basis is not necessary and would constitute an unusual financial burden for a paint manufacturer which is making every effort to protect the environment in its community.

We thank you for the opportunity to make these comments, and we hope that you will look favorably on our suggestion that only one monitoring technique such as inventory control is necessary to be used for regular surveillance of underground storage tanks.

Yours truly,

FREDERICKS-HANSEN PAINT COMPANY, INC.

PCBremenstuhl

Philip C. Bremenstuhl
Director - Paint Division

PCB/rnm

cc: Earl Smith - Spencer Kellog
Joe King - McCloskey Varnish Company
H. Norman Johnson, Jr. - Fredericks-Hansen Paint Company

SUBCHAPTER 16 #6

VALLEY LEAK DETECTION SERVICE
31848-D Road 138 • Visalia, CA 93291
(209) 734-0225

September 6, 1984

Harold Singer
Division of Technical Services
State Water Resources Control Board
P.O. Box 100
Sacramento, Ca. 95801

Dear Mr. Singer:

This is in response to the invitation to comment on the Notice of Proposed Rulemaking concerning underground fuel storage tanks.

There is less cost and risk to buried tanks operators using the soils monitoring method of leak detection. This, in combination with inventory control, will identify leaking tanks by sampling the vapors in small diameter wells installed in the tank backfill using a mobile flame ionization instrument capable of 1ppm hydrocarbon detection.

This method also has the advantage of not being dependent on permanent leak detection devices which may fail and permit low level leaks to go undetected. The flame ionization unit can be verified before each test. Additionally, this method would detect previous leakage and provide an opportunity for review of the groundwater in the area.

We worry that tank testing, "hydrostatic" or "final test", may become overused. Tank testing is a valuable and positive method of determining leakage; however, it exerts forces on the tank nearly three times normal and may tend to create leaks. Pressure testing of tanks should only be done when actual leakage is suspected.

The installation of vapor wells at existing tank sites can be done for about $500.00 per site. This is a one time cost. The vapor sampling can be done for about $40.00 per site per visit.

It is sincerely hoped that these comments are helpful and please do not hesitate to call if further information is needed.

Received DTS
SEP 10 1984

Very truly yours,

Rex H. Black

Rex H. Black

rb
cc Don Johnson Tulare County Environmental Health

SUBCHAPTER 16 #7

W. B. DISTRIBUTORS

691 Lincoln, Napa, CA. 94558
(707) 224-1554

Clair B. Black

Texaco Wholesaler

September 6, 1984

State Water Resources Control Board
P. O. Box 100
Sacramento, Ca. 95801
AttN: Mr. Harold Singer

Dear Mr. Singer:

Relative to the public hearing on October 23, 1984 concerning adoption of standards and procedures for permits to operate underground storage for hazardous substances, I submit the following:

It is my belief that you are, in effect, "throwing the baby out with the bathwater." I have been engaged as a wholesaler of petroleum products for thirty seven years, and during those years I have only been aware of perhaps a half dozen cases of leaking gasoline tanks. Admittedly, there have been a few cases that have made national headlines, however I do not feel that these cases are justification for the expenditure of the billions of dollars that this measure is going to put on taxpayers, through increased cost of product and increased taxes to implement and enforce these regulations.

I am probably one of the smallest wholesalers associated with Texaco in California, and from my investigation of systems to comply with this proposed statute, the cost would be prohibitive. It would take all of the profit from this business for several years just to install the measures that this proposal requires for the existing underground storage, without even considering the future costs of new installations for the purpose of increasing my business.

The people who are proposing this regulation profess to be concerned for the welfare of people, but this type of legislation will redound to the detriment of the very people it proposes to help.

Sincerely,

Clair B Black

Clair B. Black

CALIFORNIA REGIONAL WATER
SEP 12 1984
QUALITY CONTROL BOARD

SUBCHAPTER 16 #8

NI INDUSTRIES, INC.
5215 SOUTH BOYLE AVENUE - P. O. BOX 58507 VERNON BRANCH - LOS ANGELES, CA 90058 - (213) 588-7111

VERNON DIVISION

September 24, 1984

State Water Resources Control Board
P.O. Box 100
Sacramento, CA 95801

Attn: Harold Singer
Division of Technical Services

RE: Draft regulation on the underground storage of hazardous materials.

Dear Mr. Singer:

AB 1362 which inacted Chapter 6.7 of the Health and Safety Code requires that monitoring systems be installed on all underground tanks that store hazardous substances to detect the unauthorized release of hazardous liquid. This law allows various forms of monitoring systems, visual, vacuum or pressure testing ground water monitoring, etc.

It is my understanding of the law that it's intent is to have a monitoring system that will detect leaks of hazardous materials from underground tanks. There is no reference in the law that requires the owner of underground tanks to test or detect leaks that may have occured in the past.

Section 2640(b) of the draft regulation states that, "The objective of the monitoring program for existing underground storage tanks are; to determine if unathorized releases are occuring or have occured in the past.....".

I believe the intent of AB 1362 is to detect if tanks are leaking and to provide monitoring systems to detect if any leaks occur in the future.

Section 2640(e) states that if visual inspection of tanks can not be implemented the owner shall provide alternate monitoring as specified in section 2642 through 2646.

Section 2642 through 2646 require tank testing, inventory control, soil testing and exploratory boring, Vadose Zone Detection monitoring under certain conditions, and ground water monitoring. The draft regulation requires all of the above when AB 1362 only requires one of the above. Multiple monitoring systems were not required by AB 1362.

Received CTS
SEP 27 1984

Section 2640 E requires the owner not only to visually monitor the tanks daily but also requires soil monitoring. This was clearly not required by AB 1362.

The State Water Resources Control Board has gone beyond their requirement to specify monitoring methods and imposed requirements that were not contained in AB 1362.

Thank you in advance for considering my comments.

Sincerely,

Don L. Hedges

DLH:ao

#93

NI INDUSTRIES, INC.

CORPORATE HEADQUARTERS • ONE GOLDEN SHORE • P.O. BOX 2960 • LONG BEACH, CALIFORNIA 90801-2960
TELEPHONE (213) 435-6676 • TELECOPIER (213) 435-7058

September 25, 1984

State Water Resources Control Board
P.O. Box 100
Sacramento, CA 95801

Attn: Harold Singer
Division of Technical Services

Re: Draft Regulation on the Underground Storage of Hazardous Materials.

Dear Mr. Singer:

AB 1362 which inacted Chapter 6.7 of the Health and Safety Code requires that monitoring systems be installed on all underground tanks that store hazardous substances to detect the unauthorized release of hazardous liquid. This law allows various forms of monitoring systems, visual, vacuum or pressure testing ground water monitoring, etc.

It is my understanding of the law that it's intent is to have a monitoring system that will detect leaks of hazardous materials from underground tanks. There is no reference in the law that requires the owner of underground tanks to test or detect leaks that may have occurred in the past.

Section 2640(b) of the draft regulation states that, "The objectives of the monitoring program for existing underground storage tanks are; to determine if unathorized releases are occurring or have occurred in the past.....".

I believe the intent of AB 1362 is to detect if tanks are leaking and to provide monitoring systems to detect if any leaks occur in the future.

2640(b)

Section 2640(e) states that if visual inspection of tanks cannot be implemented the owner shall provide alternate monitoring as specified in Section 2642 through 2646.

Received DTS
SEP 28 1984

Section 2642 through 2646 require tank testing, inventory control, soil testing and exploratory boring, Vadose Zone Detection monitoring under certain conditions, and gorund water monitoring. The draft regulation requires all of the above when AB 1362 only requires one of the above. Multiple monitoring systems were not required by AB 1362.

Section 2640-E requires the owner not only to visually monitor the tanks daily but also requires soil monitoring. This was clearly not required by AB 1362.

The State Water Resources Control Board has gone beyond their requirement to specify monitoring methods and imposed requirements that were not contained in AB 1362.

Thank you in advance for considering my comments.

Sincerely,

David L. Hirsch
Vice President & Senior Counsel

DLH.bv

SUBCHAPTER 16 #9

California Conference of Directors of Environmental Health

Reply to: Donald W. Koepp, Director
Environmental Health Dept.
800 S. Victoria Ave.
Ventura CA 93009

September 27, 1984

Mr. Harold Singer
State Water Resources Control Board
P.O. Box 100
Sacramento CA 95801

Dear Mr. Singer:

We enjoyed having the opportunity to discuss your draft underground hazardous materials storage tank regulations during your local government workshop on September 12, 1984. We hope you have more workshops in the Los Angeles area as it is difficult for us to travel to Sacramento for these meetings.

We have reviewed your draft regulations and have concerns about three areas addressed by your proposed regulations: Existing underground storage tank monitoring criteria, permit requirements, and additional standards request procedures.

Our primary concern is the proposed monitoring requirement for existing tanks outlined in Article 4. Under the proposed regulations, a 100 gallon underground waste oil tank in the desert, miles away from a usable water supply, is required to have the same monitoring system as a 100,000 gallon underground pesticide tank; specifically, groundwater monitoring wells, vadose zone detection, inventory control and pressure testing. We feel the tank owners and local agencies should have the option to require a less stringent or more stringent leak detection system based on an evaluation of the potential for leaks to adversely impact water resources and human health. The evaluation should be similar to the site ranking model used by the EPA to evaluate risks at hazardous waste sites. It is suggested that the evaluation address container properties, stored chemical properties, pathways of contamination, and potential effects on receptors.

Our secondly concern is the proposed permitting guidelines addressed in Article 10. Ventura County has started to permit underground hazardous material tanks. We will be issuing interim permits to facilities and identifying a compliance schedule for each facility to install the appropriate leak detection system. Under your proposed regulations, a facility could not be issued a permit to operate until after the leak detection system is installed, making it almost impossible to implement our tank program.

Our third concern is the proposed fee of $11,500 that we must pay if we feel that additional standards under this law are needed. This exorbitant fee would effectively preclude any local agency from promulgating any new standards, even though industry and all government agencies may concur the standard is needed. Also, one agency would end up paying the expense for a standard that all agencies could use. We strongly urge this fee be deleted.

During your workshop of September 12th, many comments were made by various agencies requesting clarification of many sections of the draft regulations. We concur with these comments and request that an additional review and comment period be provided on the draft regulations after these comments are addressed.

If you need clarification of our comments, please contact Mr. Jeffery Heath of my staff at (805) 654-5040.

DONALD W. KOEPP, CHAIRMAN
HAZARDOUS WASTE COMMITTEE

DWK/erf

cc: CCDEH President, Martin Winston
Mark Kostielney, San Mateo County
Jeff Heath

#9-B HS

California Conference of Directors of Environmental Health

Reply to: Donald W. Koepp, Director
Environmental Health Dept.
800 S. Victoria Avenue
Ventura CA 93009

December 10, 1984

Mr. Ed Anton
State Water Quality Control Board
901 P Street
Sacramento CA 95814

Dear Mr. Anton:

We have reviewed the latest draft of your regulations implementing the underground hazardous materials storage tank law.

The regulations provide clear performance standards for new and existing tank installations. We especially support the eight monitoring alternatives for existing tanks listed in table 4.1 of the regulations. It provides clear guidance to industry and enforcing agencies as to acceptable leak detection systems while allowing for the selection of the best alternative suited for each tank facility.

Many counties are anxiously awaiting the adoption of these regulations so they may fully initiate their local programs to protect precious groundwater resources.

We strongly support the efforts of your Board to develop fair regulations and urge you to immediately adopt these regulations.

Yours very truly,

Donald W. Koepp

DONALD W. KOEPP, CHAIRMAN
REGION IV, CCDEH

DWK/erf

cc: Harold Singer
Jeff Heath

Received DIS
DEC 17 1984

#10A

THE MARLEY PUMP COMPANY

MARLEY
A MARLEY COMPANY

June 6, 1984

Mr. Edward C. Anton
Chief, Div. of Technical Services
State of California
Water Resources Control Board
Bonderson Building
901 "P" Street, P O Box 100
Sacramento, CA 95801

Dear Mr. Anton:

It is our understanding that your division is currently working on a draft of regulations being developed to implement an underground tank regulatory program which was established by AB 1362 (Sher).

We have a great deal of interest in this program and request that we be included in any future communications on the subject, if this is possible.

The Marley Pump Company is the manufacturer of a product known as the Red Jacket Leak Detector which is widely used to detect line leaks in underground fuel storage systems of motor fuel service stations. This product is a mature product originally developed and field tested in 1963 and put into production in 1965. The product has been used successfully by every major oil company in the country as well as by municipalities and other large fleet operations.

This product is an automatic, continuously operating pressure loss detector that, when a leak is present, restricts the flow in the line to an average rate of 1.4 gallons per minute. The Red Jacket Leak Detector gives a positive test of the lines each time the pressure drops below a minimum of one psi in the line; however, if the loss of pressure is not due to an actual leak, the leak detector opens and allows unrestricted delivery of the product. If the loss of pressure is due to a leak in the system, the leak detector provides a positive indication by restricting the flow rate at which product can be dispensed.

The draft of the proposed regulations which we reviewed states, in part, on Page 3.7 and other places:

"Pressurized piping systems that include an automatic, continuously operating pressure loss detector and flow restriction device are exempt from the secondary containment requirements of the article. This detector shall be connected to a visual or audible alarm system."

5800 Foxridge Drive • Mission, Kansas 66202 • 913/722-1485

It is the final sentence of the above statement to which we take exception. The normal dispensing flow rate at service stations is around 8 gpm, with a range of about 4 to 12 gpm. Since the Red Jacket Leak Detector restricts flow to an average rate of 1.4 gpm when a leak develops within the system, it is immediately obvious through the greatly reduced dispensing flow rate that a leak is present.

Under normal conditions, an automobile can be refueled in less than two minutes but when a leak is present, the time required is over ten minutes. There is such an obvious time difference that it is immediately known. In many stations there are multiple dispensers connected to the same submersible pump and, in these cases, the total flow per dispenser is reduced in proportion to the number of units operating at the same time, which lengthens the time considerably to fill a tank.

Through the years, we have experimented with many different approaches to leak detection with many field tests using visual and audible alarms. Since thermal contraction is always a factor when dealing with gasolines, the system pressure goes to zero very frequently even in very temperate climates. Of course, when the system pressure drops to some low value, the alarm will be activated - whatever that particular alarm system design calls for. Our experience has shown that this occurs often, particularly during certain times of the year. Systems that rely on this approach generally will be deactivated by the station personnel regardless of the consequences of their action.

It is a far more positive approach to provide such an inconvenience that someone will say something about it and, before normal operations can resume, the problem must be resolved. It is far too easy to deactivate an audible alarm or to remove a light bulb and then, for all appearances, the problem has gone away.

It is not necessary to have an audible or visual alarm when a Red Jacket Leak Detector is used and we request that the language be modified to state this. We believe that adding a visual or audible alarm will actually be counter-productive to the aims of the program. We ask that further consideration be given this matter.

Thank you for your consideration and if we may assist you in any manner, please do not hesitate to contact us.

Sincerely,

C.C. Franklin

C. C. Franklin
Vice President
Sales & Marketing

CCF:bb

SUBCHAPTER 16 ~~#7B~~ #10-B

THE MARLEY PUMP COMPANY

MARLEY
A MARLEY COMPANY

September 28, 1984

Mr. Harold Singer
Div. of Technical Services
State Water Resources Control Board
P O Box 100
Sacramento, CA 95801

Dear Mr. Singer:

With regard to the proposed adoption of regulations governing underground storage of hazardous systems, we would like to make comments for your consideration.

On June 6, 1984, a letter from our company was directed to Mr. Edward C. Anton, Chief, Div. of Technical Services, which spelled out the function of the Red Jacket leak detector and explained the operating principles. In that letter, we suggested that the proposed regulations be modified to exempt the Red Jacket leak detector from the requirement that the leak detector be connected to a visual or audible alarm system. I have attached a copy of the letter for your reference.

The next draft of the proposed regulations, Art. 3, Sec. 2633(f), contained the statement, " . . . This detector shall be connected to a visual or audible alarm system unless it provides at least a 50% reduction from normal flow rates". We noted, however, that in Art. 4, Sec. 2642(h), the language was not changed but read exactly as in the original draft. I am sure the intention of this proposed regulation is to be consistent between new tank construction, which is covered in Article 3, and existing underground storage tanks, which are covered in Article 4, particularly with regard to the leak detection devices installed in underground tanks.

It is our suggestion, then, that Art. 4, Sec. 2642(h) be modified to read as follows: "All pressurized portions of an underground storage tank shall be monitored utilizing an on-line pressure loss detector and flow reduction device. This detector shall be connected to a visual or audible alarm system unless it provides at least a 50% reduction from normal flow rate."

Received DTS
OCT 2 1984

5800 Foxridge Drive • Mission, Kansas 66202 • 913/722-1485

The change will provide complete consistency between Article 3 and Article 4, and we ask your consideration in making this change.

Sincerely,

C. C. Franklin

C. C. Franklin
Vice President
Sales & Marketing

CCF:bb

enc.

Original Comments 11-20

SUBCHAPTER 11 & 5
#11

3467 Kurtz Street
San Diego, California 92110
(619) 224-2911

Woodward-Clyde Consultants

October 1, 1984
Reference No. 540712

California Regional Water Quality Control Board
1111 Jackson Street, Room 6040
Oakland, CA 94607

Attention Mr. Harold J. Singer

Dear Harold:

At the risk of oversimplifying the Draft Regulations, I've taken the liberty of developing a flow chart to depict the compliance process for the owner of an existing underground tank. Please review and comment on this - once you've had a chance to look at it and to give us your suggestions, we'd be happy to forward on proof copies for your use.

Very truly yours,

Jim Hartley

James D. Hartley
Waste Management Specialist

JDH/dh

Attachment

CALIFORNIA REGIONAL WATER
OCT 04 1984
QUALITY CONTROL BOARD

SHER BILL COMPLIANCE FLOW DIAGRAM – EXISTING UNDERGROUND TANKS

BASED ON THE DRAFT REGULATIONS FOR UNDERGROUND TANK STORAGE OF HAZARDOUS SUBSTANCES – AUGUST 23, 1984

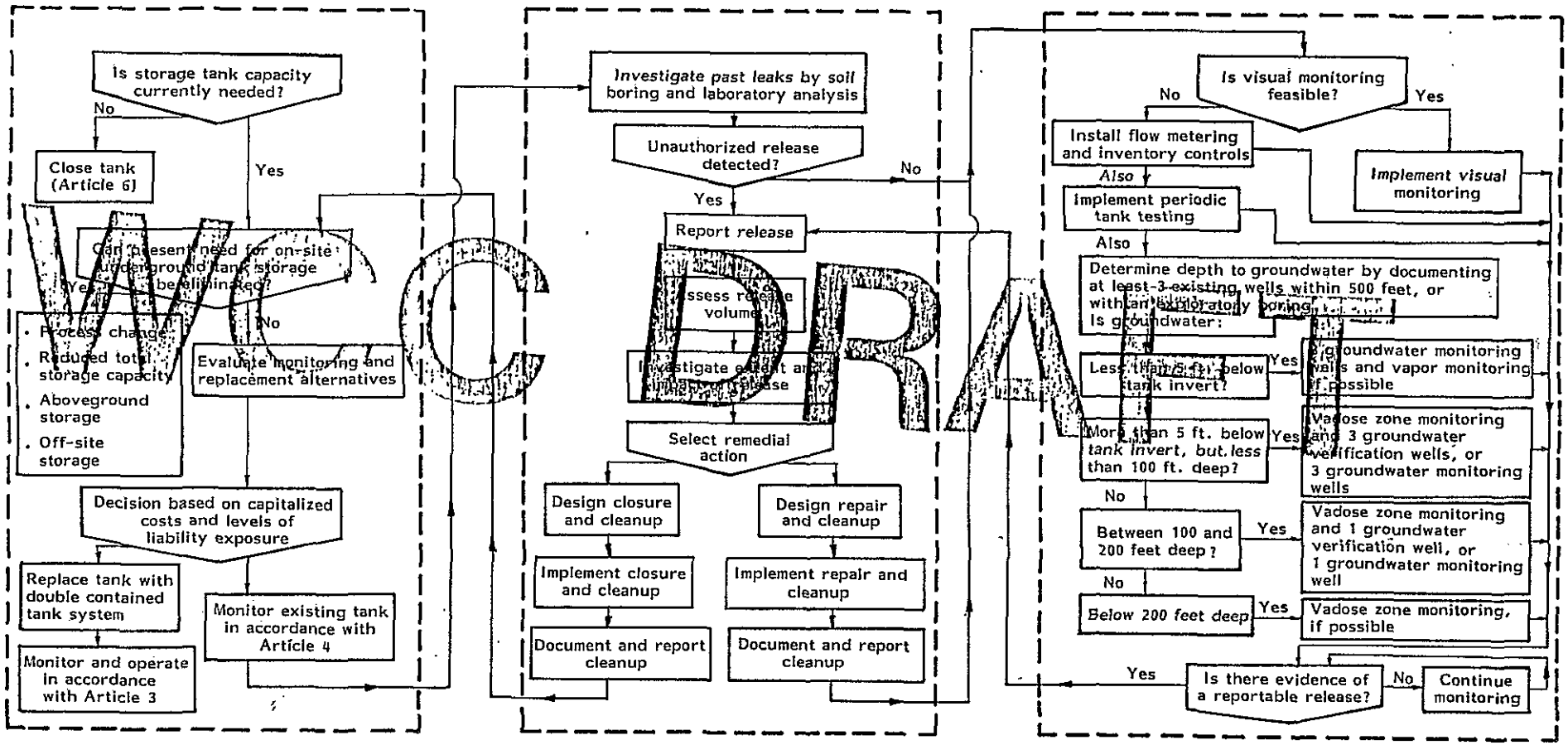

WORK DRAFT

Woodward-Clyde Consultants

#11.b. DH

One Walnut Creek Center
100 Pringle Avenue
Walnut Creek, CA 94596
415-945-3000

Woodward-Clyde Consultants

May 22, 1985

State Water Resources Control Board
Paul R. Bonderson Building
901 P Street
P.O. Box 100
Sacramento, CA 95801

Attention: David Holtry

Dear Mr. Holtry:

I would like to thank you for the opportunity to comment on the proposed amendments to the Underground Tank Regulations. After careful review of said documents, only two specific comments are made. The first comment has to do with Section 2621, and in particular the additional definitions. Perhaps the abbreviations for each organization, such as American National Standards Institute (ANSI) should be included as shown in Appendix I, Table B. This is purely for completeness. The second and more important comment has to do with the deletion of "or less" in Section 2643 (b) and (d). It seems like the deletion of this element would allow leaks of magnitude less than 0.05 gallons per hour to be acceptable. If a constant leak rate of less than 0.05 gallons per hour is permissible, then discharges of up to 435 gallons per year would be deemed acceptable. I think that the element "or less" should remain because leaks of less than 0.05 gallons per hour over a number of years would result in large volumes of discharged material. If another monitoring system incorporated in the dual containment system would address this potential problem, then "or less" should be omitted.

Sincerely,

WOODWARD-CLYDE CONSULTANTS

David W. Parson

David W. Parson
Project Scientist

DWP/sst

Received at
MAY 30 1985

SUBCHAPTER 16
#12

KAISER
SAND & GRAVEL COMPANY
A Subsidiary of Koppers Company, Inc.

POST OFFICE BOX 580, PLEASANTON, CALIFORNIA 94566 • 415/846-8800

October 1, 1984

Harold Singer
State Water Resources
Control Board
P. O. Box 100
Sacramento, Ca 95801

Dear Harold:

Attached are my comments on the proposed regulations governing Underground Storage of Hazardous Substances. I understand these are to be Codified in Subchapter 16 of Chapter 3, Title 23, of the California Administrative Code.

Thank you for your consideration.

Very truly yours,

KAISER SAND & GRAVEL COMPANY

Lawrence W Appleton

Lawrence W. Appleton
Manager of Engineering

LWA:mb

Enclosure

COMMENTS ON DRAFT REGULATIONS

UNDERGROUND TANK STORAGE OF HAZARDOUS SUBSTANCES

Article I

2611 Exemptions

The law and regulations are "intended to protect waters of the State from discharges of hazardous substances from underground tanks." The hazardous substances are named and tanks defined. There should be no exemptions at all. To exempt tanks storing a substance for one special interest group and include the same substance for other special interest groups is purely political and not in conformance with the intent of the law. A political regulation gets very little respect from those being regulated.

Article 3

2631 (c)

The specifications for the materials for secondary containment are not defined at all. As written, the specification is not for the material itself but for the function of the material. Neither the user nor the enforcement agency will have any way to verify that the materials used are proper and adequate. The drafters of the regulations should do enough research to at least offer some guidelines for acceptable materials.

2631

No specifications or guidelines are offered as to materials or methods used for primary container construction. At the very least, references could be made to manufactures associations specifications, Underwriters Laboratories, American Welding Society, or any applicable standards.

2633 (b)

By being specific in materials allowable, this section eliminates asphalt coated and wrapped steel tanks. If this form of protection is acceptable, it should be so stated. Double walled tanks should be listed as being acceptable for Motor Vehicle Tanks in the same manner as done in 2631 (h).

2633 (e)

This does not appear to be a construction standard. It also seems to be excessively complicated and stringent. If 2633 (d) applies and is adhered to as required, then this paragraph should be deleted and paragraph 2632 (b) substituted in its place.

2633 (f)

Suction lines should be excluded from secondary containment requirements. If a suction line leaks, no fuel will flow. Vent lines on gravity filled tanks, ie. underground tanks, should also be excluded from secondary containment requirements as it is totally unnecessary.

2634 (a)

These monitoring requirements should be reduced here or included as requirements in 2632. Monitoring requirements for motor fuels should be less stringent than for extremely hazardous substances such as acids.

2634 (a) (3)

Double walled tanks should be stated as being exempt from this test. The wording should also be changed to read "hydrostatic or equivalant acceptable testing . . . . ."

2634 (b)

For no apparent reason, this paragraph is much more elaborate and definitive than paragraph 2632 (e). The two should be exactly the same.

2634 (d)

This paragraph does not belong in this section at all. It does not give monitoring standards, instead instructions on response procedures to errors. Further, if the secondary containment and the pressurized piping is being monitored as described, all of 2634 (e) should not be necessary. For non commercial tanks (ie. self use) dispenser meters, if any, are rarely calibrated or sealed. This, of course, leads to inventory inaccuracies--which should not cause the panic reaction procedures described.

2634 (f)

Double walled tanks should be stated as being exempt from this requirement.

2635 (b) (1)

Other materials than 0.25 inch thick steel should be allowed for the striker plate.

2635 (b) (2)

A list of required tests and standards of testing desired should be included here to guide the local agency and purchaser.

2635 (b) (3)

Is the intent here to pressure test the tank? If so, at what pressure and for how long? If the intent is to pressure test the pressure piping, it should be so stated along with pressure and time requirements.

2635 (b) (4)

The minimum thickness of 7 gauge does not appear to be adequate.

2635 (b)

If allowed, specifications should be included for asphalt coating and wrapping of steel tanks.

2635 (h)

The implication of the last paragraph is that the area has a corrosion history and that a registered corrosion engineer will be hired. It certainly should not be necessary for both to apply and in general, neither should be required.

2635 (h) (1)

What is proper maintenance of a Cathodic system with sacrificial anodes? What are the monitoring procedures for Cathodic systems?

Article 4

2643 (c)

For non commercial tanks or those for self use, daily water measurements are excessive, retail meters approved and sealed by the County Weights and Measures Department do not exist, and generally the wholesale delivery trucks do not have meters on gravity delivery. Therefore, this whole paragraph has no place for self use tanks.

2643 (d) (3)

What is appropriate training?

2643 (e)

Most gravity delivery trucks do not have meters, but deliver on a weight basis for a whole tank load. In those cases, this paragraph is invalid.

2644 (a)

A cluster of tanks in the same excavation should only require on evaluation. A test at a facility should be acceptable, not one boring per tank.

2644 (b) (2)

Specifically what kind of soil conditions are being addressed here?

2644 (c)

There is no reason to specify 50 feet since this is only a theoretical calculation based on an assumed angle of drilling. As written, the method of obtaining a soil sample directly under the invert is restricted to only one very expensive method with limited capabilities in specific soils. If the water table is known to be less than 50 feet down, this method becomes inoperative as written.

2644 (d)

Again the 50 feet appears with no reason for that depth. Soil conditions are not considered nor is water level or aquifer location. What is the reason for 50 feet?

2644 (e) (2)

Since there apparently are approved EPA methods, indicate what these methods are by test number or method number or at least a reference to locate the correct method.

2644 (e) (3) (B) (i)

Tanks that have been in the ground for many years will have contaminated soils around them from accumulated spills. This contamination should not be assumed to have originated from the storage tank.

2644 (e) (3) (B)

Allowable limits of soil contamination must be given for guidelines. A contamination of 0 is totally impossible and of no benefit. If allowable limits for motor vehicle fuels are 10 ppm or 300 ppm, they should be stated and set in a realistic manner. Other substances should also have a limit established.

2645 (b) (3)

Who determines and how is it determined whether or not the substance being stored is susceptible to vadose zone monitoring?

2646 (d)

Vapor monitoring should not be used under ground water conditions such as this.

2646 (f)

If inventory monitoring, vadose zone monitoring, and tank testing are all required, monitoring the ground water weekly seems very excessive. Section 2648 does not give sampling and analysis procedures as stated. What are the procedures and reporting requirements? What are the allowable limits?

2647 (d)

This is a totally unreasonable requirement. In many areas, groundwater levels are monitored extensively and local agencies can tell you an approximate depth. An approximation is adequate since the depths of 100 feet and 200 feet are arbitrary in any event. The probability of 3 existing wells within 500 feet of a tank is very low and 500 feet is an arbritrary number anyway. Why not change 500 feet to 1500 feet?

2647 (g)

What EPA methods?

2648 (j)

What is proper development?

Article 5

2651 (a) (3)

What is the definition of "cleaned up"?

2651

What is the procedure for double walled tanks?

2652 (b)

Requiring reporting within 24 hours after the release "should have been detected" is absolutely ludicrous and the reference should be deleted.

Article 7

2670 (b)

What is the minimum period for temporary closure? Many tanks are used on a seasonal basis only.

2670 (d)

If nothing is stored in the tank, no leaks ever existed, and the period between cessation of storage and completion of closure is lengthy, this monitoring requirement (daily) is of no merit. Inventory, as required, makes no sense at all.

2670 (f)

"At least 45 days" should be deleted. Cessation of storage may be for a variety of reasons, many of which would not allow 45 days notice.

2671 (c)

Daily inventory monitoring should not be required at all. What frequency is being considered?

2671 (d)

If this paragraph is complied with, paragraph 2671 (c) should be deleted in its entirety.

2672 (b) (2)

What is an acceptable method of purging?

2672 (b) (5) (C)

What are the appropriate warnings to be applied to the tank?

2672 (c)

Why is piping classified as a hazardous waste if used for motor fuel? If the piping is under concrete slabs, empty of all contents, capped, and the tank filled with inert material after being purged, why must it be removed at all? If a tank is being closed in place, and the tank is part of a group of tanks, the piping may be in a trench common to several tanks. To attempt to remove the piping from the tank being closed can not only be hazardous, it can also damage other piping.

2672 (d)

If in closing a tank, soil, samples indicate contamination from spills and not from a leaking container, can the tank be closed by filling with inert material? What are the allowable limits on soil contamination?

2681

Monitoring devices are in their infancy of development. Some substances have no effective monitoring devices. The regulations do not specify types of devices nor do they certify them. Must a categorical variance be applied for for any new technological development? This whole area should be left up to the local agency.

2682

Every site is site-specific in that it has its own unique characteristics. This, again, should be a local issue. The regulations are wrong in attempting to apply the same standards to every area of the state.

2691

The implication is that the state has specified all design and construction standards in existence and if a local agency finds one the state missed, or a UBC changes or UL standards are modified, the local agency must comply with this section. The fact is that the regulations are not specific, do not itemize design and construction standards, and furnish no basis to know if a standard is additional or not. This entire section should be deleted.

2711

Throughout the regulations and here again, the owner of the tank is required to perform all monitoring, reporting, and permit application. This should be changed, in all cases, to owner/operator. In many long term leases of a facility, the owner has nothing to do with the operation of the tanks. Further, many of these leases are written specifically giving the Leasee responsibility for compliance with all present and future environmental regulations. If the intent is to have the operator do the monitoring, testing, and reporting, then those paragraphs stating that these are the owners responsibility should be changed to be the operators responsibility.

#12-6 RECEIVED ugt

JAN 17 1985

DIVISION OF WATER QUALITY

KAISER
SAND & GRAVEL COMPANY
A Subsidiary of Koppers Company, Inc.

POST OFFICE BOX 580, PLEASANTON, CALIFORNIA 94566 • 415/846-8800

January 15, 1985

State Water Resources Control Board
Division of Water Quality
P. O. Box 100
Sacramento, Ca 95801-0100

Attached are comments on Draft Underground Tank Regulations dated December 28, 1984.

Very truly yours,

KAISER SAND & GRAVEL COMPANY

Lawrence W Appleton

Lawrence W. Appleton
Manager of Engineering

LWA:mb

attachment

Received DTS
JAN 17 1985

DRAFT UNDERGROUND TANK REGULATIONS COMMENTS

1. ₱ 2632 (d) (2) (A) The ending indicates words have been omitted . . . . . and an equipment the equipment located on site, makes no sense at all.

2. ₱ 2633 (c) A text deletion has occurred at the end. . . . . constructed of materials other to the requirements of Sections 2631 and 2632 of this article is nonsense.

3. ₱ 2633 (g) In this draft, the reference to a leak detector has been deleted and instead a reference is made to the Health and Safety Code. Why?

4. ₱ 2634 (a) In this draft, all procedures have been deleted and instead a reference is made to the Health and Safety Code. Since none of us have been reviewing the Code for commenting, how are we to respond?

5. ₱ 2635 (b) (4) As written, this paragraph requires a cathodic protection system for all steel tanks no matter what the coating is. In ₱ 2633 (b) steel clad with glass fibre reinforced plastic does not require cathodic protection. Most fuel tanks being installed right now are double walled steel with glass fibre reinforced plastic. These should be acceptable under the regulations without cathodic protection.

6. ₱ 2641 (c) (1) To offer monthly tank testing as a monitoring alternative is totally ludicrous and unrealistic. The current cost of testing is between $500 and $600. This means a minimum of $6000 per year/tank for testing. Not only is the procedure overkill, nobody can afford it. To be a semi-reasonable alternative, the testing should only be required quarterly.

7. ₱ 2644 (b) Daily meter readings are required for tank input and withdrawal. Most deliveries of fuel are by tanker truck with gravity discharge and no metering. That is assuming the customer takes the whole truck load. There are hundreds of underground drain oil tanks that are not metered in or out and it is not feasible to do so.

8. ₱ 2644 (f) (2) The operator is to review the inventory record within 2 hours. Within 2 hours from when?

9. ₱ 2644 (f) (3) What is a "qualified" person to review inventory records?

10. ₱ 2650 (c) It is not possible to report a release with 24 hours after the release "<u>should have been</u>" detected. "Should have been" should be deleted.

11. ₱ 2652 (b) Again, "should have been detected" should be deleted.

12. ₱ 2670 (e) It appears that it is required to continue to monitor empty tanks for up to 2 years. Why?

13. <u>Article 8</u> This whole section requires such a high cost and lengthy procedures that inovation and progress in better techniques will probably cease. All the fees and procedures are being required even though the State does not have adequate staff or qualified personnel to administer the requirements.

Subchapter 16
#13
HS

BLUE DIAMOND MATERIALS
3000 EAST SOUTH STREET / P.O. BOX 5399 / LONG BEACH, CALIFORNIA 90805 / (213) 979-1873
A DIVISION OF SULLY-MILLER CONTRACTING CO.
A SUBSIDIARY OF KOPPERS CO., INC.

September 26, 1984

State Water Resources Control Board
P. O. Box 100
Sacramento, CA 95801

RE: Draft Subchapter 16 Regulations

Gentlemen:

Enclosed are comments on the draft Subchapter 16 regulations. As you obviously recognize, the largest number of tanks affected hold gasoline and diesel fuel. Many of these tanks are controlled by relatively unsophisticated people. The complexity of these regulations will make it difficult for the local agency, which probably has limited personnel, to effectively administer them, and for the owners or operators to understand them. It would seem helpful if they could be greatly simplified - particularly the monitoring regulations.

The fiscal impact statement estimates a very large cost, which must ultimately be paid by the public through higher prices or reduced services. There must be an evaluation that all of this cost really produces an identifiable improvement in safety of the water supply. I think some of the costs are really to answer an emotional concern for "pure water" and do not provide increased safety.

Very truly yours,

R. R. Munro

R. R. Munro
Manager of Special Services

RRM/gm

Enc.

Received DCS
OCT 17 1984

BLUE DIAMOND MATERIALS
3000 EAST SOUTH STREET / P.O. BOX 5399 / LONG BEACH, CALIFORNIA 90805 / (213) 979-1873
A DIVISION OF SULLY-MILLER CONTRACTING CO.
A SUBSIDIARY OF KOPPERS CO., INC.

CHAPTER 3
SUBCHAPTER 16
REGULATIONS FOR STORAGE OF HAZARDOUS MATERIALS

Article 3

The alternate construction and monitoring regulations for new motor fuel tanks (Sec 2633 and Sec 2634) seem much more complex than the general tank construction and monitoring regulations (Sec 2631 and Sec 2632). This complexity will make enforcement very difficult by the local agencies, and will make the owners uncertain about what to do and what has been accomplished.

Article 4 - Existing tank monitoring

In general, these monitoring regulations are very redundant. The operator must establish that there is no leakage from the tank - then that there has been no release into the vadose zone (even though the tank doesn't leak) - then that there has been no contamination of groundwater (even though the tank doesn't leak and there has been no release to the vadose zone). The rationale is that the tests are not perfect. Since it is the test itself that is uncertain, the combination of the three tests may not give any greater assurance than a single test.

The estimated cost, based upon the Fiscal Impact Statement, is as much as $12,900 per tank and the annual cost as much as $2,900 per tank for this redundancy. Does this expense really buy any greater assurance of ground water protection? I think the answer is clear that any additional assurance is minimal, at best.

The fact that even with the very substantial number of underground tanks in use, there have been relatively few examples of groundwater contamination shows that the vast majority of these installations have operated with reasonable security. The "overkill" of the redundant testing seems to be somewhat of an emotional response to a perceived massive threat to public health.

Testing to assure against leaking - Yes! Redundancy to satisfy emotional reactions - NO!

Section 2641(b)(4). Since this section exempts tanks from the visual monitoring requirement - apparently for a portion of the time - it would apparently require the institution of other, more expensive, monitoring for the balance of the time. Many facilities are manned only on a normal, 5 day per week, cycle. Since there will be no activity during the period when the facility is not manned, this requirement should be clarified to show that when a facility is manned on a normal work-week cycle, visual monitoring during that normal work-week cycle will be an adequate monitoring program and the other monitoring methods will not be required in this case.

Article 5

Section 2651(b)(2). Why is it necessary to report the clean up cost? All Water Resources should be concerned with is that the job is properly done.

Section 2652(b). " . . . within 24 hours after the release has been detected or should have been detected". The underlined phrase is not needed. It is simply an effort to substitute an office judgement by someone with no responsibility or authority for the operators judgement. This phrase should be removed.

Section 2652(c)(3). Why is it necessary to report the clean up cost? This really is not necessary for Water Resources protection.

Article 7

Section 2670(f). 45 days notice of intent to close a facility seems excessive. This could well be handled like a building permit where each phase must be "kept open" until it has been inspected and approved.

Article 8

Section 2672(b)(3). This section implies that underground piping removed from a tank system must be handled as hazardous waste. This seems to be unrealistic in the case of motor fuel. The concentration of fuel that remains in the pipe would seem to be the same order of magnitude as the zinc which will enter the water system from galvanized pipe, or the chlorine residual in the water supply needed to establish that the bacteria have been killed.

General

There seems to be no way of recognizing some of the practical "facts of life" in these regulations. In the case of industrial motor fuel tanks, many - if not most - have been operated for significant periods of time with no paving around either the filler cap or the dispensing pump. There have undoubtedly been spills around these tanks which will be detected in soil samples, while the tank will be tested as secure. There must be some way of recognizing that such soil contamination, when the tank tests as secure, is historic, represents no immediate threat to the water system, and can remain in place until the tank is removed.

Although it is unpopular to say so, there is no such situation as "Zero Risk". Bulk storage, even underground, involves orders of magnitude less risk (in the overall sense) than storage in large numbers of small, easily spilled or punctured containers such as 55 gallon drums. It is clearly in the best interest of society to verify that the underground tanks are not leaking, and if one is found leaking, to remove it and cleanup what has leaked.

To sieze on the emotional issue of massive danger to our water supply and insist upon multiple tests because each test is not perfect does not seem to

be in the best overall interest of society. So long as the public is convinced that "someone else" is going to pay the price, there will be demands for absolute safety. The public water supply is not now, and never has been "pure". Whether the substance measured in the water supply is a "constituent" or a "contaminent" depends to a significant degree upon who is measuring, and whether the substance is natural or artifically added.

Floride is a case in point. In some parts of the county, it occurs naturally in the water at greater than recommended concentration. It is accepted, however. There is often a very negative reaction to artifically adding florine to the water supply.

The other issue that concerns me is concentration. Many industries are victims of improved laboratory techniques. When measurement was reliable in parts per million, substances (such as TCE) were not detected in water. Now that reliable measurement is possible in parts per billion, substances (such as TCE) are detected in some water supplies. Considered as "bad" in almost any concentration, they must now be cleaned up while no one worried about them when the concentration was too low to detect. Do we repeat the process when parts per trillion or parts per quadrillion can be measured? There seems to be no provision in these draft regulations for realistically assessing at what concentration a substance poses a hazard to the water system. There must be a system of risk assessment built into the regulations.

Subchapter 16
#13 HS

BLUE DIAMOND MATERIALS
3000 EAST SOUTH STREET / P.O. BOX 5399 / LONG BEACH, CALIFORNIA 90805 / (213) 979-1873
A DIVISION OF SULLY-MILLER CONTRACTING CO.
A SUBSIDIARY OF KOPPERS CO., INC.

September 26, 1984

State Water Resources Control Board
P. O. Box 100
Sacramento, CA 95801

RE: Draft Subchapter 16 Regulations

Gentlemen:

Enclosed are comments on the draft Subchapter 16 regulations. As you obviously recognize, the largest number of tanks affected hold gasoline and diesel fuel. Many of these tanks are controlled by relatively unsophisticated people. The complexity of these regulations will make it difficult for the local agency, which probably has limited personnel, to effectively administer them, and for the owners or operators to understand them. It would seem helpful if they could be greatly simplified - particularly the monitoring regulations.

The fiscal impact statement estimates a very large cost, which must ultimately be paid by the public through higher prices or reduced services. There must be an evaluation that all of this cost really produces an identifiable improvement in safety of the water supply. I think some of the costs are really to answer an emotional concern for "pure water" and do not provide increased safety.

Very truly yours,

R. R. Munro

R. R. Munro
Manager of Special Services

RRM/gm

Enc.

Received
OCT 17 1984

BLUE DIAMOND MATERIALS
3000 EAST SOUTH STREET / P.O. BOX 5399 / LONG BEACH, CALIFORNIA 90805 / (213) 979-1873
A DIVISION OF SULLY-MILLER CONTRACTING CO.
A SUBSIDIARY OF KOPPERS CO., INC.

CHAPTER 3
SUBCHAPTER 16
REGULATIONS FOR STORAGE OF HAZARDOUS MATERIALS

Article 3

(13) The alternate construction and monitoring regulations for new motor fuel tanks (Sec 2633 and Sec 2634) seem much more complex than the general tank construction and monitoring regulations (Sec 2631 and Sec 2632). This complexity will make enforcement very difficult by the local agencies, and will make the owners uncertain about what to do and what has been accomplished.

Article 4 - Existing tank monitoring

(13) In general, these monitoring regulations are very redundant. The operator must establish that there is no leakage from the tank - then that there has been no release into the vadose zone (even though the tank doesn't leak) - then that there has been no contamination of groundwater (even though the tank doesn't leak and there has been no release to the vadose zone). The rationale is that the tests are not perfect. Since it is the test itself that is uncertain, the combination of the three tests may not give any greater assurance than a single test.

The estimated cost, based upon the Fiscal Impact Statement, is as much as $12,900 per tank and the annual cost as much as $2,900 per tank for this redundancy. Does this expense really buy any greater assurance of ground water protection? I think the answer is clear that any additional assurance is minimal, at best.

The fact that even with the very substantial number of underground tanks in use, there have been relatively few examples of groundwater contamination shows that the vast majority of these installations have operated with reasonable security. The "overkill" of the redundant testing seems to be somewhat of an emotional response to a perceived massive threat to public health.

Testing to assure against leaking - Yes! Redundancy to satisfy emotional reactions - NO!

(13) Section 2641(b)(4). Since this section exempts tanks from the visual monitoring requirement - apparently for a portion of the time - it would apparently require the institution of other, more expensive, monitoring for the balance of the time. Many facilities are manned only on a normal, 5 day per week, cycle. Since there will be no activity during the period when the facility is not manned, this requirement should be clarified to show that when a facility is manned on a normal work-week cycle, visual monitoring during that normal work-week cycle will be an adequate monitoring program and the other monitoring methods will not be required in this case.

Article 5

13 Section 2651(b)(2). Why is it necessary to report the clean up cost? All Water Resources should be concerned with is that the job is properly done.

13 Section 2652(b). " . . . within 24 hours after the release has been detected or should have been detected". The underlined phrase is not needed. It is simply an effort to substitute an office judgement by someone with no responsibility or authority for the operators judgement. This phrase should be removed.

13 Section 2652(c)(3). Why is it necessary to report the clean up cost? This really is not necessary for Water Resources protection.

Article 7

13 Section 2670(f). 45 days notice of intent to close a facility seems excessive. This could well be handled like a building permit where each phase must be "kept open" until it has been inspected and approved.

Article 8

13 Section 2672(b)(3). This section implies that underground piping removed from a tank system must be handled as hazardous waste. This seems to be unrealistic in the case of motor fuel. The concentration of fuel that remains in the pipe would seem to be the same order of magnitude as the zinc which will enter the water system from galvanized pipe, or the chlorine residual in the water supply needed to establish that the bacteria have been killed.

General

13 There seems to be no way of recognizing some of the practical "facts of life" in these regulations. In the case of industrial motor fuel tanks, many - if not most - have been operated for significant periods of time with no paving around either the filler cap or the dispensing pump. There have undoubtedly been spills around these tanks which will be detected in soil samples, while the tank will be tested as secure. There must be some way of recognizing that such soil contamination, when the tank tests as secure, is historic, represents no immediate threat to the water system, and can remain in place until the tank is removed.

Although it is unpopular to say so, there is no such situation as "Zero Risk". Bulk storage, even underground, involves orders of magnitude less risk (in the overall sense) than storage in large numbers of small, easily spilled or punctured containers such as 55 gallon drums. It is clearly in the best interest of society to verify that the underground tanks are not leaking, and if one is found leaking, to remove it and cleanup what has leaked.

To sieze on the emotional issue of massive danger to our water supply and insist upon multiple tests because each test is not perfect does not seem to

be in the best overall interest of society. So long as the public is convinced that "someone else" is going to pay the price, there will be demands for absolute safety. The public water supply is not now, and never has been "pure". Whether the substance measured in the water supply is a "constituent" or a "contaminent" depends to a significant degree upon who is measuring, and whether the substance is natural or artifically added.

Floride is a case in point. In some parts of the county, it occurs naturally in the water at greater than recommended concentration. It is accepted, however. There is often a very negative reaction to artifically adding florine to the water supply.

The other issue that concerns me is concentration. Many industries are victims of improved laboratory techniques. When measurement was reliable in parts per million, substances (such as TCE) were not detected in water. Now that reliable measurement is possible in parts per billion, substances (such as TCE) are detected in some water supplies. Considered as "bad" in almost any concentration, they must now be cleaned up while no one worried about them when the concentration was too low to detect. Do we repeat the process when parts per trillion or parts per quadrillion can be measured? There seems to be no provision in these draft regulations for realistically assessing at what concentration a substance poses a hazard to the water system. There must be a system of risk assessment built into the regulations.

Subchapter 16
#14

~~1. RO~~
2. HS

COUNTY OF SAN DIEGO

DEPARTMENT OF HEALTH SERVICES
1700 Pacific Highway, San Diego, CA 92101
JAMES A. FORDE, Director

DIVISION OF ENVIRONMENTAL HEALTH PROTECTION
(619) 236-2243

September 27, 1984

Harold Singer
Division of Technical Services
State Water Resources Control Board
P.O.Box 100
Sacramento, CA. 95801

Dear Mr. Singer:

We have recently received the proposed regulations governing underground storage of hazardous substances developed by your agency. We understand that the public comment period for these draft regulations extends to October 23, 1984. Although we will be submitting detailed comments on specific technical points of the draft regulations in a subsequent letter, we offer the following general preliminary comments.

This Department enthusiastically endorses the primary purpose of the Sher Bill and the draft regulations which is to protect groundwater resources. We have experienced a number of problems from leaky underground tanks in San Diego County and firmly support the need for routine tank testing and monitoring. We further support the concept of encouraging owners of existing tanks to carefully evaluate their underground storage needs in view of their new responsibilities under the law and regulations. Many tank owners, we feel, will choose to either replace their existing single walled tanks with new secondary containment systems or abandon underground storage altogether.

Our major area of concern in the draft regulations is Article 4, "Existing Underground Storage Tank Monitoring Criteria". This article requires a very comprehensive, multi-faceted monitoring program for every existing underground tank, regardless of the existing or potential future uses of the groundwater or the specific hazardous material stored. The monitoring required is designed to give a very high level of confidence in detecting past, present and future leaks. Such an ambitious, duplicative, monitoring program is being imposed on tank owners that, for the most part, have never before been asked to monitor their tanks in any way. Tank ownership under these regulations is very expensive even when there may be no useable groundwater to protect. The Fiscal Impact Statement that accompanies the draft regulations provides estimates of the dollar costs to implement the regulation. For existing underground storage tanks, the initial cost to the owner to comply with the proposed monitoring requirements is estimated to range from $3,600 to $14,700 per tank. Estimated annual operating costs range from $3,200 to $6,160 per tank.

Received DTS
OCT 9 1984

We anticipate a debate in San Diego County of the costs versus the benefits of implementing the monitoring program proposed in the draft regulation. The debate must consider that the cost of monitoring may be very slight compared to the cost of cleaning up a leak from an underground tank or contaminating a water supply. A further point to consider is that when the tank owner is not financially able to bear the cost of a clean up, the cost may be borne by the public. Whenever a clean up is required, however, the extent of the clean up is at least in part related to the existing and potential future uses of the groundwater, whereas the monitoring systems required in the draft regulation are independent of groundwater quality and uses.

In San Diego County, there are some areas where no existing nor potential future uses of the groundwater have been identified in the Basin Plan, and other areas with only limited uses identified. We strongly agree that every existing tank must be monitored and that a reasonable level of confidence in the monitoring program must exist. We submit, however, that the cost to obtain the very high level of confidence in leak detection afforded by the monitoring program outlined in the draft regulations may not be justifiable in all areas of the County or for all materials defined as hazardous substances. The variance procedures outlined in the regulations offer the only mechanisms for approval of a less comprehensive monitoring program. With a proposed process fee of $26,000 for a categorical variance and $7,750 for a site specific variance, however, the variance procedure offers slight relief for most small businesses.

We sincerely appreciate the time and expertise you and your staff have devoted to the regulations and look forward to your response to our comments.

Please contact Mr. Larry Aker, Manager, Hazardous Materials Management Unit, at (619) 236-2222 if you have any questions regarding the above.

Sincerely,

GARY STEPHANY, Chief
Division of Environmental Health Protection

GS:VG:mb

cc: James A. Forde
Donald G. Ramras, M.D.
RWQCB

#14 B HS

COUNTY OF SAN DIEGO

DEPARTMENT OF HEALTH SERVICES
1700 Pacific Highway, San Diego, CA 92101
JAMES A. FORDE, Director

October 22, 1984

Harold Singer
State of California
State Water Resources Control Board
Paul Bonderson Building
901 "P" Street
P.O. Box 100
Sacramento, CA 95801

Dear Mr. Singer:

We have completed our review of the proposed regulations governing the underground storage of hazardous materials and offer the following comments. These comments are in addition to those submitted in our letter dated September 27, 1984, and in our staff report transmitted by the San Diego County Board of Supervisors to your Board on October 18, 1984. In the following comments, we have identified each subject section, provided a brief discussion and comment, and offered our recommendation.

Article I: General.

Section 2610(c) Applicability: This section allows that a city may, by ordinance, assume the responsibility for implementing the provision of the regulations within its boundaries. We recommend that a city be required to notify the designated County agency at least one year in advance of the effective date of the City ordinance to allow the existing designated agency adequate time to make administrative and staffing adjustments.

Article II: Definition of Terms.

Section 2620: Under the present definition of "existing underground tank," a tank that has been legally removed or destroyed between January 1, 1984, and the effective date of the regulation is still considered an existing tank, subject to the monitoring requirements detailed in the regulations. Since such a tank no longer actually exists, we recommend that the definition of existing underground tank be revised to exempt such tanks.

Article III: New Tank Construction and Monitoring Standards.

Section 2631(h): This section provides the criteria for an acceptable double wall tank. In addition to the proposed criteria, we suggest that, to be acceptable, the double wall tank must be designed so that a leak in any part of the primary wall will be directed to the monitoring port(s) or device(s) and that the two walls of the tank be essentially independent of each other.

Received DTS
OCT 23 1984

Section 2632(b): This section appears to require a permanently installed pump or some other permanent means of removing precipitation or hazardous substances, including liquid leakage from the primary containment. We do not believe that it is necessary or advisable to require a permanently installed pump system.

Section 2632(e): This section requires that a continuous sensing devise must be used to monitor the space between the primary and secondary containment. Due to the very limited number and types of continuous sensing devices presently on the market, the number of reported operating and maintenance problems with the devices, and their high cost, we suggest that a manual monitoring method be available as an option. We recommend that this be permitted only for double walled tanks due to the fact that the integrity of the secondary containment provided by a double wall tank is easily assessed in contrast to that of a liner system. We suggest that regulations establish guidelines for the local agency to approve a time schedule for manual monitoring that in combination with the double wall tank design will provide a high probability of containment and timely discovery of an unauthorized release.

Section 2633 Construction Standards for New Motor Vehicle Fuel Tanks: Under the draft regulations, an exemption from secondary containment requirements is allowed for pressurized motor vehicle fuel product piping that is equipped with a leak detection device that meets the criteria given in Section 2633(f). This is the only pipeline exemption specifically allowed in the regulations. We have previously expressed our concern that the exemption allowed in Section 2633(f) is inconsistent with the overall intent of the law. (Please refer to the staff report that was transmitted to your office by the San Diego County Board of Supervisors).

One exemption from secondary containment that we feel should be addressed in the draft regulation is for product piping associating with a suction (vacuum) delivery system. Information provided to this department indicates that a suction delivery system will not work if there is a leak in the line. Thus, early leak detection is built into the delivery system. Suction delivery systems for motor vehicle fuel tanks are proposed today only for small volume operations. We suggest that the regulations be amended to allow suction delivery systems for motor vehicle fuel tanks to be exempted from seconday containment requirements.

We recommend that Section 2633 specifically address secondary containment requirements for vapor return lines associated with gasoline tanks. The Vapor return lines of some of the vapor recovery systems presently approved by the Air Resources Control Board contain fuel during normal operation, whereas other systems are essentially liquid free. This issue needs to be specifically addressed in the regulations.

Section 2635 General Construction Standards: This section does not thoroughly address the construction, installation, and testing of secondary containment systems. We recommend that Section 2635(d) be amended to read, "All primary containers, secondary containers, and double walled tanks shall be installed according to the manufacturer's written recommendations or if no written recommendations exist, best engineering practice."

In addition, we recommended that a new subsection be added to require that all secondary containment systems be tested after installation to assure that such systems are operative and leak-tight. The regulation might establish testing procedures for the secondary containment, or specify that the testing shall be done in accordance with manufacturers instructions or best engineering practice.

Section 2635(b): This section requires that a steel striker plate be installed under all accessible openings of the underground tank. Please clarify whether "accessible openings" is meant to include monitoring ports on double wall tanks.

Section 2635(f): This section addresses overflow protection systems that may be required by the local agency. Another system that should be included in this section is the installation of ball float valves in the vent and vapor return lines of the primary containment of tanks that do not receive product under pressure. When installed properly, the float will block the vent line when a high liquid level is attained, thereby preventing the escape of air from the tank. This action causes the pressure inside the storage tank to equalize with the discharge head in the delivery vehicle, thereby interrupting the flow of liquid.

Section 2635(h): This section addresses cathodic protection of steel tanks and requires that the type of protection shall be based on the corrosion history of the area and the judgement of a registered corrosion engineer. We suggest that this section be amended to allow tanks with protective coatings that have been certified as corrosion resistant by a nationally recognized testing organization, such as Underwriters Laboratories, to be installed without a site-specific endorsement by a registered corrosion engineer.

Article 4: Existing Underground Storage Tank - Monitoring Criteria.

Please refer to our letter dated September 27, 1984, and staff report transmitted by the Board of Supervisors for our comments on this article.

Article 6: Allowable Repairs.

Section 25284.5 of the law (Chapter 6.7 of the California Health and Safety Code) allows that a tank containing motor vehicle fuel not under pressure may be repaired once by an interior coating process if the tank meets certain requirements. To be consistent with the law, Article 6 must be amended to clearly state that it applies only to underground motor vehicle fuel storage tanks not under pressure.

Article 7: Closure Requirements.

Section 2670(b) and Section 2671(a): These sections define the time frame limit for "temporary closure" as two years. This time frame is in conflict with the Uniform Fire Code, Section 79.113(e) which specifies that a tank can have "temporary closure" status for only up to one year.

Article 8: Categorized and Site Specific Variance Procedures.

The staff report that has been transmitted to your office by our Board of Supervisors includes a general comment on this Article.

Article 9: Local Agency Additional Standards Request Procedures.

The proposed processing fee of $11,500 is totally unreasonable. No County or designated local agency will be able to submit recommendations to improve the efficacy of the program if a fee is required.

Article 20: Permit Application, Annual Report and Trade Secret Requirements.

Section 2712(f): This section allows that a local agency may issue a provisional permit in cases where the underground storage tank does not completely conform to Article 3 or 4 of the regulation, valid for a time period not to exceed three months. Based on our knowledge of the type and number of tanks in San Diego County, our projected staffing level, and the lead time required by many businesses and public departments to appropriate funds, we suggest that the three month time limit be increased to six months. We further recommend that the local agency be allowed to extend the provisional permit for an additional six months. Section 2712(f) also specifies that the local agency inspect the underground tank within 15 days of the expiration of the provisional permit. Since we are anticipating that a significant number of the estimated 10,000 tanks in San Diego County may require a provisional permit, we feel that 15 days is an unreasonable time constraint and suggest it be extended to 60 days.

We appreciate the opportunity to comment on the draft regulations and look forward to your response. Please contact Ms. Victoria Gallagher, Hazardous Materials Management Specialist, at (619) 236-2222 if you have any questions regarding the above.

Sincerely,

Gary Stephany, Chief
Division of Environmental Health Protection

GS/VG/lh

cc: D.G. Ramras, M.D.
Regional Water Quality Control Board

#14c

COUNTY OF SAN DIEGO

DEPARTMENT OF HEALTH SERVICES
1700 Pacific Highway, San Diego, CA 92101
JAMES A. FORDE, Director

SMOKING ENDANGERS EVERYONE'S HEALTH

DIVISION OF ENVIRONMENTAL HEALTH PROTECTION
(619) 236-2243

November 21, 1984

Harold Singer
State of California
State Water Resources Control Board
Paul Bonderson Building
901 "P" Street
P.O. Box 100
Sacramento, CA 95801

RE: UNDERGROUND TANK REGULATIONS - REVISED DRAFT

Dear Mr. Singer:

We have recently received the draft underground tank regulations which will be considered for adoption at the Tuesday, November 27, 1984 Board meeting. Our cursory review indicates that the revised draft offers a better framework for the regulation of underground storage tanks. We are encouraged to note that a number of the recommendations we made in our earlier letters of comment have been incorporated into the revised draft.

However, in light of the short period of time allotted for public review of this document coupled with the mandate that the regulations be adopted by January 1, 1985, we are concerned that there may not be sufficient time to address all of the pertinent issues. Due to the extent of the changes in the current draft and the inherent complexities of this new regulatory program, it is our feeling that a thorough evaluation cannot occur during a pre-implementation review. We would like to suggest that the draft regulations be amended to require the Board to hold a public hearing one year after the effective date of the regulations to consider any necessary changes.

We appreciate the time and effort you and your staff have devoted to the development of the regulations. Please contact Ms. Victoria Gallagher, Hazardous Materials Management Specialist, at (619) 236-2222 if you have any questions regarding the above.

Sincerely,

Gary Stephany
Environmental Health Protection

Received DTS
NOV 26 1984

GS:DM:lr

cc: Dr. Ramras
RWQCB

Subchapter 16 #15 HS REGS FILE

Worldwide Headquarters
7700 France Avenue South
Minneapolis, Minnesota 55435
(612) 830-2121

National Car Rental

A HOUSEHOLD INTERNATIONAL COMPANY

October 2, 1984

Ms. Eve Erskine
California Water Resources Control Board
P.O. Box 100
Sacramento, CA 95801

Re: Regulations for Hazardous Substance Storage

Dear Eve:

Thank you for giving me the status update on the regulations for the underground storage monitoring equipment currently being drafted by the California Water Resources Control Board. You have indicated that the regulations are still in the draft stage and may be substantially revised before the final regulations are issued. For that reason, I concur with your suggestion and that of the local consulting engineer that National should not proceed with installation of any systems until the final regulations have been issued and the performance requirements of the monitoring equipment are known.

My concern is with the compliance deadlines specified in the law. With regard to registration of the tanks, National will have completed its evaluation of responsibility as it relates to the landowners from whom we rent property prior to the January 1, 1985 date when penalties are assessed. As to the regulation of the tanks, however, if the Board's regulations are not issued until January 1, 1985, and the equipment complying with those regulations must be in place by January 1, 1985, it is clear that compliance may be impossible. For this reason National urges that, insofar as your power permits, the regulations issued by the Board contain a grace period for compliance during which penalties would not be assessed. There is a substantial amount of confusion as to what is required by the new law and firms have indicated to National there are not enough drillers in the State to accomplish all that would have to be done by the January 1, 1985 deadline. I appreciate that your office cannot predict whether cities and counties will try to enforce the deadlines or not. However, I believe that a statement or recommendation by the Board in its regulations concerning the need for adequate time for companies to review and comply with the final regulations would be helpful.

Thank you again, Eve, for your cooperation and assistance. I look forward to receiving the draft of proposed regulations and the

Received DTS
OCT 10 1984

listing of programs currently in affect in cities and counties in California. As you suggested, I will check with your office later in the month to make sure there has been no rescheduling of the public hearing on October 23, 1984 at 10:00 a.m. to be held in the First Floor Auditorium of the Resources Building at 1416 Ninth Street in Sacramento.

Very truly yours,

NATIONAL CAR RENTAL SYSTEM, INC.

Mary

Mary Carroll Wahl
Senior Attorney
Properties Department

/jo
cc: Bill Smidt, Phil Riley, John Acker

HS

15-B

Worldwide Headquarters
7700 France Avenue South
Minneapolis, Minnesota 55435
(612) 830-2121

National Car Rental

A HOUSEHOLD INTERNATIONAL COMPANY

January 14, 1985

FEDERAL EXPRESS

State Water Resources Control Board
Division of Water Quality
901 P Street
Sacramento, California 95814

RE: Proposed Underground Tank Regulations
California Administrative Code - Title 23 Waters
Subchapter 16 Underground Tank Regulations

Dear Members of Water Resources Board:

As Director of Construction at National Car Rental System, Inc., I have had the opportunity to review your latest proposal for underground tank regulations. National Car Rental System, Inc. vehemently objects to the requirement of Section 2631 regarding construction standards for new underground storage tanks (a) that states as follows: "Primary and secondary levels of containment shall be required for all new underground storage tanks used for the storage of hazardous substances as defined in Article 2, further the reason that such tanks would cost twice as much as current accepted installation practices."

National also objects to the requirement of Section 2712 Permit Conditions (d) which only permits a permit issued by the appropriate local agency to be effective for five years. We feel the permit should have an indefinite life to it. There is no advantage to a short-term permit, but there are great disadvantages to both the State of California and the industry in requiring issuance of new permits every five years. Both the State and the industry will suffer from needless paperwork, expense, processing of information and addition of personnel for unnecessary reasons.

Sincerely,

NATIONAL CAR RENTAL SYSTEM, INC.

Brian Anthony
Director
Construction Department

BA/MSA:bkd
cc: Rick Brew
Bob Bouta
Cindy Nettle
Mary Wahl

Received DTS
JAN 15 1985

Worldwide Headquarters
7700 France Avenue South
Minneapolis, Minnesota 55435

National Car Rental

State Water Resources Control Board
Division of Water Quality
901 P Street
Sacramento, California 95814

MAC ADAM INTERNATIONAL

MAC ADAM

POST OFFICE BOX 2552 TERMINAL ANNEX LOS ANGELES, CALIFORNIA 90054

LOS ANGELES CALIF. OCT-5'84

U.S. POSTAGE 1.55 T-N METER 603796

10/10/84

State Water Resources Board
P.O. Box 100
Sacramento, CA 95801
ATTN: Mr. Harold Singer

CERTIFIED
P03 6287316
MAIL

LOS ANGELES, CA 90012A
5 OCT 1984
-PM-

Subchapter 16
#16

MAC ADAM INTERNATIONAL INC.

MAC ADAM

POST OFFICE BOX 2552 TERMINAL ANNEX LOS ANGELES, CALIFORNIA 90054

October 4, 1984

Harold Singer
State Water Resources Board
P.O. Box 100
Sacramento, CA 95801

Dear Mr. Singer

It is our understanding that a new law is going to come into effect July 1, 1985, which is going to measure leakage of our gas tank. This law will also require our gas tank to be glass lined. To this date we have not been formally notified by the state of this new law.

We are totally against this costly measure. We have had estimates for what you are asking for in this law and $40,000.00 would seem a bit too high for what we would receive in return.

We have always supported what the state has tried to do against pollution, but we feel this is going too far. As such, we will back any lobbying done to oppose this new law.

Truly yours,

William Mac Adam
Chairman of the Board
MAC ADAM INTERNATIONAL

/am

TELEPHONE (213) 264-2480 24 HR./7 DAY/2-WAY RADIO

Subchapter 16
#17

TELEPHONE 896-1822

DARLING OIL AND TIRE

11010 EAST MOUNTAIN VIEW AVENUE • P.O. BOX 750 • SELMA, CALIFORNIA 93662

October 5, 1984

Presentation of Written Comments

Your proposed regulations governing underground storage of hazardous substances if adopted will be financially ruinous to the small jobber and service station owner.

Please consider this alternative proposal that would be just as effective in protecting the public and at the same time eleviate needless business failures. It would be to:

(1) Require Annual Tightness tests

(2) Require daily tank stickings with close inventory control

(3) Any irregularities should be checked with tightness tests

I am a gasoline jobber and have purchased 7 service stations during my 28 years in business. (They are not all paid for yet!) I keep daily inventories by having the tanks stuck and by meter readings. Periodic tightness test could confirm to you that there is no leakage.

You must be aware of the economic plight the jobber has been in for the past 3 years. Heaping the cost of digging expensive test wells and buying the monitoring systems all at once would be one sure way of killing the jobber.

The protection of our waters is a problem of all the public and all the public should share the cost. Putting the financial burdern on a few is very discriminatory.

Sincerely,

Richard A. Darling

Richard A. Darling

Received DTS
OCT 9 1984

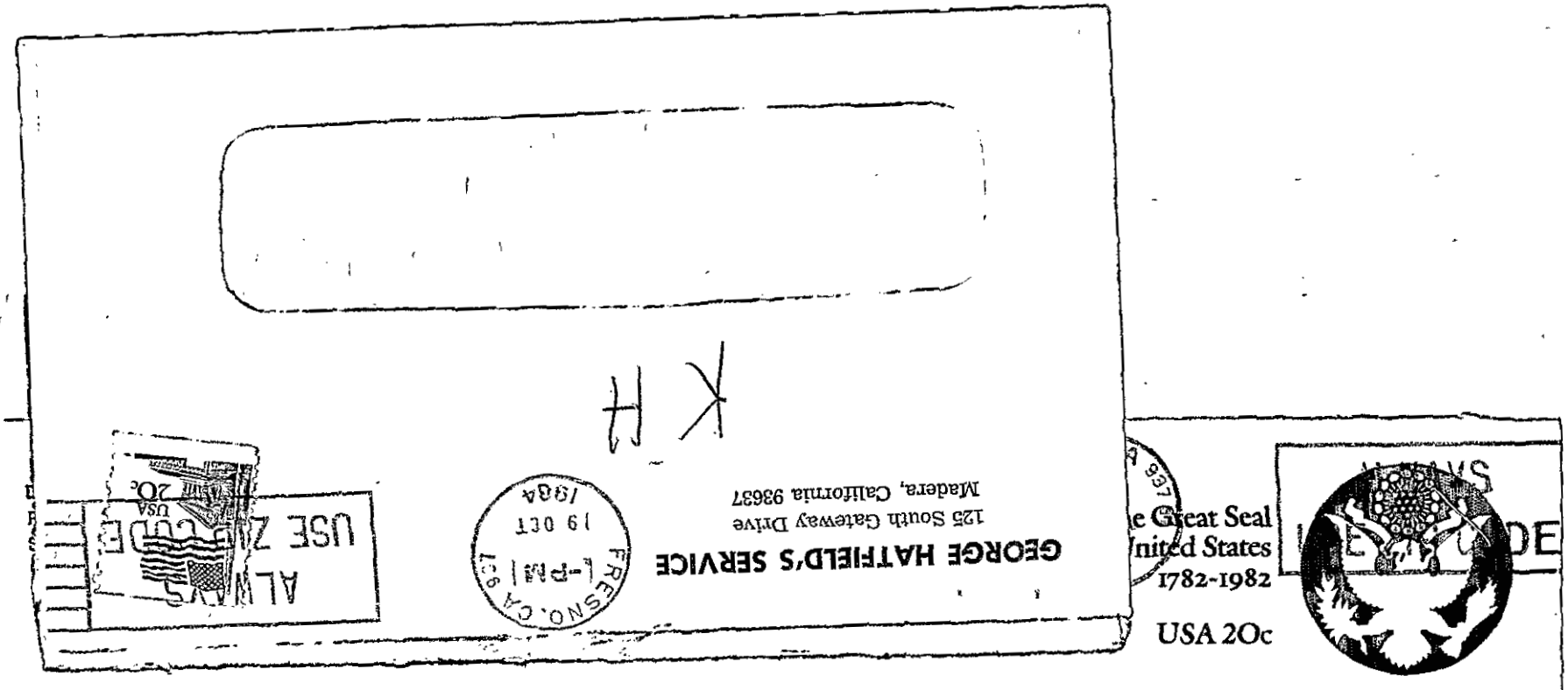

STATE WATER RESOURCES CONTROL BOARD
P.O Box 100
Sacramento, Ca. 95801

Attn: Harold Singer
Division of Technical Serivices

125 South Gateway

Received Div
OCT 12 1984

Subchapter 16
18

Phone 674-4771

GEORGE HATFIELD'S SERVICE
MOBIL OIL PETROLEUM PRODUCTS
Madera, California 93637

STATE WATER RESOURCES CONTROL BOARD
1416 9th ST.
SACTO. 95814

	Charges	Credits	Balance
10/8/84			

I APPRECIATE WHAT YOU ARE TRYING TO DO ON STORAGE TANKS USED FOR "HAZARDOUS" MATERIALS BUT BEING A 'SERVICE' STATION DEALER "INDEPENDTLY" OWNED - "YOU" ARE GOING TO PUT ME & MANY OTHERS OUT OF BUSINESS

DUE & PAYABLE

1½% Finance Charges will be added on Accounts 30 days past due, which is an annual rate of 18%.

125 South Gateway

Phone 674-4771

GEORGE HATFIELD'S SERVICE

MOBIL OIL PETROLEUM PRODUCTS

Madera, California 93637

Charges	Credits	Balance

IF WHAT THE LOCAL BOARD TOLD US ABOUT THE COSTS WERE ANY-~~WHERE~~ WHERE NEAR THE TRUE FIGURE. I HOPE THAT THE BOARD + COMMITTEE LISTENS TO ANY + ALL SUGGESTIONS THAT COME BEFORE YOU —

George Hatfield

DUE & PAYABLE

1½% Finance Charges will be added on Accounts 30 days past due, which is an annual rate of 18%.

12739 Lakewood Boulevard
Downey, California 90242

DOWNEY
OCT 15 '84
CALIF.

U.S. POSTAGE
0.20
REGISTERED
1422850

RECEIVED
OCT 15 1984

RETURNED FOR POSTAGE

Mr. Harold Singer
Division of Technical Services
State Water Resources Control Board
P.O. Box 100
Sacramento, CA 95801

Subchapter 16 # 19 HS

James F. Nicholas
Independent Owner
G. St. Mobil Services
2104 G. Street
Merced, CA. 95340
(209) 722-0169

October 8, 1984

Mr. Harold Singer
State Water Resources Control Board
P.O. Box 100
Sacramento, California 95801

Subject: Comments regarding underground storage of hazardous substances - Proposed Regulations

Dear Mr. Singer:

This is in regard to the proposed regulations regarding storage of hazardous substances. I, as a small business owner of a service station, feel that the staff of the State Board should have investigated and reported to the public, the estimated cost to small businesses this regulation entails other than the statement a significant adverse economic impact.

I, for one, am very concerned regarding our national resources, water, air, etc. But I have also observed, over the passing years, the ill effects of hastily conceived legislation at the Federal, State and Local level, that cost the business owner and public a great deal of money, with very little benefit to our environment.

In reviewing the copy of the proposed regulations, I find it very difficult to comment intelligently, due to the lack of facts, such as (1) estimated cost - what will it cost to monitor per tank? (2) tank testing cost? (3) ground water detection monitoring, etc. costs?

In such cases where tanks have to be replaced or repaired, will there be some type of relief to the small business owner, such as low interest loans, etc., or will he be put out of business? At that point only the large oil companies who can afford this cost, would be able to operate in this state.

In summary, I would like to present this at the hearing in person, but unable to do so, I do hope the above comments will be presented and given consideration.

Yours very truly,

James F. Nicholas

James F. Nicholas

Received DTS
OCT 15 1984

Subchapter 16 #20

CALIFORNIA TARGET ENTERPRISES, INC.

12739 Lakewood Boulevard
Downey, California 90242
(213) 927-5339
(714) 994-4981
Telex 691144
"Target Dwny"

October 9, 1984

Mr. Harold Singer
Division of Technical Services
State Water Resources Control Board
P.O. Box 100
Sacramento, CA 95801

Re: Proposed Regulations Governing Underground Storage of Hazardous Substances

Dear Mr. Singer

We are a small retailer of petroleum products, doing business in the greater Los Angeles area, and, as such, are very interested in the proposed regulations governing underground storage of hazardous substances. The projected expense of complying with the regulations as proposed is considerably more than our total income; in fact, nearly ten times more. Such an expense would leave us no alternative other than bankruptcy, a situation which we understand would face virtually all independent businesses such as ours.

We would like to suggest that businesses in this situation be exempted from the proposed regulations, or, at the least, be allowed a ten-year phase-in period. Otherwise, the entire matter will become academic, since we will not be in business at all.

Very Truly Yours,

Robert L. French
Executive Vice President

RLF:gl

Received DTS
OCT 17 1984

#20 B

October 23, 1984.

Testimony of Robert L. French

Executive Vice President
California Target Enterprises
12739 Lakewood Blvd.
Downey, Ca. 90242
(213) 927-5339

In Opposition to the Proposed Pollution Control Legislation in the Service Station Industry

I represent California Target Enterprises, Inc. We are Independent retail gasoline marketers located in Southern California. We operate approximately 150 retail service stations with some eight hundred employees.

Traditionally, it is our segment of the industry which has created competition in the industry. We are the high volume, low price(and extremely low margin) marketers of gasoline. The benefit that the public receives from having from having Independent competition can probably not be calculated.

However our very survival hinges on this legislation. Our response to this proposed legislation is simple. If this legislation is enacted, we would be forced out of business as soon as compliance would be required.

It is our opinion that this proposed legislation is excessive and that the desired results can be obtained with far less cost to us and the motoring public.

We would propose the following:

1. Leak Detectors. The Red Jacket Co. currently makes a leak detector that is installed in the submerged pump that works well. They can be installed in most submerged pumps at a reasonable cost. They have been on the market for a number of years and have been tested extensively.

2. Annual Tank Testing. A test such as ARCO invented seems to work well with a minimum of down time to the service station, and a written chart produced by the machine that would prove tank integrity.

3. Inventory Reconciliations. We would suggest that daily inventory reconciliations be kept and made available for inspection at any reasonable time.

4. No Fault State Insurance. A No Fault State Insurance plan, with the premiums charged to all underground tank owners on a "per tank" fee basis. Our reasoning is that many years ago when most storage tanks were above ground, fire marshalls required that because of the fire danger, that all gasoline tanks should be undergtound. If there were spills, the ground would absorb the gasoline and there would be no fire danger. That thinking has continued to this day. The approved dumping spot for minor spills has been the ground. Now, many years later, the gasoline is still where it was originally spilled. No one really knows at most stations over ten years of age, what has been put into

the soil. Therefor we feel that this type of program is a fair methop of dealing with the problem.

Double Wall Tanks. When a tank does fail, we would support a requirement that they be replaced with the new double wall tanks.

We believe that our program would protect our enviornment, Our company, and the Independent segment of the retail service station industry.

Thank you

Robert L. French

Original Comments 21-30

Index to Rulemaking File Underground Storage Tank Regulations Title 23, Waters Division 3, Water Resources Control Board Chapter 16, Underground Storage Tank Regulations 1985

Subchapter 16
#21

1. RQ
2. HS

HAASE

Windofen®
Wärmepumpen

Wärmespeicher
Tanks

ICH BIN ZWEI ÖLTANKS.

State of California
California Water Quality
Control Board
Division of Technical Services
P.O. Box 100
Sacramento, California 95801

Haase-Tank GmbH & Co. KG
Gadelander Straße 172
2350 Neumünster
Telefon (0 43 21) 87 80
Telex 02 99 716

Ihr Zeichen
Unser Zeichen/Datum he-w 02.10.1984
Sachbearbeiter/in
Büro

Att: Mr. Herold J. Singer
Re : California Administrative Code
Title 23 Waters
Chapter 3 Water Resources Control Board
Subchapter 16 Regulations for storage of hazardous substance

Gentlemen:

This is further to your Mr H. Singer meeting with our U.S. agent Mr. Frank P. Bergonzi on September 18, 1984. Regarding comments to the subject subchapter.

A. Please reference section 2635 paragraph b 4 and b 5. Each paragraph should be more consistent in wording. Item b 5 should have the same wording as item b 4. Therefore we suggest the following change to item b 5. "Fiberglass reinforced plastic tanks shall be fabricated and designed in accordance with u.l.-standard 1316, standards for glass-fiber-reinforced plastic underground storage tanks for petroleum, July 1983 or Underwriters Labority of Canada, standard ulc-5613-1977. Standard for reinforced plastic tanks for petroleum products, March 1977 and any other recognized independent labority or governmental agency."

B. Section 2635 , item b 1
Steel plates in tanks storing hazardous substance may be attacked by corrosion. Therefore the steel plate will be weakened or disintegrate in time and would defeat the intent of the law.

Therefore striker plates should be compatible with the substance being stored, furnished by the tank manufacturer and striker plates should be installed under all tank manways(access covers) and openings.

Received DTS
OCT 9 1984

Büros in: Flensburg: 2397 Handewitt/Ortstel Timmerstek. Tel. (0 46 08) 4 13 · Hamburg: 2000 Braak Post HH 73 Mlendiek 40 Tel (0 40) 6 77 00 77, Telex 02 173 687 · 1000 Berlin 30 Europa-Center 15 Stock Tel (0 30) 2 61 33 66 · 3000 Hannover 73 Hägenstraße 12 Tel (05 11) 58 70 67 · 4300 Essen 18 (Kettwig) Im Teelbruch 38-40 Tel. (0 20 54) 70 91, Telex 08 579 133 · Frankfurt: 6054 Rodgau (Weiskirchen) Liebigstraße 2 Tel. (0 61 06) 50 91, Telex 0 417 856

Deutsche Bank Neumünster, Konto 51/99 088, BLZ 212 700 20
Volksbank eG Neumünster, Konto 33 600 BLZ 212 900 16
Postscheckamt Hamburg Konto 222161-204 BLZ 200 100 20

Haase-Tank GmbH & Co. KG · Eingetragen HRA 765 · Komplementär: Verwaltungsgesellschaft Haase-Tank GmbH
Eingetragen HRB 190 · Amtsgericht Neumünster · Sitz der Gesellschaft Neumünster · Geschäftsführer Harry Haase
Gemäß BDSG geben wir hier davon Kenntnis, daß wir Daten, die für die Geschäftsabwicklung erforderlich sind, speichern.

FE-57/6.84 WD

C. Section 2661 page 6.2 - repair
Double walled tanks that may be damaged by other means than corrosion should be allowed to be repaired as recommended by the tank manufacturer.

D. Section 2642 underground storage tank testing.
Double walled tanks equipped with continous leakage warning systems should be allowed to use its system in order to demonstrate tank integrity. The leakage warning system should be operated
1. before tank is installed
2. during installation
3. after tank is installed and before commissioned.

Please reference assembly bill no.1362
chapter 1046

Section 2528
Please mail to our U.S. agent Betco Associates, Po.Box 350, Closter, N.Y. 07624 , copy of master list of hazardous substances.

Thank you for considering the above proposed changes and additions.

Very truly yours,

Haase-Tank GmbH & Co. KG

(Kurt Hennighausen)

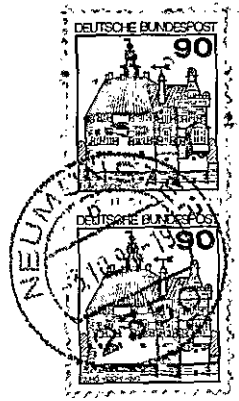
DEUTSCHE BUNDESPOST
90
DEUTSCHE BUNDESPOST
90
NEUM

MIT LUFTPOST
PAR AVION

Subchapter 16
22

1) RG
2) HS

JOOR MANUFACTURING, INC.
1189 INDUSTRIAL AVENUE • ESCONDIDO, CALIFORNIA 92025
TANKS • PRESSURE VESSELS • CONTAINERS • CUSTOM STEEL FABRICATION
Phone (619) 745-0971

October 10, 1984

State Water Resources Control Board
Paul R. Bonderson Building
P. O. Box 100
Sacramento, CA 95801

Attention: Mr. Harold Singer
Division of Technical Services

Dear Mr. Singer:

We are pleased to respond to your Request for comments on the proposed Regulations for the Underground Storage of Hazardous Substances dated August 23, 1984. In the comments following, we have identified each subject section, provided a discussion and comment and then, where indicated, a suggested rewrite of the Regulations text.

Section 2631(h) - This section refers to the requirements of Sections 2631(b) and (c) which speak to the volumetric requirement for secondary containment. It is understood that the secondary containment should be totally communicative with itself and that there be no dead ends or entrapments where liquid can collect without being monitored.

Suggested language for 2631(b), "Double-wall tanks which satisfy the requirements of Section 2631(b) and (c) shall be considered to fulfill the volumetric requirements for secondary containments specified in Section 2631(d) provided that the secondary containment is continuous and interconnective so that fluid flow within the secondary container is not totally restricted in any direction."

Section 2632(b) - This section appears to require a permanently installed pump or some other means of removing precipitation or hazardous substances, including liquid leakage from the primary containment. The following is suggested as replacement wording:

"Secondary containers shall be equipped with a collective system to gather, hold and permit the removal of any precipitation, subsurface infiltration or hazardous substance leakage from the primary container."

Section 2632(f) - The text as written calls for continuous monitoring using a pressure sensor. There are many other types of

Received DTS
OCT 12 1984

sensors which can be used for either continuous or intermittent monitoring. It is suggested that the first sentence of this section be changed to read:

"The interstitial space of a double-wall tank shall be monitored continuously using a sensing device capable of activating a stratigically located aboveground alarm system. Double-wall tanks which utilize this type of leak detection system are exempt from the requirements of Section 2632(c), (d) and (e)."

Section 2632 - It is believed that this section should contain authorization for manual monitoring systems which should be permitted on a regular time basis when the combination of scheduled manual monitoring and double-wall tank design provides a high probability of containment and timely discovery of any unauthorized discharge.

Section 2633: This section address' the use of single-wall tanks using types of secondary containment other than double-wall tanks. If the requirements of Paragraph 2633(b) are applied to double-wall tanks, one would be required to protect only the outer surface of the primary container with corrosion resistant materials, thereby leaving the exterior of a double-wall tank unprotected.

Paragraph (f) in the proposed regulations allows pressurized piping systems to be exempt from secondary container requirements if a pressure loss leak detector is provided and connected to a visual or audible alarm or a pressure detector is used which provides at least a 50% reduction from normal flow rates in the event of a leak. It is suggested that a 50% reduction is much too high in that an anticipated leakage rate not discovered by a system capable of responding to a 50% flow rate requirement would permit unauthorized discharges greatly in excess of those permitted for storage tanks i.e. .05 gallons per hour.

It is suggested the following change and addition be made to Section 2633:

Change Paragraph (f) to (g).

Add new Paragraph (f) - Double-wall tanks which meet the requirements of (c) and (d) above shall be considered to comply with the requirements of this section provided that the secondary containment (outer tank) shall consist of a product-tight tank constructed of fiberglass reinforced plastic, cathodically protected steel, or steel clad with glass fiber reinforced plastics and that the double-wall tank is installed in accordance with the manufacturer's instructions.

Section 2634(a), (4): This paragraph permits the use of a leak monitoring flow reduction device providing a 50% reduction from

normal flow rate when activated. That rate is at least five times too high to be consistant with tank leakage rates.

Section 2635(b)(1) - The text requires a "...0.25" thick steel wear plate (striker plate)..." under all "accessible openings" of the underground tank. A plate, as installed, must be fixed in place under each opening and have a minimum area equal to the opening or guide tube (both of which are essentially the same area).

The 0.25" thick specification is an arbitrary one and should be deleted. The striker plates are mandatory in non-metallic tanks and have been suggested for steel tanks as a cautionary measure. If the regulations are to insist on striker plates in steel tanks, the size and the installation of those plates should be left to the determination of the manufacturer so that the plate size can be in accordance with the wall thickness of the tank. The wall thickness', in turn, are determined by Underwriters Laboratories et al. Further, the specification that the plate have a minimum area equal to the opening is inadequate in that the impact area for a measuring stick inserted in an access hole without a drop tube is much wider than the area of the hole. The plate, if retained, should be at least one foot square.

Paragraph (b),(1) refers to all "accessible openings" which seems to indicate that striker plates are required under the monitor fittings of a double-wall tank. That assuredly was not the intent of the proposed regulations.

It is suggested that Section 2634(b)(1) be rewritten as follows:

(1) A steel wear plate (striker plate) shall be installed and centered under all accessible openings of the primary tank. The plate shall conform to the contours of the tank and be bonded or welded in place. The plate shall have a minimum area of one square foot. Plate thickness shall be 0.25" minimum for non-metallic tanks. Plates for steel primary tanks shall be equal in thickness to the wall thickness of the primary tank or 0.25", whichever is less.

Section 2635(b)(3) - The subject paragraph refers to hydrostatic or pressure testing in accordance with standards and procedures set forth in Article 4. These two types of tests are for totally different purposes and should not be combined in one paragraph. There would be little purpose in hydrostatically testing new tanks, as just installed, since they have been leak tested aboveground as part of the certification procedure.

It is suggested that this paragraph be rewritten as follows:

Following installation, all underground tanks shall be tested in accordance with NFPA 30 to assure leak tight installation of the underground tank and its attached pipes.

Section 2635(b)(4) - Elaboration is required in this paragraph to incorporate the Listing of underground tanks in accordance with Underwriters Laboratories. The UL 58 standard covers only tanks made entirely of steel. All other types of tanks are Listed by Underwriters Laboratories to be in conformance with the structural standards of UL 58 and with other requirements as imposed by Underwriters Laboratories. In addition, the minimum thickness requirement of 7 gauge (0.18") is inconsistent with some UL 58 requirements and should be deleted. It is not the intent of the regulations to assume the design responsibility for underground tanks.

A suggested rewrite for this paragraph is as follows:

(4) Cathodically protected steel tanks and steel tanks clad with glass fiber reinforced plastic shall be fabricated and designed to Underwriters Laboratories requirements and shall either be Listed by Underwriters Laboratories or shall be in conformance with UL 58 standards for steel underground tanks for flammable and combustible liquids (latest date) or the American Society of Mechanical Engineers, ASME, pressure vessel code Section 8, Division 1, Boiler Vessel Code, 1983.

Section 2635(d) - This section should be written as follows:

All primary containers, secondary containment, and double-wall tanks...

Add a second sentence to read:

All secondary containment systems shall be tested in accordance with manufacturers instructions, local requirements or best engineering practice to assure that such systems are operative and leak tight after installation.

Section 2635(h) - This paragraph indicates that the primary container of a double-wall tank would be required to be made of the same type of corrosion material as a secondary container of a double-wall tank.

The paragraph should be rewritten to read:

(h) Single-wall primary containers of steel and the outer surface of double-walled tanks constructed of steel shall be protected by either a properly installed, maintained and monitored

cathodic protection system with or without coatings or Listed corrosion resistant materials of construction such as special alloys or fiberglass reinforced plastic coatings.

Selection of the type of protection to be employed shall be based on a certification Listing by a Nationally Recognized organization or the judgement of a Registered corrosion engineer taking into account the corrosion history of the area.

Section 2642(d) - Category B - The intent of corrosion resistance systems in tanks is to cause the tank to be corrosion resistant. If the systems are validated by certification, annual testing seems to be an over reaction. It is recommended that the tanks be tested every three years beginning ten years after installation. Such a policy would provide a strong incentive to replace aging, leak-prone tanks with technically superior Listed corrosion resistant tanks.

Section 2661(c) - It is imperative to understand that most corrosion failures of underground tanks occur externally at seams and welded joints. It is imperative therefore that no repairs be made within six inches of such a seam. The existance of a seam failure should be evidence for rejection of the tank to be repaired.

Add the following to Section 2661(c):

(4) Exterior corrosion caused the failure.

(5) Any failure or opening within six inches of any seam or weld.

Section 2662(b) - Should specify that the material be used in the repair "Shall be applied and shall be certified as acceptable, in accordance with nationally recognized engineering practices." The last sentence should be deleted since the API recommended practice #1631 has never been accepted as a standard for the specification of materials to be used for internal repairs of existing fuel tanks.

Section 2663(a) - This section calls out NFPA - 30 leak test as the criteria for testing a successful installation. That particular test is designed to establish the leak tight nature of riser pipes installed in tanks and as such was never and is not intended for leak testing tanks per se. The concern after internal repair is whether a corrosion destroyed tank is then made capable of withstanding the structural forces applied to it as a result of being in a water filled hole, a condition that can be considered as certain since the corrosion probably came from the presence of the

liquid in the first place. It is suggested that a structural loading test be incorporated to establish structural confidence in the finished product.

It is hoped that the above comments are helpful to the Regulation Writing Committee. We offer our services for any assistance required in the future.

Yours truly,

Howard Robbins, P.E.
President

HR/mah

12/7 - Org ~~WGP~~ Anton
cc - Bd #22-C
WRA

JOOR MANUFACTURING, INC.
1189 INDUSTRIAL AVENUE • ESCONDIDO, CALIFORNIA 92025
TANKS • PRESSURE VESSELS • CONTAINERS • CUSTOM STEEL FABRICATION
Phone (619) 745-0971

November 30, 1984

Ms. Carole Onorato, Chairperson
State Water Resources Control Board
P. O. Box 100
Sacramento, California 95801

Dear Mrs. Onorato:

My experience with governmental meetings and processes devoted to regulation creation/code writing is quite extensive. From that solid background I can offer my compliments to you for chairing an exceedingly well run forum. I refer, of course, to the meeting held in Sacramento on November 27, 1984 where the subject was the planned adoption of the proposed regulations to implement A.B. 1362. The meeting was expeditiously run and, in spite of the complexity of the subject, provided the necessary exchange of the diverse opinions on the subject.

Persuant to the conversation I had directly with you in the back of the auditorium during one of the breaks, I wish to request time to make a presentation to you and other board members regarding the little-known subject of interior tank lining. Unfortunately, this subject is one of technical complexity beset with subtleties and the innuendos. It is definately not conducive to proper explanation and understanding in the midst of a 200 person meeting.

The importance of the subject revolves around a potential degradation of the regulatory and administrative planning process and degradation now being undertaken by the political activities of the proponents of the method. Their resorting to political means appears to stem from the frustration inherent in the subject's history; where the lining proposal has been made and investigated by impartial observers it has been rejected.

In order for me to avoid any taint of partiality and in order to forestall or further avoid any immersion into the morass of name calling, I propose that you extend an invitation to myself and a representative of Southwest Tank Liners (perhaps Mr. Bob Meecham) to appear together before the Board whereby the pros and cons of the lining people's proposals may be presented and the Board members will have an opportunity to direct their questions toward clarification and understanding.

It is my belief that only such a face-to-face presentation will suffice to expose the fundamental differences that are apparent in this matter. The importance of that exposure arises from the present situation where a formidable financial and political smoke screen is being drawn about a potentially dangerous situation and, as such, the potential for that danger should be recognized with enough clarity to enable the Board to make its own rational decision.

Although I have been both legally and orally challenged on my expressed public opinions, I can assure you I anticipate no gain from my stand, even if successful. In spite of the negative potential I am driven by the pride and ethics of a Registered Engineer to try to make sure that facts are available for decision makers to utilize rather than to be blinded by hidden political maneuvers.

I recognize the short time available until acceptance time voting is required for the regulations. Therefore, I put myself at your disposal and suggest telephone arrangements be made to hold the two party presentation.

Yours truly,

Howard Robbins
President

HR/mah

cy SF ~~1. ECA~~ 2. HS

22-D

JOOR MANUFACTURING, INC.
1189 INDUSTRIAL AVENUE • ESCONDIDO, CALIFORNIA 92025
TANKS • PRESSURE VESSELS • CONTAINERS • CUSTOM STEEL FABRICATION
Phone (619) 745-0971

January 11, 1985

State Water Resources Control Board
Paul R. Bonderson Building
P. O. Box 100
Sacramento, CA 95801

Attention: H. Springer

Subject: Comments to Proposed Underground Tank Regulations
Dated December 28, 1984

Gentlemen:

Enclosed are several pages of comments to the subject Proposed Regulations.

As you know, I am vitally interested in the promulgation of meaningful, clear regulations in keeping with the intent of the enacted legislation. As such, I have taken the time and expended the resources to provide meaningful comments to the regulations. If the reasoning behind a comment or a suggested change is not apparent, please contact me for clarification.

Yours truly,

Howard Robbins, P.E.
President

HR/mah

Received DTS
JAN 15 1985

COMMENTS TO STATE WATER RESOURCES CONTROL BOARD

PROPOSED UNDERGROUND TANK REGULATIONS DATED DECEMBER 28, 1984

The following comments are keyed to the appropriate section numbers in the proposed Regulations. In order to avoid ambiguity, page numbers have been included in double parentheses, (( )).

Section 2631,(3)(p) ((3.10))

The "sticking" of tanks for determining liquid level is a problem associated primarily with non-metallic tanks where the gauge stick has been known to penetrate the tank wall. Sticking has also been an anecdotal problem in steel tanks filled with fluid where frequent use of the stick has the potential of ultimately wearing through the tank bottom. Sticking is not a problem for steel tanks in the secondary containment area where it is done on an infrequent basis and is to be used to monitor events that are not expected over long periods of time. Since water is required to cause stick corrosion and since the accumulation of water in the secondary containment is one of the failures being tested, for it appears engineeringly unsound to require doubler plates in the annulus of a steel tank, it is suggested that the subject paragraph be rewritten as follows:

Sticking the annular space of a double-wall, non-metallic underground storage tank, as a monitoring method, shall not be allowed unless a strike plate or other approved device used to protect the non-metallic underground storage tank is located directly under the monitoring opening.

Section 2633,(3) ((3.23a))

The paragraph states: "The membrane lining shall meet the requirements set forth in sub-section 2631 (j)(3) of this article." Those requirements are design requirements for the elastomer material to be used. It appears that consistency with other equipment installation testing requirements would mandate a test procedure for installed membranes to assure that the installation was accomplished in a leak-tight satisfactory fashion. A simple test of water filling and monitoring for 24 hours would serve that purpose. It is suggested that this paragraph be rewritten to incorporate an installation testing requirement.

Section 2633 (g) ((3.26))

This paragraph addresses the monitoring and provision of pressurized piping systems when installed in an underground storage tank system. No mention is made of the ancillary piping such as

vents, vapor recovery, gauging and others to be expected in such installations. It is unclear as to whether the intent is to permit the use of all piping without secondary containment, if a pressurized delivery pipe is used, or whether all piping except the pressurized delivery pipe must be secondarily protected. Further, no specific mention appears to be made of suction delivery systems including those ancillary and secondary piping systems.

Section 2635 (b)(1) ((3.38))

With reference to Paragraph 4 on page 3.40 of this same section, it is evident that corrosion resistant tanks are desired for underground installation. It is therefore suggested that Section 2635(b) be rewritten as follows:

Primary containers and double-wall underground storage tanks shall be constructed of corrosion resistant materials and shall be designed and constructed to comply with all of the following:

Section 2643 (c) ((4.35))

The term "pressure drop" is normally used to describe a pressure decrease in a dynamic or flowing system. It is more descriptive and much clearer to refer to a negative pressure change in a container as a pressure loss. It is suggested that the word drop be replaced by the word loss in all cases.

Section 2644 (6) ((4.47))

Same as above, i.e. replace the word drop with the word loss.

Section 2661 (B) ((6.4))

The last sentence of the paragraph should be rewritten to read "....underground storage tanks that have any of the following defects after the special inspector has sounded the tank shall not be certified or returned to service:"

Section 2661 (B)(i) ((6.5))

This paragraph reads: "An underground storage tank which has an open seam or split longer than three inches". That sentence is inconsistent with paragraph (v) ((6.6)) which reads, "Any failure or opening within six inches of any seam or weld".

It is recommended that Paragraph (v) be eliminated since all possible failures can be covered by Paragraph (i) as rewritten. It

is suggested that Paragraph (i) be rewritten as follows: "An underground storage tank which has any failure or opening within six inches of any seam or weld or any split longer than three inches."

Section 2661 (B)(3)(d) ((6.7))

The usual repair purpose of lining a tank is to cure a "serious corrosion" problem which has manifested itself as a leak resulting in an unauthorized discharge. (If lining is being installed as a prophylactic measure it is not classified as a repair and does not fall under this classification.) It follows that a serious corrosion problem always exists when there is a leak and the existence of a leak is prima facie evidence of the existence of a serious corrosion problem. Exceptions can exist where there might be a stick perforation hole in a non-metallic tank or damage caused during installation or handling in which case the serious corrosion connotation is not applicable. It is suggested that Paragraph (d) be rewritten as follows:

It shall be demonstrated to the satisfaction of the local agency based on one of the tests in (c) above that the failure mechanism was not one of corrosion and that a corrosion problem does not exist. If a serious corrosion problem exists an interior lining repair may be allowed by the agency if it can be demonstrated that new or additional corrosion protection will halt or significantly minimize future corrosion and that the existing corrosion does not threaten the structural integrity or containment ability of the underground storage tank.

Section 2662 (b) ((6.8))

It is requested that the second sentence of this paragraph be eliminated. The entire permitting system for underground storage of hazardous materials depends on the use of Listed equipment, materials and procedures. The installation on non-Listed, or non-certified repair methods and/or materials, particularly where there is evidence of tank failure, marks a glaring inconsistency. Would non-Listed new tanks be permitted?

In addition to the above, there have been Listings and certifications available for many, many years, to anyone undertaking a lining venture. In view of the potential danger, liability and inconsistancies, it is impossible to justify the use of unlisted, uncertified and unknown methods of repair in damaged systems.

Section 2663 (a) ((6.10))

Justification for the use of interior lining on leaking underground tanks has been that the tanks will be economically restored to safe usable condition. That justification can only be validated.

by appropriate testing.

The failure mechanism resulting in corrosion leaks in ferrous metal underground tanks is virtually always due to the presence of external, wet, electrolytic conditions (water). The existence of electrolytes (water) around the tank which causes the corrosion also causes the application of crushing pressures on the tank. The magnitude of these pressures is a function of the depth of the water which surrounds the tank and is usually a function of the depth of the water table and the depth of tank burial. The existence of these forces has been recognized in the requirements for anti-flotation arrangements in all fire codes.

In the case of post-installation testing of underground tanks, lines, as well as new tanks, all equipment should be expected to pass a test requirement to verify the ability to withstand the forces encountered in normal service.

In the case of a lined, repaired underground tank, it can be expected that the liquid leading to the initial corrosion will eventually return and provide the forces leading to a potential crushing of the tank. It is readily seen that the magnitude of these pressure forces are a function of the depth at which the tank is buried which, for a given location, leads to a determination of the height of water to be expected around the tank. For those reasons, charts have been prepared providing reasonable vacuum test pressure levels to be used on underground tanks to simulate water forces. These values are used in some fashion for <u>all</u> Listed tank testing.

It is pointed out that the value of 5.3" Hg used in the guideline text appears to have been taken out of context from a U.L. document. In testing new tank designs, per the U.L., a prototype vacuum test is always performed to verify the ability of the tank to withstand the expected external hydrostatic forces. These tests usually last for an hour or more and demonstrate the long-term, non-creep stability of the tank. In addition, a safety margin is required to assure the safety of human beings operating around the tank during testing or installation. That safety margin is provided in the form of the 5.3" Hg added on top of the test vacuum pressure and held for one minute.

It is recommended that the last sentence of Section 2663 (a) ((6.10)) be deleted since the inclusion of such a sentence must inevitably result in derision being directed toward the entire Section. The so-called "technology" and "accepted engineering practices" is a diversion and a deliberate obfuscation. The "technology" under discussion is manifested in vacuum pumps that have been available for 50 years on sewage pumping trucks, gasoline pumping trucks and commercial vacuum cleaners. It is strongly suspected that organizations capable of lining underground tanks have these vacuum pumps already in their possession since they are usually efficient in removing residual sand from sandblasting and residual gunk from the bottom of the tank, among other things. Any self priming

water or other liquid suction pump can provide the required levels of vacuum.

It is suggested that this paragraph, Section 2663 (a) be rewritten as follows:

After any repair the primary container shall be demonstrated to be capable of containing the stored hazardous substance, under its normal environment by satisfactorily passing the underground storage tank test as described in Section 2643 or Article 4F or this subchapter. The underground storage tank shall also be vacuum tested at a vacuum equivalent to the average depth of water occuring at the mid-point of the height of the buried tank.

For reference, typical test values would be as follows:

Depth to tank bottom	Diameter of tank	Vacuum
Feet	Feet	" Hg.
10	8	5.3
11	8	6.2
12	9.5	6.4
13	10	7.1
14	12	7.1
15	12	7.5

The safety factor value of 5.3" Hg is added to the Vacuum values above and the total held for one minute.

Subchapter 16 ~~1. RG~~
#23 2. HS

VALLEY OIL DISTRIBUTING CO.

845 ABBOTT STREET • P. O. BOX 569 • SALINAS, CALIFORNIA 93901 • (408) 422-1406

October 12, 1984

Mr. Harold Singer
Division of Technical Services
P. O. Box 100
Sacramento, California 95801

Dear Mr. Singer,

I am writing you in regards to the regulations prepared by the Water Resources Control Board. Implementing the recent passage of the Underground storage of Hazardous substances act. In my opinion the regulations should not go beyond the jurisdiction granted to the Board by Bill #1362 or its intent.

The financial impact of $100,000.00 to $200,000.00 clean up of a historical release would be too much for my company to handle. I by no means want myself or anyone to contaminate our water supply. However the six month compliance is unrealistic and does not allow time for alternatives to be considered or even implemented. Thank you for your time. I am very concerned about the compliance time on this matter and most of all the survival of my Company.

Sincerely,

RAYMOND C. INMAN INC., dba
VALLEY OIL DISTRIBUTING COMPANY

Raymond C. Inman

Raymond C. Inman,
President

RCI/rh

Received DTS
OCT 15 1984

Subchapter 16
#24

#5

Dixie Enterprises
Fred Y. Bunch
1100 So. Gateway Drive
Madera, CA 93637

October 15, 1984

State Water Resources Control Board
1416 9th Street
Sacramento, CA 95814

Dear Sirs:

This letter concerns the Underground Tank Storage of Hazardous Substances draft which I recently was made aware of.

I believe this is much needed legislation. However, the proposed draft regulations are totally unacceptable.

Certainly you don't believe that we service station owners who have underground storage tanks would continue to put products in a tank that we know has a leak. Agriculture is being exempted, this is ridiculous! Some of the large farming operations have greater underground storage than many, many service stations and they have little or no control over inventory. What's good for the goose is good for the gander. If one underground tank is to be monitored, then they should all be.

The vadose monitoring wells will only compound the pollution problem by providing a path by which contamination can enter the underground water system. If you must drill monitoring test wells, for heaven's sake, don't drill them into the underground water system.

The cost of the proposed shafts, approximately $15,000 per unit, will put probably 50 to 70 percent of the service stations in California out of business (as most have a minimum of 3 tanks). Surely, there is a monitoring system which is less complex and less costly. A simple pressure test will determine if a tank is leaking, and done on a semi-annual or annual basis would be far more feasible. This coupled with daily inventory control would certainly be sufficient.

Received DTS
OCT 17 1984

If these regulations are accepted as the draft is written, I and thousands of other small service station business owners and operators (the back-bone of California) will be immediately forced out of business. What will this accomplish for the economy of our state? All phases of business will be directly affected.

As a long-time California resident, I am deeply concerned with the condition of our environment and am willing to do my share to protect it. However, losing my business because of unnecessary prohibitive costs, when there are less costly ways, certainly seems a terrible price to pay for these ill-conceived regulations.

Thank you for your attention.

Respectfully,

Fred Y. Bunch

Fred Y. Bunch
Dixie Enterprises
1100 So. Gateway
Madera, CA 93637

Hearing scheduled:

October 23, 1984, 9:00 a.m.

State Water Resources Board
1416 9th St.
Sacramento, CA 95814

cc/lmb

Copies to: Senator Ken Maddy
Representative Jim Costa

Subchapter 16
25

~~1 ECA~~
~~2 RJ~~
~~MF~~
STEVE F
& HAROLD

WESTERN REGION

NACE

NATIONAL ASSOCIATION OF CORROSION ENGINEERS

P. O. Box 218340
Houston, Texas 77218
(713) 492-0535

1983-1984 OFFICERS

CHAIRMAN
T. D. HARRINGTON
Marin Municipal Water District
220 Nellen Avenue
Corte Madera, California 94925
(415) 924-4600

VICE CHAIRMAN
D. G. BIVENS
Corrosion Technology, Inc.
P.O. Box 4069
Downey, California 90241
(213) 633-8433

SECRETARY
A. F. HOOPER
San Diego Gas & Electric Company
P.O. Box 1831
San Diego, California 92112
(619) 232-4252

TREASURER
M. L. "DOC" BOWDEN
Koppers Company, Inc.
5900 S. Eastern Ave., Suite 104
Commerce, California 90040
(213) 726-8666

DIRECTOR
W. R. STEAD
General Telephone Company
675 Bonita Avenue
Pomona, California 91767
(714) 865-4741

DIRECTOR-AT-LARGE
D. M. WATERS
Waters Consultants
7807 Convoy Court, Suite 110
San Diego, California 92111
(619) 565-6580

TRUSTEE-AT-LARGE
H. G. CORBETT
2330 Bella Vista Drive
Santa Barbara, California 93108
(805) 969-3038

ARIZONA SECTION
C. R. BARNEY
Harco Corporation
5643 52nd Avenue
Phoenix, Arizona 85301
(602) 269-7641

INLAND EMPIRE SECTION
G. A. JENSEN
Battelle Northwest
Richland, Washington 99352
(509) 376-9024

INTERMOUNTAIN SECTION
W. J. DIRK
Exxon Nuclear Company
P.O. Box 2800
Idaho Falls, Idaho 83401
(208) 526-3078

LOS ANGELES SECTION
R. D. SHIPLEY
Corrosion Technology, Inc.
P.O. Box 4069
Downey, California 90241
(213) 633-8433

PORTLAND SECTION
W. D. HARRIS
Northwest Natural Gas Company
123 N.W. Flanders Street
Portland, Oregon 97209
(503) 226-4211

PUGET SOUND SECTION
R. Z. JACKSON
CH2M Hill
1500 114th Avenue SE
Bellevue, Washington 98004
(206) 453-5000

SAN DIEGO SECTION
J. F. WATERS
Waters Consultants
7807 Convoy Court, Suite 110
San Diego, California 92111
(619) 565-6580

SAN FRANCISCO BAY AREA SECTION
R. D. MCCRIGHT
Lawrence Livermore Laboratory -
P.O. Box 808
Livermore, California 94550
(415) 422-7051

SAN JOAQUIN VALLEY SECTION
SHARON AIHARA
Farwest Corrosion Control Company
9835 Kitty Lane
Oakland, California 94614
(415) 430-1091

September 22, 1984

Mr. Edward C. Anton, Chief
Division of Technical Services
State Water Resources Control Board
P. O. Box 100
Sacramento, CA 95801

Dear Mr. Anton

In response to your letter to me dated May 2, 1984, wherein you requested copies of guidelines that NACE is developing. Attached is the latest draft of the Proposed NACE Standard Recommended Practice, "Control of External Corrosion on Metallic Buried, Partially Buried, or Submerged Liquid Storage Systems".

It is anticipated that this final draft will be accepted in its present form at the Technical Practices Committee Meeting at Denver, Colorado, September 24th. I am sending you this latest draft for your review prior to your "deadline for comments of October 23, 1984". This recommended practice, when adopted should be used in conjunction with NACE Standard RP-01-69 (revised 1983) Control of External Corrosion on Underground or Submerged Metallic Piping Systems.

There is concern within the corrosion community that there will be corrosion occurring within the annular space between the walls of dual wall steel tanks that will be very difficult to control.

As stated in the NACE proposed standard (4.1.1) Cathodic Protection should be installed on <u>all</u> buried metal tanks. It has been well established by NACE and industry over the last 30 years that buried single wall steel tank systems with Cathodic Protection properly installed and properly maintained <u>do not leak</u>. Example: attached are the requirements of the City of Hawthorne, California for corrosion protection of underground pipe, fittings and tanks (HFD Standard #2).

Received DTS
OCT 12 1984

For 30 years the City of Hawthorne has required that all buried steel tanks have a Cathodic Protection System designed, installed, and maintained by a qualified Corrosion Engineer. Subsequently, there have not been any leaking tanks except that as the city boundaries have expanded and the newly annexed areas contained existing buried tanks that were not installed under the strict guidelines of the City of Hawthorne. The leaks that have occurred have been in those tanks not properly protected with coatings and anodes. It is evident that strict enforcement of the codes is necessary for effective corrosion control.

The 1979 edition of the Uniform Fire Code (Sec. 79.213) required corrosion protection in soil resistivity of 10,000 ohm-centimeteres or less and the 1982 edition requires corrosion protection for "all underground tanks and piping" (Sec. 79.603).

The City of Hawthorne follows the NACE recommendations and has required that all buried metal tanks be coated <u>and</u> cathodically protected. Tanks installed in this manner will last indefinitely, corrosion free.

Your proposed section 2640(b) of subchapter 16 states: "the objectives of the monitoring program for existing underground storage tanks are: to determine if unauthorized releases are occurring or have occurred in the past and to detect unauthorized releases that occur in the future before ground water is affected".

Hydrostatic or pressure tests will determine if a leak has or is occurring. To prevent a future leak in steel tanks cathodic protection should be applied to provide a minimum pipe or tank to soil potential of -850 millivolts referenced to a copper-copper sulfate half cell. Enclosed is a modification to the proposed monitoring systems for your consideration.

Numerous wells drilled around the existing tanks as is being proposed could create multiple routes for contaminates to enter underground water and therefore, should be avoided whenever possible. When other indicators suggest a possible leak and a verification is required the well should be drilled to 50' or less unless the bottom of the tank is over 35' deep. This will help prevent contamination of the lower ground water.

One last comment on the definition of Motor Vehicle Fuel Tank. It should read: "a tank that contains a product which is intended to be used primarily to fuel motor vehicles" and stationary engines that burn motor vehicle fuel. Most utilities and emergency services have many stationary engines that power their standby emergency generators.

William R. Stead

WILLIAM R. STEAD, P.E.
Corrosion Engineer

Attachments
CC Harold Singer
NACE
WRS:OL

DRAFT

TABLE 4 - Coating System Characteristics Related to Design, Construction, and Inspection

Design and Construction Factor	Recommended Test Methods(1) (See Table 1 for Reference)
Yard storage, weathering	6
Yard storage, penetration under load	6
Handling resistance, abrasion	6
Handling resistance, impact	6
Flexibility	6
Driving ability (resistance to sliding abrasion)	4, 6
Cathodic protection	1, 7
Nondestructive testing and inspection	3
Backfill resistance	4, 9
Resistance to thermal effects	5
Suitability of field repairs	2, 7, 8

(1) No specific criteria are available. Comparative tests subject to evaluation are recommended on the basis of any tolerable compensating measures that may be required.

DRAFT

TABLE 5 - Current Approval Process of Coatings for Underground Storage Tanks

1. Canadian Regulatory Body - a Canadian regulatory authority examines the suitability of coating materials for protection of underground steel storage tanks for flammable liquids against the deteriorating effects of burial in the majority of soils. This examination includes the following tests:

   (a) Cathodic Disbonding Test
   (b) Resistance to Aromatic Fuel
   (c) Resistance to Alkali
   (d) Resistance to Acid
   (e) Impact Test
   (f) Salt Spray

2. Steel Tank Institute's S.T.I.-P_3 System - The Steel Tank Institute (Northbrook, Illinois) examines coating materials for use with the S.T.I.-P_3 tank system. This examination includes the following tests:

   (a) Gasoline Immersion Test
   (b) Fuel Oil Immersion Test
   (c) Above Ground Weathering Test
   (d) Buried Tank Test
   (e) Cathodic Disbonding Test
   (f) Solvent Wipe Test
   (g) Gasohol Immersion Test
   (h) Alcohol Immersion Test

PLUMBING FLOOR PLAN

1/4" = 1'-0"

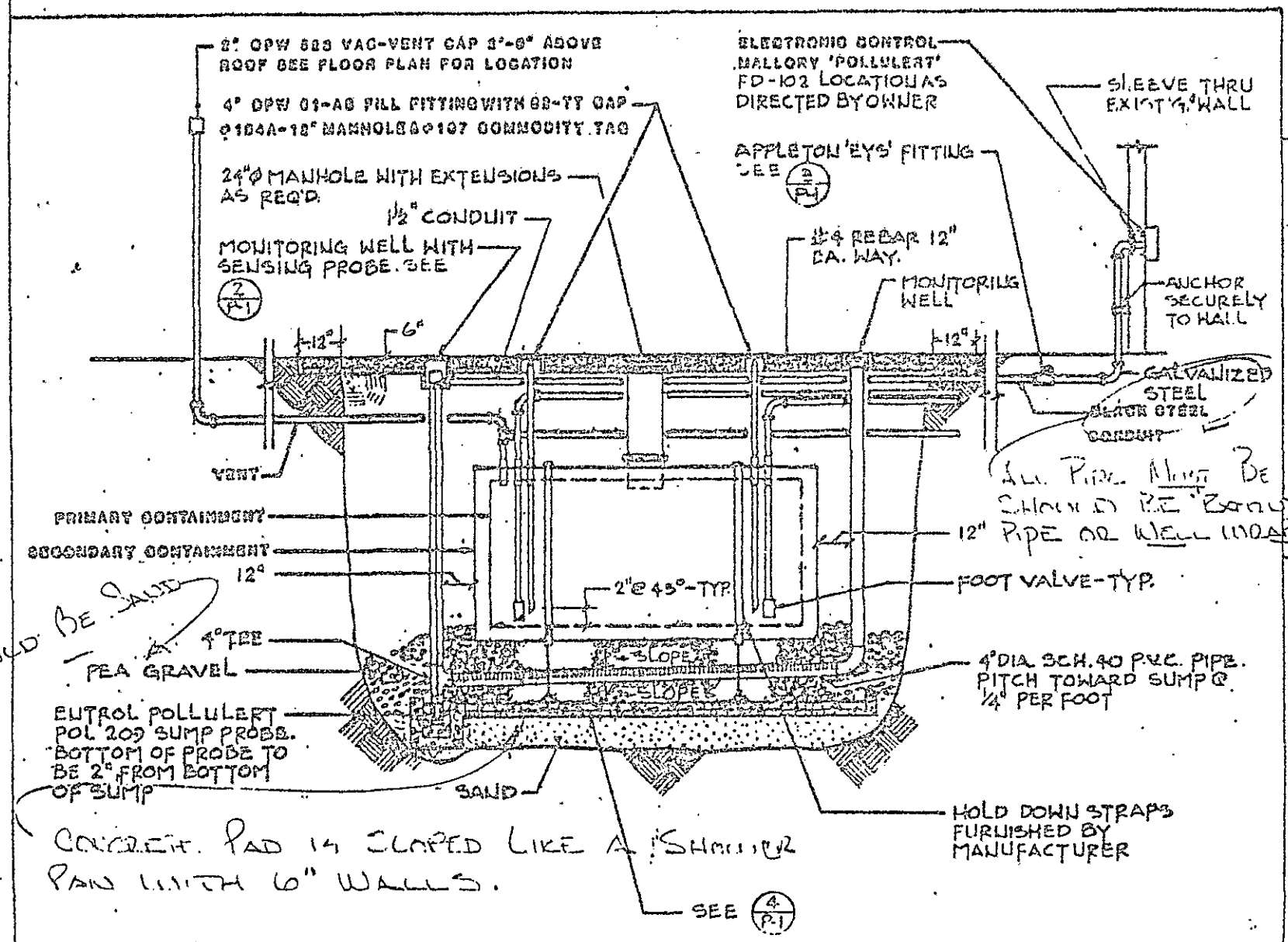

DIESEL FUEL STORAGE TANK DETAIL	N.T.S	1	APPE

CITY OF HAWTHORNE

FIRE DEPARTMENT

"CITY OF GOOD NEIGHBORS"

4455 West 126th Street · Hawthorne, California 90250

(213) 970-7968

REQUIREMENTS FOR PROTECTION AGAINST CORROSION FOR UNDERGROUND PIPE, FITTINGS AND TANKS CONTAINING FLAMMABLE LIQUIDS

Section 1 - Scope

The following standard provides an approved method of conformance to the Corrosion Protection requirements of Sections 79.603 and 79.702 of the Uniform Fire Code, 1982 Edition.

Section 2 - Plans and Specifications

A copy of the plans and specifications shall be submitted by the installer of the Cathodic Protection System to the Bureau of Fire Prevention for approval prior to any Cathodic Protection System being installed.

A letter from the company applying the coating shall be submitted to the Bureau of Fire Prevention stating the tank(s) were coated to the City of Hawthorne Fire Department specifications and listing the serial number(s) of the tank(s).

Section 3 - Test Required Upon Completion of Installation

Upon completion of a Cathodic Protection System, tests shall be made by the installer to determine that it is functioning in accordance with Section 5 of this article. Test data shall be submitted in writing to the Bureau of Fire Prevention.

Section 4 - Pipe, Fittings and Tank Coating Specifications

A. Tanks - Tanks to be used for the underground storage of flammable liquids shall be coated in accordance with the following specifications.

1. All tanks shall be cleaned of all moisture, oil, grease, paint burrs, scale, projections and welding residue, by cleaning with a non-oily solvent, filing, wire brushing, sandblasting or other methods necessary to produce a clean surface.

2. Apply one coat of coal tar primer.

3. Apply first coat of coal tar enamel.

4. Apply first wrap of fiberglass.

5. Apply second coat of coal tar enamel.

6. Apply second wrap of fiberglass.

7. Apply third coat of coal tar enamel.

8. All tanks shall be tested with an approved holiday detector, operating at approximately 6,000 volts, any defects found in the coating shall be repaired prior to the setting of the tank. If this test is not made in the presence of the inspector, verification shall be made in writing to the Bureau of Fire Prevention that the test has been made indicating who made the test, the date of testing and the results of the test.

9. PLASTIC ... (JOOR) FIBERGLASS CLAD TANKS ARE ACCEPTED [illegible]

IF GALVANIZED PIPE AND FITTINGS ARE USED IN CONJUNCTION WITH THE STORAGE OF FLAMMABLE LIQUIDS THEY SHALL BE COATED IN ACCORDANCE WITH EITHER OF THE TWO (2) FOLLOWING SPECIFICATIONS.

B. Pipe and Fittings - Coal Tar Method

1. Pipe and fittings shall be cleaned as specified in Item 1 of the "Tank Specifications".

2. Apply one coat of coal tar primer.

3. Apply first coat of coal tar enamel.

4. Apply one wrap of 20 mil thick fiberglass material with one-fourth inch overlap. Glass fiber shall be dry when applied.

5. Apply a second coat of coal tar enamel sufficient to completely saturate the fiberglass wrap. The total thickness of the pipe coating shall be not less than one-eighth inch.

6. All pipe and fittings shall be tested using a holiday detector as specified in Item 8 of the "Tank Specifications".

C. Pipe and Fittings - Tape Method

1. Pipe and fittings shall be cleaned as specified in Item 1 of the "Tank Specifications".

2. Pipe shall be wrapped with a one-half inch overlap of polyvinylchloride of polyethylene pressure sensitive tape, 20 mils thick, to accomplish a uniform tightly adhered coating with no wrinkles, voids, puckers or breaks.

3. All fittings and field joints shall be wrapped with a butyl molding tape, to a thickness of 3/32 inches and double wrapped with a one-fourth inch overlap of 10 or 12 mil thick polyvinylchloride or polyetheylene, pressure sensitive tape.

4. All pipe and fittings shall be tested using a holiday detector as specified in Item 8 of the "Tank Specifications".

D. Pipe and Fittings - Optional Method - A. O. Smith Red Thread Pipe and Fittings may be used under the following requirements.

1. If steel or galvanized pipe is used at the turbine, then electric isolation between the turbine and pipe and fittings should be achieved by dielectric fittings or insulating flange sets. The ferrous metal pipe should be coated and wrapped in accordance with the ordinance and protected with sacrificial anodes. The dispenser end of the product line should be isolated, coated and protected.

2. If brass or copper pipe is used to join the turbine and or dispenser to the nonmetallic pipe, no protection or coating should be required.

3. No flexible connectors of any kind will be allowed.

Section 5 - Cathodic Protection

A. Cathodic protection is required for all ferrous pipe, fittings and tanks used for underground storage and handling of flammable liquids when soil resistivity is 10,000 ohm-cm or less measured with an Associated Research Model 263 obtained by a licensed engineer specializing in the field of Corrosion engineering and submitted in writing to the Bureau of Fire Prevention.

B. When Cathodic Protection is required by Section 5 of this Article, a sacrificial anode type system using magnesium anodes shall be designed using a current density of one-half milliampere per square foot of tank and pipe surface and to provide a uniform pipe-to-soil potential change as referenced to a copper-copper half cell of 200 millivolts more negative, instantaneous, and 300 millivolts total change, more negative after polarization. A minimum pipe to soil potential of -850 millivolts referenced to a copper sulphate half-cell shall be maintained. The open circuit potential of the anodes referenced to a copper sulphate half cell shall be -1600 M.V. or more. The system shall be designed to provide a minimum of 10 years of protection.

C. The sacrificial anode type system shall have lead wires from all anodes and tanks having a shunt, resistor, etc., terminating in a suitable yard box. All lead wires shall be identified with a metal stamped identification marker.

NACE TECH. COMM. REPORT
OCT 1981

NFPA-30

The National Fire Protection Association, Inc. (NFPA) has issued a standard, ANSI/NFPA 30, Nov. 20, 1980, which serves as the guideline for most federal, state, and local ordinances. It is the longest standard on the subject and covers new installations only.

Comment: Paragraph 2-3.4.1 which indicates gravel can be used as a backfill around steel tanks may not be applicable at all installation sites. Paragraph 2-3.3 establishes 10,000 ohm-cm soil resistivity of the site as the criteria for the level below which protection is required. In Part B of Paragraph 2-3.3, no standards for coating or criteria for protection are set forth. The intent to provide corrosion control is clear, however, only trained corrosion personnel would be able to interpret what is to be done and how it might be accomplished. This standard has merit but leaves serious gaps for misunderstanding, i.e., the use of coatings without cathodic protection.

UFC

The Uniform Fire Code as produced by the Western Fire Chiefs Association recognizes the hazards of corrosion on underground fuel storage systems. This code is used by a number of states in the western United States. In general, it parallels the NFPA Standard using much of the same language.

Comment: Many of the same mistakes noted in the NFPA-30 Standard are found in this code. For example, Section 79.213 does not require protection over 10,000 ohms-cm soils. However, it does provide for annual monitoring and proper isolation when cathodic protection is used.

Foreign Codes (Canada UL)

The Canadian UL Code has been accepted by the Canadian Government and covers design, specifications, installation, testing, and monitoring for a complete corrosion control system on underground fuel storage systems. It comes close to being an effective code regarding corrosion technology.

Standard for Safety—Steel Underground Tanks for Flammable and Combustible Liquids, Seventh Edition, 1976 and approved as American National Standards Institute (ANSI)[9] B137.1 - 1976.

Comment: This standard does not address the need for corrosion protection. Only a brief mention of protection is made in paragraph 4.1 and paragraph 11.1.

Steel Tank Institute

The Steel Tank Institute STI-p3 tank design, as manufactured by licensees of the Institute, requires approved high-dielectric coatings over Steel Structures Painting Council (SSPC)[10] sandblasted and seal-welded vessel with sacrificial anodes and electrical isolation of the vessel from the piping system.

Comment: This standard recognizes the problem of corrosion with relation to the tank only and does not consider the fuel system piping which is a part of the entire structure.

American Petroleum Institute

The American Petroleum Institute Publication #1615, November, 1979, recognizes the problem of corrosion. The document covers fiberglass reinforced plastic (FRP) as well as steel tanks with cathodic protection, both coated and uncoated, and considers monitoring of the protection to determine whether the cathodic protection system is operating continually. Their corrosion control methods include impressed current cathodic protection on bare tanks and piping as well as sacrificial anode cathodic protection for coated tanks and piping with proper isolation.

Comment: This standard approaches a degree of better understanding and better engineering principles, however, it has several points that should be corrected. Its reference to 10,000 ohm-cm resistivity as a criteria for the level below which protection is required is an arbitrary figure that may not be technically correct. This standard also uses NFPA-30 as a guideline.

(9) American National Standards Institute (ANSI), 1430 Broadway, New York, NY 10018.

(10) Steel Structures Painting Council (SSPC), 4400 Fifth Ave, Pittsburgh, PA 15213.

MODIFICATION TO PROPOSED MONITORING SYSTEM
FOR EXISTING BURIED METALLIC FUEL TANKS
Ref. Uniform Fire Code 1979 Edition

In High Resistivity Soil Above 10,000 Ω/cm	In Low Resistivity Soil Below 10,000 Ω/cm	All Tanks Installed with Cathodic Protection
1. Tank buried less than 10 years.	1. Tank buried less than 5 years.	1. Tank buried with cathodic protection system installed and maintained by approved Corrosion Engineer or Corrosion Specialist.
2. Hydrostatic or pressure test.	2. Hydrostatic or pressure test.	2. Re-test hydrostatic or pressure every 3 years, or less.
3. Install appropriate cathodic protection system and maintain on annual basis.	3. Install appropriate cathodic protection system and maintain on annual basis.	3. Record and report annually "fuel in" vs "fuel out" to substantiate no leaks.
4. Re-test hydrostatic or pressure every 3 years, or less.	4. Re-test hydrostatic or pressure every 3 years, or less.	
5. Record and report annually "fuel in" vs "fuel out" to substantiate no leaks.	5. Record and report annually "fuel in" vs "fuel out" to substantiate no leaks.	

This approach would eliminate the need to drill many wells that will have the potential to carry contaminates into the ground water.

This plan will substantially reduce the cost of the program, which will be passed on to the consumer by industry.

W. R. Stead, September 1984

DRAFT

8.5.2.2 Wiring to rectifiers shall comply with local and national electrical codes and requirements of the utility supplying power. An external disconnect switch on AC wiring should be provided. Rectifier case shall be properly grounded.

8.5.2.3 Impressed current anodes can be buried vertically, horizontally, or in deep holes as indicated in construction specifications. Backfill material should be placed to ensure that there are no voids around anodes. Care should be exercised during backfilling to avoid damage to the anode and wire.

8.5.2.4 The conductor (negative lead wire) to the structure should be connected as in Paragraph 8.6. Conductor connections to the rectifier must be mechanically secure and electrically conductive. Before the power source is energized, it must be verified that the negative conductor is connected to the structure to be protected and that the positive conductor is connected to the anodes. After the direct current power source has been energized, suitable measurements should be made to verify that these connections are correct.

8.5.2.5 Underground splices on header cable (positive lead wire) to the groundbed should be kept to a minimum. Connections between header cable and conductors from anodes should be mechanically secure and electrically conductive. If buried or submerged, these connections must be sealed to prevent moisture penetration so that electrical isolation from the environment is ensured.

8.5.2.6 Care must be taken when installing direct burial cable to the anodes (positive lead wire) to avoid damage to insulation. Sufficient slack should be left to avoid strain on all wires. Backfill material around the cable should be free of rocks and foreign matter that might cause damage to the wire insulation when wire is installed in trench. Cable can be installed by plowing if proper precautions are taken.

DRAFT

8.5.2.7 If insulation integrity on the buried or submerged header cable (positive lead wire), including splices, is not maintained, this cable will fail from electrolytic corrosion.

8.6 Corrosion Control Test Stations, Connections, and Bonds (see Paragraph 7.1.2.6)

8.6.1 Installation Provisions

8.6.1.1 The structure and test lead wires should be clean, dry, and free of foreign materials at points of connection when the connections are made. Connections of test lead wires to the structure must be installed so they will remain mechanically secure and electrically conductive.

8.6.1.2 Attention must be given to the manner of installing test lead wires for corrosion control testing to avoid damaging the piping or tank at the point of attachment.

8.6.1.3 All test lead wire attachments and all bared test lead wires should be coated with an electrically insulating material. If the structure is coated, the insulating material should be compatible with the coating and wire insulation.

8.6.1.4 Conductors should be color coded or otherwise permanently identified. Wire should be installed with slack. Damage to insulation should be avoided, but repairs should be made if damage occurs.

8.7 Insulating Devices

8.7.1 Inspection and electrical measurements should be made to ensure that electrical isolation is adequate.

DRAFT

SECTION 9: CONTROL OF INTERFERENCE CURRENTS

9.1 Introduction

9.1.1 The purpose of this section is to recommend practices for the detection and control of interference currents. The mechanism and detrimental effects of interference currents are described.

9.2 Mechanism of Interference Current Corrosion (Stray Current Corrosion)

9.2.1 Interference current corrosion on buried or submerged metallic structures differs from other causes of corrosion damage in that the direct current, which causes the corrosion, has a source foreign to the affected structure. Usually, the affected structure draws the interfering current through the electrolyte from a direct current source not metallically bonded to the affected structure.

9.2.1.1 The detrimental effects of interference currents usually occur at locations where currents leave the affected structure and enter the electrolyte.

9.2.1.2 Coatings may become disbonded at the area where voltage gradients in the electrolyte force current onto the affected structure. This interference effect, in itself, is not considered damaging to non-amphoteric metals. However, as the coating becomes disbonded, more metal will be exposed. This can increase the demand for cathodic protection current and may create shielding problems.

9.2.2 The severity of corrosion (metal loss) resulting from interference currents depends on several factors:

9.2.2.1 Separation and routing of the interfering and affected structures and location of the interfering current source.

9.2.2.2 Magnitude and density of the current.

DRAFT

9.2.2.3 Quality of the coating, or absence of a coating on the structures involved.

9.2.2.4 Presence and location of mechanical joints having high electrical resistance.

9.2.3 Sources of Interference Currents

9.2.3.1 Constant current: These sources have essentially constant direct current output, for example, cathodic protection rectifiers and thermoelectric generators.

9.2.3.2 Fluctuating current: These sources have a fluctuating direct current output, for example, direct current electrified railway systems, coal mine haulage systems and pumps, welding machines, direct current power systems, and telluric currents.

9.3 Detection of Interference Currents

9.3.1 During corrosion control surveys, personnel should be alert for electrical or physical observations which could indicate interference from a neighboring source.

9.3.1.1 Structure-to-soil potential changes on the affected structure caused by the foreign direct current source.

9.3.1.2 Localized pitting in areas near or immediately adjacent to a foreign structure.

9.3.1.3 Earth potential gradient

SECTION 10: OPERATION AND MAINTENANCE OF CATHODIC PROTECTION SYSTEMS

10.1 Introduction

DRAFT

10.1.1 The purpose of this section is to recommend procedures and practices for energizing and maintaining continuous, effective, and efficient operation of cathodic protection systems.

10.1.1.1 Electrical measurements and inspections are necessary to determine that protection has been established according to applicable criteria and that each part of the cathodic protection system is operating properly. Conditions which affect protection are subject to change with time. Corresponding changes may be required in the cathodic protection system to maintain protection. Periodic measurements and inspection are necessary to detect changes in the cathodic protection system. Conditions may exist where operating experience indicates that testing and inspections should be made more frequently than recommended herein.

10.1.1.2 Care should be exercised in selecting the location, number, and type of electrical measurements used to determine the adequacy of cathodic protection.

10.2 A survey should be conducted after each cathodic protection system is energized to determine if it is satisfying applicable criteria and operating efficiently. This survey should include one or more of the following types of measurements:

10.2.1 Structure-to-soil potential (see Section 6.3)

10.2.2 Anode current (see Section 6.3.1.6)

10.2.3 Structure-to-structure potential

10.2.4 Piping to tank isolation if protected separately

10.3 Annual tests to ensure the effectiveness of cathodic protection are suggested. (The electrical measurements used in the tests may include one or more of the measurements listed in Section 10.2.)

DRAFT

10.4 Inspection and tests of cathodic protection facilities should be made to ensure their proper operation and maintenance as follows:

10.4.1 All sources of impressed current should be checked at intervals of two months. Evidence of proper functioning may be current output, normal power consumption, a signal indicating normal operation, or satisfactory electrical state of the protected structure.

10.4.2 All impressed current protective facilities should be inspected annually as part of a preventive maintenance program to minimize in-service failure. Inspections should include a check for electrical shorts, ground connections, meter accuracy, efficiency, and circuit resistance.

10.4.3 The effectiveness of insulating fittings, continuity bonds, and insulators should be evaluated during the periodic surveys. This can be accomplished by on-site inspection or by evaluating corrosion test data.

10.5 If the structure being protected is uncovered, it should be examined for evidence of corrosion and, if coated, for condition of the coating.

10.6 The test equipment used for obtaining each electrical value should be of an appropriate type. Instruments and related equipment should be maintained in good operating condition and checked annually for accuracy.

10.7 Remedial measures should be taken where periodic tests and inspections indicate that protection is no longer adequate according to applicable criteria. These measures may include:

10.7.1 Repair, replacement, or adjustment of cathodic protection system components.

10.7.2 Providing supplementary facilities where additional protection is necessary.

DRAFT

10.7.3 Thorough cleaning and proper coating of bare structures if such measures are required to attain cathodic protection.

10.7.4 Repair, replacement, or adjustment of continuity and interference bonds.

10.7.5 Elimination of accidental metallic contacts.

10.7.6 Repair of defective insulating devices.

SECTION 11: CORROSION CONTROL RECORDS

11.1 Introduction

11.1.1 The purpose of this section is to describe corrosion control records which will document in a clear, concise, workable manner the data pertinent to the design, installation, operation, maintenance, and effectiveness of corrosion control measures.

11.2 Relative to the determination of the need of corrosion control, the following should be recorded:

11.2.1 Corrosion history, including records of leaks, breaks, and replacements.

11.2.2 Structure and coating condition observed when a buried structure is exposed.

11.3 Relative to structure design, the following should be recorded:

11.3.1 Coating material and application specifications.

11.3.2 Design and location of insulating devices, test leads and other test facilities, and details of other special corrosion control measures taken.

DRAFT

11.4 Relative to the design of corrosion control facilities, the following should be recorded:

11.4.1 Results of current requirement tests, where made.

11.4.2 Results of soil resistivity at site, where made.

11.5 Relative to the installation of corrosion control facilities, the following should be recorded:

11.5.1 Installation of cathodic protection facilities

11.5.1.1 Impressed current systems

11.5.1.1.1 Location and date placed in service

11.5.1.1.2 Number, type, size, depth, backfill, and spacing of anodes

11.5.1.1.3 Specifications of rectifier or other energy source

11.5.1.2 Galvanic anode systems

11.5.1.2.1 Location and date placed in service

11.5.1.2.2 Number, type, size, backfill, and spacing of anodes unless part of factory installed system

11.6 A record of surveys, inspections, and tests set forth in Sections 6, 7, 9, and 10 should be maintained to demonstrate that applicable criteria for cathodic protection have been satisfied.

11.7 Relative to the maintenance of corrosion control facilities, the following information should be recorded:

DRAFT

11.7.1 Maintenance of cathodic protection facilities

11.7.1.1 Repair of rectifiers and other DC power sources.

11.7.1.2 Repair or replacement of anodes, connections, and cable.

11.7.2 Maintenance, repair, and replacement of coating, insulating devices, test leads, and other test apparatus.

11.8 Records sufficient to demonstrate the evaluation of the need for and the effectiveness of corrosion control measures should be retained as long as the facility involved remains in service. Other related corrosion control records should be retained for a period that satisfies individual company needs.

DRAFT

TABLE 1 - INDEX OF COATINGS REFERENCES

Reference Number		Title	Source (1)
1	a	Standard Test Method for Dielectric Breakdown Voltage and Dielectric Strength of Solid Electrical Insulating Materials at Commercial Power Frequencies	ASTM D 149-81
	b	Standard Test Methods for D.C. Resistance of Conductance of Insulating Materials	ASTM D 257-78
2	a	Standard Test Method for Water Penetration into Pipeline Coatings	ASTM G 9-77
	b	Standard Test Method for Moisture Vapor Permeability of Organic Coating Films	ASTM D 1653-72
	c	Standard Test Method for Water Vapor Transmission on Materials in Sheet Form	ASTM E 96-66
	d	Standard Recommended Practice for Dynamic Measurement of Water Vapor Transmission	ASTM E 398-70
3	a	Standard Method for Nondestructive Measurement of Film Thickness of Pipeline Coatings on Steel	ASTM G 12-77
	b	Standard Test Method for Holiday Detection in Pipeline Coatings	ASTM G 62-79
	c	Visual Standard for Surfaces of New Steel Centrifugally Blast Cleaned, with Steel Grit or Shot	NACE - TM-01-75
	d	Visual Standard for Surfaces of New Steel Air-Blast Cleaned with Sand Abrasive	NACE - TM-01-70
	e	"Underground Corrosion," National Bureau of Standards, Circular 579, April 1957, pp. 180-186.	National Technical Information Service
4		Standard Test Method for Adhesion of Organic Coatings	ASTM D 2197-68 (1979)
5	a	Standard Method for Thermal Evaluation of Rigid Electrical Insulating Materials	ASTM D 2304-79
	b	Standard Test Method for Coatings Designed to be Resistant to Elevated Temperatures During Their Service Life	ASTM D 2485-68 (1973)

DRAFT

TABLE 1 - INDEX OF COATINGS REFERENCES (con't)

Reference Number		Title	Source (1)
	c	Standard Test Method for Rubber-Deterioration in in an Air Oven	ASTM D 573-78
6	a	Standard Test Method for Rockwell Hardness of Plastics and Electrical Insulating Materials	ASTM D 785-65 (1981)
	b	Standard Test Method for Penetration of Bituminous Materials	ASTM D 5-73 (1978)
	c	Standard Test Method for Penetration Resistance of Pipeline Coatings (Blunt Rod)	ASTM G 17-77
	d	Standard Test Method for Rubber Property-Durometer Hardness	ASTM D 2240-81
	e	Standard Test Method for Abrasion Resistance of Pipeline Coatings (Rolling Drum Method)	ASTM G 6-77
	f	Standard Test Method for Abrasion Resistance of Coatings of Paint, Varnish, Lacquer and Related Products with the Air Blast Abrasion Tester	ASTM D 658-70
	g	Standard Test Method for Abrasion Resistance of Coatings of Paint, Varnish, Lacquer and Related Products by the Falling Sand Method	ASTM D 968-76
	h	Standard Test Method for Effects of Outdoor Weathering on Pipeline Coatings	ASTM G 11-79
	i	Standard Test Method for Bendability of Pipeline Coatings	ASTM G 10-77
	j	Standard Test Method for Initial Tear Resistance to Plastic Film and Sheeting	ASTM D 1004-76
	k	Standard Test Method for Impact Resistance of Pipeline Coatings (Limestone Drop Test)	ASTM G 13-77
	l	Standard Test Method for Impact Resistance of Pipeline Coatings (Falling Weight Test)	ASTM G 14-77
7	a	Standard Test Method for Cathodic Disbonding of Pipeline Coatings	ASTM G 8-79

DRAFT

TABLE 1 - INDEX OF COATINGS REFERENCES (con't)

Reference Number		Title	Source (1)
	b	Standard Test Method for Disbonding Characteristics of Pipeline Coatings by Direct Soil Burial	ASTM G 19-77
	c	Method for Cathodic Disbonding of Pipeline Coatings Subjected to Elevated or Cyclic Temperatures	ASTM G 42-80
8	a	Standard Test Methods for Joints, Fittings, and Patches in Coated Pipelines	ASTM G 18-77
	b	Standard Method for Pipeline Coatings and Patch Materials Evaluating	ASTM G 55-77
9	a	"Underground Corrosion," National Bureau of Standards Circular 579, April 1957, pp. 134-135 (Out of print, but reproduced as PB-168350 Underground Corrosion)	National Technical Information Service
	b	Standard Test Method for Shrinkage Factor of Soils	ASTM D 427-61 (1974)
	c	Standard Recommended Practice for Determining Resistance of Synthetic Polymeric Materials to Fungi	ASTM G 21-70 (1980)
	d	Test Method for Mildew Resistance of Plastics by Mixed Culture Method, Agar Medium, Federal Test Standard No. 406, Method 6091	General Services Administration
	e	Military Specification and Test Method for Fungus Resistance, MIL-F-8261A (USAF)	U.S. Naval Publication
10	a	Standard Test Method for Resistance of Plastics to Chemical Reagents	ASTM D 543-67 (1968)
	b	Test Method for Resistance of Plastics to Chemical Reagents, Federal Test Standard No. 406 Method 7011	General Services Administration

DRAFT

TABLE 1 - INDEX OF COATINGS REFERENCES (con't)

Reference Number	Title	Source (1)
c	Standard Test Method of Chemical Resistance of Pipeline Coatings	ASTM G 20-77

(1) Addresses of Sources:

American Society for Testing & Materials (ASTM), 1916 Race St., Philadelphia, PA 19103

National Technical Information Service (NTIS), Springfield, VA 22161

General Services Administration, Business Service Center, Washington, DC 20025

National Association of Corrosion Engineers (NACE) P.O. Box 218340, Houston, TX 77218

U.S. Naval Publications and Forms Center, 5801 Tabor Road, Philadelphia, PA 19120

DRAFT

TABLE 2 - Coating System Characteristics and Related Test References

Coating Characteristic	Recommended Test Methods (1) (See Table I for Reference)
Dielectric strength	1
Moisture transfer and penetration	2
Application features	3
Adhesion	4
Resistance to holiday development	5
Mechanical damage resistance	6
Cathodic disbonding	7
Repair	8
Retention of physical properties	9
Service (contents) exposure	10

(1) No specific criteria are available. Comparative tests subject to evaluation are recommended as supplementary information only.

DRAFT

TABLE 3 - Coating System Characteristics Relative to Environmental Conditions[1]

Environmental Factor	Recommended Test Methods[2] (See Table 1 for Reference)
General underground exposure with cathodic protection	1, 7
Resistance to water penetration and its effect on choice of coating thickness	2, 3
Resistance to penetration by stones in backfill	6
Soil stress	4, 9
Resistance to specific liquids not normally encountered in virgin soil	10
Resistance to thermal effects	5
Suitability of supplementary materials for field repairs	2, 7, 8
Resistance to microorganisms	9

(1) NOTE: Apply only those factors pertinent to the installation.

(2) No specific criteria are available. Comparative tests subject to evaluation are recommended as supplementary information only.

technical practices committee

NATIONAL ASSOCIATION OF CORROSION ENGINEERS

STATE BOARD

T-10A-14

NOT APPROVED: This draft of a proposed NACE Standard is duplicated in this form for committee use only and cannot be duplicated in any form for publication or for any other use except committee work.

DRAFT

PROPOSED NACE STANDARD

RECOMMENDED PRACTICE FOR

CONTROL OF EXTERNAL CORROSION ON METALLIC BURIED, PARTIALLY BURIED, OR SUBMERGED LIQUID STORAGE SYSTEMS

Draft #1: April, 1983

Draft #2: September, 1983

Draft #3: Revised by Task Group at CORROSION/84 - April, 1984

Draft #4: Edited by Headquarters and Issued to Task Group Chairman for Review - June, 1984

National Association of Corrosion Engineers
P.O. Box 218340
Houston, Texas 77218
713/492-0535

DRAFT

This National Association of Corrosion Engineers Standard implies a consensus of those individual members substantially concerned with this document, its scope, and provisions. This Standard is intended to aid the manufacturer, the consumer, and the general public. Its acceptance does not in any respect preclude anyone, whether he has adopted the Standard or not, from manufacturing, marketing, purchasing, or using products, processes, or procedures not in conformance with this Standard. NACE Standards are subject to periodic review, and the user is cautioned to obtain the latest edition.

CAUTIONARY NOTICE: This NACE Standard may be revised or withdrawn at any time without prior notice. NACE requires that action be taken to reaffirm, revise, or withdraw this Standard no later than two years from the date of initial publication. Purchasers of NACE Standards may receive current information on all Standards by writing to NACE Publications Department, P.O. Box 218340, Houston, Texas 77218.

DRAFT

The National Association of Corrosion Engineers issues this Standard in conformity to the best current technology regarding the specific subject. This Standard represents minimum requirements and should in no way be interpreted as a restriction on the use of better procedures or materials. Neither is this Standard intended to apply in all cases relating to the subject. Unpredictable circumstances may negate the usefulness of this Standard in specific instances.

Nothing contained in this Standard of the National Association of Corrosion Engineers is to be construed as granting any right, by implication or otherwise, for manufacture, sale, or use in connection with any method, apparatus, or product covered by Letters Patent, nor as indemnifying or protecting anyone against liability for infringement of Letters Patent.

DRAFT

FOREWORD

This NACE Standard Recommended Practice was prepared by NACE Task Group T-10A-14, composed of corrosion consultants, corrosion engineers from oil and gas transmission companies, gas distribution companies, power companies, communications companies, the National Bureau of Standards, the Department of Transportation, the American Water Works Association; representatives of steel tank manufacturers, coating applicators and manufacturers; and others concerned with corrosion control. Task Group T-10A-14 is a component of Unit Committee T-10A on Cathodic Protection, and this Standard is issued by NACE under the auspices of Group Committee T-10 on Underground Corrosion.

The purpose of this Recommended Practice is to present procedures and practices for achieving effective control of external corrosion on partially buried or submerged ferrous metal liquid storage systems. These recommendations are also applicable to many other buried or submerged metallic structures. The Recommended Practice describes the use of electrically insulating coatings, electrical isolation, and cathodic protection as corrosion control methods. It contains specific provisions for the application of cathodic protection to existing bare, existing coated, and new storage systems. This Recommended Practice does not include corrosion control methods based on chemical control of the environment or the use of electrically conductive coatings.

DRAFT

SECTION 1: GENERAL

1.1 This Recommended Practice presents accepted practices for the control of external corrosion on partially buried or submerged ferrous metal liquid storage systems under the following headings:

Section 2:	Definitions
Section 3:	Determination of Need for Corrosion Control
Section 4:	Design Considerations
Section 5:	Coatings
Section 6:	Criteria for Cathodic Protection
Section 7:	Design of Cathodic Protection Systems
Section 8:	Installation of Cathodic Protection Systems
Section 9:	Control of Interference Current
Section 10:	Operation and Maintenance of Cathodic Protection Systems
Section 11:	Corrosion Control Records

1.2 This Recommended Practice is intended to serve as a guide for establishing minimum requirements for control of corrosion on systems that are buried, partially buried, submerged, or in contact with the soil.

1.3 This Recommended Practice does not designate practices for every specific situation because the complexity of some environmental conditions in which systems are buried precludes standardizing of corrosion control practices. However, because of the localized nature of liquid storage facilities, as opposed to cross country pipelines, and the nature of factory engineered tank protection that is available, some standardization is possible.

1.4 This Recommended Practice does not include corrosion control methods based on chemical control of the environment or the use of electrically conductive coatings.

1.5 The provisions of this Recommended Practice should be applied under the direction of competent persons, who, by reason of knowledge of the physical sciences and the principles of engineering and mathematics acquired by professional education and related practical experience, are qualified to engage in the practice of corrosion control on buried metallic systems. Such persons may be registered professional engineers, persons recognized as being qualified, or accredited as corrosion specialists by the Na-

DRAFT

tional Association of Corrosion Engineers if their professional activities include suitable experience in corrosion control on metallic systems. Factory engineered systems for storage tanks may be considered to be competently designed.

1.6 Deviation from the Recommended Practice may be warranted in specific situations provided the corrosion engineer in charge can demonstrate that the objectives expressed in the Recommended Practice have been achieved.

SECTION 2: DEFINITIONS[1]

Anode: An electrode at which oxidation of its surface or some component of the solution is occurring. Antonym: cathode.

Cathode: The electrode of an electrolytic cell at which reduction occurs.

Cathodic protection: A technique to prevent the corrosion of a metal surface by making that surface the cathode of an electrochemical cell.

Continuity bond: A metallic connection that provides electrical continuity.

Corrosion: The deterioration of a material, usually a metal, because of a reaction with its environment.

Current density: The current per unit area.

Electrical isolation: The condition of being electrically separated from other metallic structures or the environment.

---

[1] Definitions in this section reflect the common usage among practicing corrosion control personnel. In many cases, in the interests of brevity and practicality, the strict scientific definitions have been abbreviated or paraphrased.

DRAFT

Electro-osmotic effect: Passage of a charged particle through a membrane under the influence of a voltage. Soil may act as the membrane.

Electrode potential: The potential of an electrode as measured against a reference electrode. The electrode potential does not include any loss of potential in the solution due to current passing to or from the electrodes, i.e., it represents the reversible work required to move a unit charge from the electrode surface through the solution to the reference electrode.

Electrolyte: A chemical substance or mixture, usually liquid, containing ions that migrate in an electric field. For the purpose of this Recommended Practice, electrolyte refers to the soil or liquid adjacent to and in contact with a buried or submerged metallic structure, including the moisture and other chemicals contained therein.

Foreign structure: Any structure that is not an intended part of the system in question.

Galvanic anode: A metal which, because of its relative position in the galvanic series, provides sacrificial protection to metal or metals that are more noble in the series, when coupled in an electrolyte. These anodes are the current source in one type of cathodic protection.

Galvanic Series: A list of metals and alloys arranged according to their relative potentials in a given environment.

Half cell reference electrode: See Reference electrode.

Holiday: A discontinuity of coating that exposes the metal surface to the environment.

Impressed current: Direct current supplied by a power source external to the electrode system.

Insulating coating system: All components of the protective coating, the sum of which provides effective electrical insulation of the coated structure.

DRAFT

Interference bond: A metallic connection designed to control electrical current interchange between metallic systems.

IR drop: The voltage across a resistance in accordance with Ohm's Law.

Isolation: See Electrical isolation.

Polarization: The deviation from the open circuit potential of an electrode resulting from the passage of current. In this Recommended Practice, polarization is considered to be the change of potential of a metal surface resulting from the passage of current directly to or from an electrode.

Reference electrode: A device whose open circuit potential is constant under similar conditions of measurement.

Sacrificial protection: Reduction or prevention of corrosion of a metal in an electrolyte by galvanically coupling it to a more anodic metal.

Stray current: Current flowing through paths other than the intended circuit.

Stray current corrosion: Corrosion resulting from direct current flow through paths other than the intended circuit.

Structure-to-electrolyte voltage: (also structure-to-soil potential or pipe-to-soil potential) The voltage difference between a buried metallic structure and the electrolyte which is measured with a reference electrode in contact with the electrolyte.

Structure-to-structure voltage: (also structure-to-structure potential) The difference in voltage between metallic structures in a common electrolyte.

Voltage: An electromotive force, or a difference in electrode potentials expressed in volts.

DRAFT

SECTION 3: DETERMINATION OF NEED FOR CORROSION CONTROL

3.1 Introduction

3.1.1 The purpose of this section is to recommend practices for determining when a metallic, buried, partially buried, or submerged liquid storage system requires corrosion control.

3.1.2 Metallic structures in contact with soil or water are subject to corrosion. Adequate corrosion control procedures shall be adopted to ensure metal integrity for safe and economical operation.

3.2 The decisions governing the need for corrosion control should be based on data obtained from code requirements, corrosion surveys, operating records, prior test results with similar systems in similar environments, and should be made after a study of the following items: (a) design and engineering specifications, (b) operating procedures, (c) safety and environmental protection requirements.

3.3 Environmental and Physical Factors to be Considered

3.3.1 Corrosion rate of the particular metallic piping and tank system in a specific environment. NOTE: These rates may change because of various construction conditions in adjacent and surrounding land.

3.3.2 Location of the installation as related to other facilities.

3.3.3 Stray direct current sources foreign to the system (See Section 9).

3.4 Cost Factors to be Considered

3.4.1 Direct costs of repair, replacement, and maintenance of corroded material.

3.4.2 Typical Contingent Costs of Corrosion:

DRAFT

3.4.2.1 Public liability claims

3.4.2.2 Property damage claims

3.4.2.3 Damage to natural facilities, such as municipal or irrigation water supplies, forests, parks, and scenic areas

3.4.2.4 Clean-up of product lost to surroundings

3.4.2.5 Facility shutdown and start-up costs

3.4.2.6 Cost of lost product

3.4.2.7 Loss of revenue through interruption of service

3.4.2.8 Loss of contracts or good will through interruption of service

3.4.3 Direct Costs of Corrosion Control

3.4.3.1 The costs for protecting buried or submerged metallic structures include the costs for complete or partial cathodic protection and for coatings supplemented with cathodic protection.

3.4.3.2 Other corrosion control costs can include the following:

3.4.3.2.1 Reconditioning and coating the piping system

3.4.3.2.2 Use of corrosion resistant materials

3.4.3.2.3 Use of selected backfill

3.4.3.2.4 Electrical isolation

DRAFT

3.4.3.2.5 Correction of conditions in or on the system that might accelerate corrosion

3.4.3.2.6 Power cost

3.4.3.2.7 System monitoring

SECTION 4: DESIGN CONSIDERATIONS

4.1 Introduction

4.1.1 The purpose of this section is to introduce accepted corrosion control practices into the design of buried, partially buried, or submerged storage systems. A person qualified to practice corrosion control should be consulted during all phases of design and construction (see Paragraph 1.5).

4.1.1.1 New liquid storage facilities: Corrosion control by coating supplemented with cathodic protection, or by some other proven method, shall be provided in the initial design and shall be maintained during the service life of the system, unless investigations indicate that corrosion control is not required.

4.1.1.2 Existing coated liquid storage facilities: Cathodic protection shall be provided and maintained on all existing coated systems, unless investigations indicate that cathodic protection is not required.

4.1.1.3 Existing bare liquid storage facilities: Studies shall be made to determine the extent and rate of corrosion on existing bare systems. When these studies indicate that corrosion will affect the safe or economic operation of the system, adequate corrosion control measures shall be used.

DRAFT

4.2 Electrical Isolation

4.2.1 Isolating devices consisting of flange assemblies, prefabricated insulating joints, unions, or couplings shall be installed where electrical isolation of the system is required to facilitate the application of corrosion control. These devices should be properly rated for temperature, pressure, dielectric strength, and product to be stored. Precautions must be observed in the installation and operation of isolating devices in combustible atmospheres.

4.2.2 All systems shall be installed so that they remain electrically isolated from all foreign underground metallic structures. These may include pipe stanchions, reinforcing steel, curb boxes, valve enclosures, wall sleeves, and anchor straps. Where practical, a 12 in. (30.5 cm) minimum separation shall be maintained between all buried metallic structures. Where it is impractical to achieve the recommended separation, insulating materials may be required between the structures to maintain electrical isolation. Cathodically protecting isolated anchor straps should be considered.

4.3 Electrical Continuity

4.3.1 Consideration shall be given to the electrical continuity of mechanical joints. Where the objective is to ensure electrical continuity, fittings manufactured for this purpose should be used or the mechanical joints should be bonded in an approved manner.

4.4 Coatings

4.4.1 New storage systems shall be coated in accordance with Section 5.

4.5 Cathodic Protection

4.5.1 Cathodic protection shall be provided for storage systems.

DRAFT

SECTION 5: COATINGS

5.1 Introduction

5.1.1 The purpose of this section is to recommend practices for testing, evaluation, and selecting coating systems for corrosion control and for handling, inspection, and installation of new liquid storage systems.

5.2 Testing, Evaluating, and Selecting Coating Systems

5.2.1 The function of a coating in corrosion control is to isolate the external surface of tanks from the environment and to reduce the current demand on the cathodic protection system.

5.2.1.1 Desirable characteristics of such coating systems include:

5.2.1.1.1 High dielectric resistance

5.2.1.1.2 Resistance to moisture transfer and penetration

5.2.1.1.3 Applicable with a minimum of defects

5.2.1.1.4 Good adhesion to metallic surfaces

5.2.1.1.5 Resistance to mechanical damage during handling, storage, and installation

5.2.1.1.6 Resistance to cathodic disbonding

5.2.1.1.7 Ease of repair

5.2.1.1.8 Retention of physical properties with time

DRAFT

5.2.1.1.9 Resistance to intermittent exposure to product being stored

5.2.1.2 Typical factors to consider when selecting a coating system include:

5.2.1.2.1 External environment

5.2.1.2.2 Operating conditions (i.e., temperature, contents)

5.2.1.2.3 Conditions during shipping, storage, construction, and installation

5.2.1.2.4 State of the art in storage tank coatings

5.2.1.2.5 Anticipated level of inspection and quality control during coating application

5.2.1.2.6 Availability

5.2.1.3 Surface preparation, application equipment, and application procedures shall be in accordance with recommendations of the coating manufacturer.

5.2.1.4 Information in this section is primarily by reference to other documents. Latest revisions must be used.

5.2.1.4.1 Table 1 is a listing of relevant coating test references. In this table, each document is given a reference number for convenient use thereafter.

5.2.1.4.2 Table 2 is a correlation of desirable coating characteristics (see 5.2.1.1) with appropriate references from Table 1.

DRAFT

5.2.1.4.3 Table 3 is a list of coating system characteristics related to environmental conditions containing suggested laboratory test references for various properties.

5.2.1.4.4 Table 4 is a list of coating system characteristics related to design, construction, and inspection, with appropriate suggested laboratory tests for evaluating these properties.

5.2.1.4.5 Table 5 is an outline of the test methods used by two coating approval organizations.

5.3 Handling, Inspection, and Installation

5.3.1 Handling

5.3.1.1 Damage to coating shall be minimized by careful handling and by using proper cradles and slings.

5.3.2 Inspection

5.3.2.1 Qualified personnel shall monitor and inspect each phase of the coating operation including surface preparation. Minimum quality control and inspection programs should be developed.

5.3.2.2 A coating shall be tested immediately before installation of the system by using appropriate holiday detectors or visual inspection. All coatings shall be inspected in such a manner as to show that it is acceptable and compatible with the total protection system. All visible coating damage shall be repaired.

5.3.3 Installation

5.3.3.1 The excavation shall be free from any material that may cause damage to the coating.

DRAFT

5.3.3.2 To prevent damage to the tank or coating, equipment for raising the tank shall be of adequate size to raise and lower the tank without dragging or dropping. Similar care shall be given to the piping.

5.3.3.3 If the tank is installed on a concrete slab, it shall be separated from the slab by at least 6 in. (15.2 cm) of sand or other approved homogeneous backfill.

5.3.3.4 Anchor straps and ground anchors, if required, shall be installed in such a manner that they do not damage the coating.

5.3.3.5 The backfill shall consist of clean sand or other selected fill that is free of organic material, rocks, debris, and other sharp objects.

5.3.3.6 The backfill shall be deposited carefully around the tank to a depth of at least 1 ft (30.5 cm) over the tank. Avoid damage to the coating, especially where tamping is required (See NFPA[2] 30 and state or local codes for depth of cover required).

SECTION 6: CRITERIA FOR CATHODIC PROTECTION

6.1 Introduction

6.1.1 The purpose of this section is to list criteria for cathodic protection which, when complied with either separately or collectively, will indicate that adequate cathodic protection of a metallic tank storage system has been achieved.

[2] National Fire Protection Association (NFPA), Quincy, MA.

DRAFT

6.2 General

6.2.1 The objective of using cathodic protection is to control the corrosion of metallic surfaces in contact with electrolytes.

6.2.2 The selection of a particular criterion for achieving the objective in 6.2.1 depends, in part, on past experience with similar structures and environments wherein the criterion has been used successfully.

6.2.3 The criteria in Section 6.3 have been developed through laboratory experiment or empirically determined by evaluating data obtained from successfully operated cathodic protection systems. It is not intended that persons responsible for corrosion control be limited to these criteria if it can be demonstrated by other means that the control of corrosion has been achieved.

6.2.4 Voltage measurements on liquid storage systems are to be made with the reference electrode located on the electrolyte surface as close as possible to the storage system. Such measurements on all other structures are to be made with the reference electrode positioned as close as possible to the surface of the structure being investigated. Consideration should be given to voltage (IR) drops other than those across the structure-electrolyte boundary, the presence of dissimilar metals, and the influence of other structures for valid interpretation of voltage measurements.

6.3 Criteria for Steel and Iron Structures

6.3.1 A negative (cathodic) voltage of at least 0.85 V as measured between the structure surface and a saturated copper-copper sulfate reference electrode contacting the electrolyte. Determination of this voltage is to be made with the protective current applied.

6.3.2 A minimum negative (cathodic) voltage shift of 300 mV, produced by the application of protective current. The voltage shift is measured between the structure surface and a stable reference electrode contacting the electrolyte. This criterion of voltage shift applies to structures not in contact with dissimilar metals.

DRAFT

6.3.3 A minimum negative (cathodic) polarization voltage shift of 100 mV measured between the structure surface and a stable reference electrode containing the electrolyte. This polarization voltage shift is to be determined by interrupting the protective current and measuring the polarization decay. When the current is initially interrupted, an immediate voltage shift will occur. The voltage reading after the immediate shift shall be used as the base reading from which to measure polarization decay.

6.4 Alternative Reference Electrodes

6.4.1 Other standard reference electrodes may be substituted for the saturated copper-copper sulfate reference electrodes. Three commonly used reference electrodes are listed below along with their voltage equivalent to -0.85 V vs a saturated copper-copper sulfate reference electrode:

6.4.1.1 Saturated KCl calomel reference electrode: -0.78 V

6.4.1.2 Silver-silver chloride reference electrode used in seawater: -0.80 V

6.4.1.3 Zinc reference electrode: + 0.25 V

BIBLIOGRAPHY FOR SECTION 6

Ewing, Scott P. "Potential Measurements for Determination of Cathodic Protection Requirements," Corrosion, Vol. 7, No. 12, p. 410 (1951).

Haycock, E. W. Corrosion, "Current Requirements for Cathodic Protection of Oil Well Casing," Vol. 13, No. 11, p. 767 (1957).

Kubit, R. W. "E Log I-Relationship to Polarization," National Association of Corrosion Engineers 24th Annual Conference, Preprint No. 20, 1968, National Association of Corrosion Engineers, Houston, TX.

DRAFT

Kuhn, R. J. "Criteria for Steel and Cast Iron," Cathodic Protection of Underground Pipelines Against Soil Corrosion, Proceedings American Petroleum Institute, (IV), Vol. 14, p. 153 (1953).

Pearson, J. M. Contributions of J. M. Pearson to Mitigation of Underground Corrosion, NACE Publication 56-12, National Association of Corrosion Engineers, 1956.

Pearson J. M. "Electrical Instruments and Measurements in Cathodic Protection," Corrosion, Vol. 3, No. 11, p. 549 (1947).

Recommended Practice for Cathodic Protection (NACE Publication 2M363). Materials Protection, Vol. 2, No. 10, p. 106 (1963).

Schwerdtfeger, W. J., O. N. McDorman. "Potential and Current Requirements for the Cathodic Protection of Steel in Soils," Journal Research, National Bureau of Standards, Vol. 47, p. 104 (1951) and Corrosion, Vol. 8, No. 11, p. 391 (1952).

"Underground Corrosion." National Bureau of Standards, Circular 579, pp. 180-186, April, 1957. (Available from Clearinghouse, US Dept. of Commerce, Springfield, VA 22151).

SECTION 7: DESIGN OF CATHODIC PROTECTION

7.1 Introduction

7.1.1 The purpose of this section is to recommend procedures for designing cathodic protection that will effectively control corrosion, accomplished by satisfying one or more of the criteria listed in Section 6 for the intended service life of the systems.

7.1.2 In the design of cathodic protection, the following items shall be included:

DRAFT

7.1.2.1 Recognition of hazardous conditions prevailing at the proposed installation site, and the selection and specification of materials and installation practices which will ensure the safe installation and operation of the cathodic protection system.

7.1.2.2 Specification of materials and installation practices to conform with applicable codes, e.g., National Electrical Manufacturers Association (NEMA) Standards and Recommended Practices of the National Association of Corrosion Engineers.

7.1.2.3 Selection and design of the cathodic protection system for optimum economy of installation, maintenance, and operation.

7.1.2.4 Selection and specification of materials and installation practices which will ensure dependable operation throughout the intended service life of the cathodic protection system.

7.1.2.5 Selection of a design to minimize excessive protective currents or earth potential gradients, which can detrimentally affect the tanks, piping, coating, or neighboring buried or submerged metallic structures.

7.1.2.6 Provision for monitoring the cathodic protection system operation.

7.2 Major objectives of cathodic protection system design are to:

7.2.1 Deliver and distribute sufficient current to the structure so that the criterion for cathodic protection is met.

7.2.2 Minimize the interference currents on neighboring underground structures.

7.2.3 Provide a design life of the anode system commensurate with the required life of the protected structure, or provide for periodic rehabilitation of the anode system.

7.2.4 Provide adequate allowance for anticipated changes in current requirements with time.

7.2.5 Place anodes where the possibility of physical disturbance or damage is minimal.

7.3 Information useful for design:

7.3.1 Specifications and practices

7.3.1.1 Site plan and system layout

7.3.1.2 Construction dates

7.3.1.3 Pipe, fittings, and other appurtenances

7.3.1.4 Coatings

7.3.1.5 Corrosion control test stations

7.3.1.6 Electrically isolating devices

7.3.1.7 Electrical bonds

7.3.2 Site conditions

7.3.2.1 Existing and proposed cathodic protection systems

7.3.2.2 Possible interference sources (impressed current)

7.3.2.3 Special environmental conditions

DRAFT

7.3.2.4 Neighboring buried metallic structures (including location, ownership, and corrosion control practices)

7.3.2.5 Structure accessibility

7.3.2.6 Power availability

7.3.2.7 Feasibility of electrical isolation from foreign structures

7.3.3 Field survey, corrosion test data, and operating experience:

7.3.3.1 Protective current requirements to meet applicable criteria

7.3.3.2 Electrical resistivity of the electrolyte

7.3.3.3 Electrical continuity of the system

7.3.3.4 Electrical isolation of the system

7.3.3.5 Coating integrity

7.3.3.6 Cumulative leak history of area

7.3.3.7 Deviation from construction specifications

7.3.3.8 Existence of stray current

7.3.3.9 Other maintenance and operating data

7.4 Types of Cathodic Protection Systems

7.4.1 Galvanic Anode Systems

7.4.1.1 Galvanic anodes can be of materials such as magnesium or zinc. These are installed either bare or packaged in a special

DRAFT

backfill. The anodes are connected to the system, either singly or in groups. Galvanic anodes are limited in current output by the system-to-anode driving voltage and the circuit resistance. Cathodic protection of large structures which are bare or poorly coated may not be economical if galvanic anodes are used.

7.4.2 Impressed Current Anode Systems

7.4.2.1 Impressed current anodes can be of materials such as graphite, high silicon cast iron, platinum, magnetite, or steel. These anodes are installed either bare or in special backfill material. They are connected with an insulated conductor either singly or in groups to the positive terminal of a direct current source. The structure is connected to the negative terminal of the direct current source.

7.5 Considerations that influence selection of the type of cathodic protection:

7.5.1 Current required

7.5.2 Soil conditions (resistivity, chemical composition, aeration, etc.)

7.5.3 The effects of cathodic protection interference currents on adjacent structures may limit the use of impressed current systems

7.5.4 Future development and extensions to the storage system

7.5.5 Costs of equipment, installation, operations, and maintenance

7.6 Factors determining anode current output, operating life, and efficiency:

7.6.1 Different anode materials have different rates of consumption when discharging an equivalent current density from the anode surface in a specific environment.

7.6.2 Output of the galvanic anode is governed by the circuit resistance and system-to-anode potential.

DRAFT

7.6.3 Galvanic anode performance in most soils can be improved by using special backfill material. Mixtures of gypsum, bentonite, and sodium sulfate are used most often.

7.6.4 The performance of impressed current anodes can be improved by the use of special backfill around the anodes. The most common materials are coke breeze and calcined petroleum coke.

7.6.5 In the design of a distributed impressed current anode system, the voltage and current attenuation along the anode connecting wire should be considered.

7.6.6 Gas generated by anodic reaction could increase the resistance of the impressed current groundbed. Suitable provisions should be made for venting.

7.6.7 Electro-osmotic effects could increase the resistance of the impressed current groundbed. Suitable provisions should be made to ensure adequate soil moisture around the anodes. Increasing the number of impressed current anodes can further reduce the electro-osmotic effect.

7.7 Design Drawings and Specifications

7.7.1 Suitable drawings should be prepared to designate the overall layout of the system to be protected and the location of significant items of structure hardware, corrosion control test stations, electrical bonds, electrical insulators, and neighboring buried or submerged metallic structures.

7.7.2 Layout drawings of each impressed current cathodic protection installation should be prepared showing the details and location of the cathodic protection system components. The location of the components shall be dimensioned with respect to the protected structure and to major physical landmarks.

7.7.3 The locations of galvanic anode installations should be recorded on drawings or in tabular form, with appropriate notes as to anode type, weight, spacing, depth, and backfill.

DRAFT

7.7.4 Specifications should be prepared for all materials and installation practices which are to be incorporated in construction of the cathodic protection system.

BIBLIOGRAPHY FOR SECTION 7

Dwight, H. B. "Calculation of Resistance to Ground," Electrical Engineering, Vol. 55, pp. 1319-28 (1936).

George, P. F., J. J. Newport, J. L. Nichols. "A High Potential Magnesium Anode," Corrosion, Vol. 12, No. 12, pp. 627t-633t (1966).

Peabody, A. W. Control of Pipeline Corrosion, National Association of Corrosion Engineers, Houston, Texas, pp. 94-100, 116-19, 1967.

Robinson, H. A., P. F. George. "Effect of Alloying and Impurity Elements in Magnesium Cast Anodes," Corrosion, Vol. 10, No. 6, p. 182 (1954).

Rudenberg, Reinhold. "Grounding Principles and Practices," Electrical Engineering, Vol. 64, pp. 1-13 (1945).

SECTION 8: INSTALLATION OF CATHODIC PROTECTION SYSTEMS

8.1 Introduction

8.1.1 The purpose of this section is to recommend procedures for the installation of cathodic protection systems that will protect the structure if design considerations recommended in Sections 4 and 7 have been followed.

8.2 Installation Specifications

8.2.1 All construction work performed on cathodic protection systems should be done in accordance with construction drawings and specifications.

DRAFT

8.2.2 All deviations from construction specifications should be noted on as-built drawings.

8.3 Installation Supervision

8.3.1 The installation of cathodic protection systems should be under the supervision of trained and qualified personnel to verify that the installation is made in strict accord with the drawings and specifications. Exceptions may be made only with the approval of qualified personnel responsible for corrosion control.

8.4 Galvanic Anodes

8.4.1 Inspection and Handling

8.4.1.1 Packaged anodes should be inspected to ensure integrity of the container. If individually packaged anodes are supplied in waterproof containers, that container must be removed before installation. Packaged anodes should be kept dry during storage.

8.4.1.2 Electrical continuity between anode and lead wire shall be tested.

8.4.2 Installing Anodes

8.4.2.1 Anodes shall be installed according to construction specifications.

8.4.2.2 Packaged galvanic anodes should be backfilled with compacted native soil. Where anodes and special chemical backfill are provided separately, anodes should be centered in special backfill

DRAFT

which should be compacted prior to backfilling with native soil. Care should be taken so that lead wires and connections are not damaged during backfill operations. Lead wires should have enough slack to avoid strain.

8.4.2.3 Where a ribbon type anode is used, it can be trenched or plowed in with or without special chemical backfill as specified, generally parallel to the structure to be protected.

8.5 Impressed Current Systems

8.5.1 The rectifier or other power source should be inspected to ensure that internal connections are mechanically secure and that no damage is present. Rating of the direct current power source should comply with construction specifications. Care should be exercised in handling and installing.

8.5.1.2 Impressed current anodes should be inspected for conformance to specified anode material and size and length of lead wire, and to ensure that cap is secure if used. Care should be exercised to avoid cracking or damaging anodes during handling and installation.

8.5.1.3 Lead wire should be carefully inspected for defects in insulation. Care should be taken to avoid damage to insulation on wire. Defects in the lead wire must be repaired, or the anode must be rejected.

8.5.1.4 Anode backfill material should conform to specifications.

8.5.2 Installation Provisions

8.5.2.1 Rectifier or other power source should be installed so that possibility of damage or vandalism is minimized.

25-C

NACE
NATIONAL ASSOCIATION OF CORROSION ENGINEERS
P.O. Box 218340
Houston, Texas 77218
(713) 492-0535
Telex 792310

WESTERN REGION

1984-1985 Officers

CHAIRMAN
D. G. BIVENS
Corrosion Technology, Inc.
P.O. Box 4069
Downey, California 90241
(213) 633-8433

VICE CHAIRMAN
A. F. HOOPER
San Diego Gas & Electric Company
P.O. Box 1831
San Diego, California 92112
(619) 232-4252

SECRETARY
M. L. "DOC" BOWDEN
Koppers Company, Inc.
P.O. Box 911041
Commerce, CA 90091
(213) 726-8666

TREASURER
P. D. SIMON
Norton Corrosion Limited
22327 89th Avenue
Woodinville, Washington 98072
(206) 483-1616

DIRECTOR
W. R. STEAD
General Telephone Company
675 Bonita Avenue
Pomona, California 91767
(714) 865-4741

DIRECTOR-AT-LARGE
D. M. WATERS
Waters Consultants
7807 Convoy Court, Suite 110
San Diego, California 92111
(619) 565-6580

TRUSTEE-AT-LARGE
H. G. CORBETT
2330 Bella Vista Drive
Santa Barbara, California 93108
(805) 969-3038

ARIZONA SECTION
C. R. BARNEY
Arizona Corrosion Control
5643 N. 52nd Avenue
Glendale, Arizona 85301
(602) 269-7641

INLAND IMPIRE SECTION
G. A. JENSEN
Battelle Northwest
Richland, Washington 99352
(509) 476-9024

INTERMOUNTAIN SECTION
N. W. WATTS
Northwest Pipeline Corporation
P.O. Box 1526
Salt Lake City, Utah 84110
(801) 584-6995

LOS ANGELES SECTION
WAYNE E. RISNER
Metropolitan Water District
700 North Moreno Avenue
LaVerne, California 91750
(714) 593-7474

PORTLAND SECTION
WARREN HARRIS
Northwest Natural Gas Company
One Pacific Square
220 N. W. Second Avenue
Portland, Oregon 97209
(503) 226-4211, Ext. 4402

PUGET SOUND SECTION
R. Z. JACKSON
CH2M Hill
1500 114th Avenue SE
Bellevue, Washington 98004
(206) 453-5000

SAN DIEGO SECTION
JOHN F. WATERS
Waters Consultants
7807 Convoy Court, Ste. 110
San Diego, California 92111
(619) 565-6580

SAN FRANCISCO BAY AREA SECTION
W. W. MERKEL
Pacific Gas & Electric Company
77 Beale Street, Room 2851
San Francisco, California 94106
(415) 781-4211, Ext. 1407

SAN JOAQUIN VALLEY SECTION
T. HELMS
Taft College
29 Emmons Park Place,
Taft, California 93268
(805) 763-5161

November 26, 1984

Mr. Edward C. Anton, Chief
Division of Technical Services
State Water Resources Control Board

Dear Mr. Anton

I have reviewed the staff report of the October 23rd public hearing, the revised draft of underground tank regulations dated November 9, 1984, and the review SWRCB regulations of November 9, 1984.

I wish to comment again on the fact that all steel tanks, plain or coated, should have cathodic protection as recommended by NACE, sti-P_3, UFC 1979 edition, and the attached publication, "Engineering and Safety Service", revised September 1984. I call your attention especially to the first and last paragraphs.

The review SWRCB regulations will give many tank owners a false sense of security if they are led to believe coated tanks will not corrode.

I again refer you to my letter to you dated September 22, 1984, paragraphs 4,5,6, and 7.

Sincerely

William R. Stead

WILLIAM R. STEAD, P.E.
Corrosion Engineer

Attachments
CC State Water Board
NACE
Harold Singer
WRS:mb

Engineering And Safety Service

AMERICAN INSURANCE SERVICES GROUP, INC.

85 John Street, New York, N.Y. 10038

Revised: *September, 1984* Special Interest Bulletin No. 81

William R. Stead, P.E.
Sr. Engineer
Corrosion & Protection

GTE

General Telephone Company
of California

675 E. Bonita Avenue
Pomona, CA 91767
714 865-4741

CATHODIC PROTECT NKS AND PIPING

The lack of cathodic prote tanks are available that are unpredictable product losses ry with cathodic protection, an ure of steel underground ta ting, and electrical isolation. leakage is usually detrimen system protects only the tank persons or both. piping. This system utilizes un- s which meet the requirements

The importance of cath Steel Underground Tanks for highlighted by requirements stible Liquids", UL58, and has al Regulations for gas transmission pipelines and gas utility distribution piping networks. In recent years, cathodic protection requirements for underground tanks have been added to NFPA 30, Flammable and Combustibile Liquids Code.

its protection system added to the tank. The protection system meets the requirements of the Steel Tank Institute "Standard No. sti-P_3, Specifications for sti-P_3 System of Corrosion Protection for Underground Steel Storage Tanks". This system uses sacrificial anodes.

Corrosion of metals, whether in the atmosphere, underwater or underground, is caused by the flow of electricity from one metal to another, or to a receptor of some kind, or from one part of the surface of one piece of metal to another part of the same metal where conditions encourage the flow of electricty. At any point where electric current flows away from the surface, corrosion will occur.

In order to halt corrosion, some means must be provided to reverse the current flow so it will flow onto the metal surface. A cathodic protection system does this and stops the corrosion process.

Cathodic protection is an electrical method of preventing corrosion. It is used for protecting metallic structures that are in contact with an electrolyte (corrodent), such as soil or water. In order to stop the corrosion process, direct current from a rectifier or sacrificial anode must be continuously supplied to the exposed surface of the structures. The current must also be properly distributed and the current density must be adequate for the particular conditions.

Cathodic protection systems which utilize sacrificial anodes are designed to have a certain minimum life based on tests made on the soil and an assumed exposed steel surface area. The principal metals used for anodes are zinc, aluminum, and magnesium.

Cathodic protection systems that use a rectifier to provide impressed current utilize anodes which also have a specific design life. The principal metals used for such anodes are graphite, silicon-iron, and platinum niobium.

Self-regulating, impressed current systems are available which are specifically adapted for the protection of service station tanks. The system can be used on new or existing installations without engineering surveys or soil resistivity tests. About 95% of such installations receive full protection and the remainder are close to full protection.

An annual survey should be made on all cathodic protection systems. These are electrical systems and require the same attention as any other electrical system. Unless there is an annual check on the system, there is no way to establish that needed protection is still being provided.

The application of protective coatings to metal surfaces to combat corrosion is accepted as good practice; however, what is not generally realized is that regardless of how good a coating may be initially, it will eventually develop flaws or "holidays", during handling, and installation operations, as well as from earth settlement after installation.

While flaws may be small and their number limited, intensified current flowing from these small area flaws can result in rapid penetration of the metal. In effect, installation of a coating on steel may result in leaks developing more quickly than for bare steel. This does not imply that coatings have limited value, but rather that they should be used in conjunction with cathodic protection unless a field survey by a certified cathodic protection engineer establishes that cathodic protection is not required.

3. HAZARDOUS SUBSTANCE SENSOR, EITHER QUALITATIVE OR QUANTITATIVE.
4. PRESSURE OR VACUUM LOSS DETECTOR (PRIMARILY USED WITH DOUBLE-WALL TANKS)

→ ALL PRIMARY CONTAINERS AND DOUBLE-WALL TANKS SHALL BE CORROSION-RESISTANT MATERIALS OR HAVE MONITORED CATHODIC PROTECTION SYSTEM.

25-E

~~1. ECA~~
~~2. RG~~
3. HS

NACE
NATIONAL ASSOCIATION OF CORROSION ENGINEERS
P.O. Box 218340
Houston, Texas 77218
(713) 492-0535
Telex 792310

WESTERN REGION

1984-1985 Officers

CHAIRMAN
D. G. BIVENS
Corrosion Technology, Inc.
P.O. Box 4069
Downey, California 90241
(213) 633-8433

VICE CHAIRMAN
A. F. HOOPER
San Diego Gas & Electric Company
P.O. Box 1831
San Diego, California 92112
(619) 232-4252

SECRETARY
M. L. "DOC" BOWDEN
Koppers Company, Inc.
P.O. Box 911041
Commerce, CA 90091
(213) 726-8666

TREASURER
P. D. SIMON
Norton Corrosion Limited
22327 89th Avenue
Woodinville, Washington 98072
(206) 483-1616

DIRECTOR
W. R. STEAD
General Telephone Company
675 Bonita Avenue
Pomona, California 91767
(714) 865-4741

DIRECTOR-AT-LARGE
D. M. WATERS
Waters Consultants
7807 Convoy Court, Suite 110
San Diego, California 92111
(619) 565-6580

TRUSTEE-AT-LARGE
H. G. CORBETT
2330 Bella Vista Drive
Santa Barbara, California 93108
(805) 969-3038

ARIZONA SECTION
C. R. BARNEY
Arizona Corrosion Control
5643 N. 52nd Avenue
Glendale, Arizona 85301
(602) 269-7641

INLAND IMPIRE SECTION
G. A. JENSEN
Battelle Northwest
Richland, Washington 99352
(509) 476-9024

INTERMOUNTAIN SECTION
N. W. WATTS
Northwest Pipeline Corporation
P.O. Box 1526
Salt Lake City, Utah 84110
(801) 584-6995

LOS ANGELES SECTION
WAYNE E. RISNER
Metropolitan Water District
700 North Moreno Avenue
LaVerne, California 91750
(714) 593-7474

PORTLAND SECTION
WARREN HARRIS
Northwest Natural Gas Company
One Pacific Square
220 N. W. Second Avenue
Portland, Oregon 97209
(503) 226-4211, Ext. 4402

PUGET SOUND SECTION
R. Z. JACKSON
CH2M Hill
1500 114th Avenue SE
Bellevue, Washington 98004
(206) 453-5000

SAN DIEGO SECTION
JOHN F. WATERS
Waters Consultants
7807 Convoy Court, Ste. 110
San Diego, California 92111
(619) 565-6580

SAN FRANCISCO BAY AREA SECTION
W. W. MERKEL
Pacific Gas & Electric Company
77 Beale Street, Room 2851
San Francisco, California 94106
(415) 781-4211, Ext. 1407

SAN JOAQUIN VALLEY SECTION
T. HELMS
Taft College
29 Emmons Park Place,
Taft, California 93268
(805) 763-5161

December 14, 1984

I don't think that we have any authority to call for cathodic protection.
Ed

Mr. Edward C. Anton, Chief
Division of Technical Services
State Water Resources Control Board

Dear Mr. Anton

Reference: My letter to you dated 11/26/84

After my presentation at the public hearing November 27, 1984, I discussed my presentation and the subject of cathodic protection with two of your staff members.

I have been told the Board and Staff may be reluctant to mandate cathodic protection for coated steel tanks.

The Department of Transportation (DOT) Regulations Title 49, Chapter 1, Section 192.455 states: "external corrosion control: buried or submerged piplines installed after July 31, 1971 must be protected against external corrosion including the following:

(1) It must have an external protective coating meeting the requirements of Section 192.461.

(2) It must have a cathodic protection system designed to protect the pipeline in its entirety in accordance with this subpart.."

Received DTS
DEC 20 1984

It seems reasonable to expect buried tanks for hazardous material to be protected at least as well as the pipelines.

I wanted to get these comments to you before the deadline of December 20, 1984, even though I have not received the latest draft from the November hearing.

Have a happy holiday season.

Sincerely,

William R. Stead

WILLIAM R. STEAD , P.E.
Corrosion Engineer

CC State Water Board
NACE
Harold Singer
WRS:KLW

25-F

NACE
NATIONAL ASSOCIATION OF CORROSION ENGINEERS
P.O. Box 218340
Houston, Texas 77218
(713) 492-0535
Telex 792310

WESTERN REGION

1984-1985 Officers

CHAIRMAN
D. G. BIVENS
Corrosion Technology, Inc.
P.O. Box 4069
Downey, California 90241
(213) 633-8433

VICE CHAIRMAN
A. F. HOOPER
San Diego Gas & Electric Company
P.O. Box 1831
San Diego, California 92112
(619) 232-4252

SECRETARY
M. L. "DOC" BOWDEN
Koppers Company, Inc.
P.O. Box 911041
Commerce, CA 90091
(213) 726-8666

TREASURER
P. D. SIMON
Norton Corrosion Limited
22327 89th Avenue
Woodinville, Washington 98072
(206) 483-1616

DIRECTOR
W. R. STEAD
General Telephone Company
675 Bonita Avenue
Pomona, California 91767
(714) 865-4741

DIRECTOR-AT-LARGE
D. M. WATERS
Waters Consultants
7807 Convoy Court, Suite 110
San Diego, California 92111
(619) 565-6580

TRUSTEE-AT-LARGE
H. G. CORBETT
2330 Bella Vista Drive
Santa Barbara, California 93108
(805) 969-3038

ARIZONA SECTION
C. R. BARNEY
Arizona Corrosion Control
5643 N. 52nd Avenue
Glendale, Arizona 85301
(602) 269-7641

INLAND IMPIRE SECTION
G. A. JENSEN
Battelle Northwest
Richland, Washington 99352
(509) 476-9024

INTERMOUNTAIN SECTION
N. W. WATTS
Northwest Pipeline Corporation
P.O. Box 1526
Salt Lake City, Utah 84110
(801) 584-6995

LOS ANGELES SECTION
WAYNE E. RISNER
Metropolitan Water District
700 North Moreno Avenue
LaVerne, California 91750
(714) 593-7474

PORTLAND SECTION
WARREN HARRIS
Northwest Natural Gas Company
One Pacific Square
220 N. W. Second Avenue
Portland, Oregon 97209
(503) 226-4211, Ext. 4402

PUGET SOUND SECTION
R. Z. JACKSON
CH2M Hill
1500 114th Avenue SE
Bellevue, Washington 98004
(206) 453-5000

SAN DIEGO SECTION
JOHN F. WATERS
Waters Consultants
7807 Convoy Court, Ste. 110
San Diego, California 92111
(619) 565-6580

SAN FRANCISCO BAY AREA SECTION
W. W. MERKEL
Pacific Gas & Electric Company
77 Beale Street, Room 2851
San Francisco, California 94106
(415) 781-4211, Ext. 1407

SAN JOAQUIN VALLEY SECTION
T. HELMS
Taft College
29 Emmons Park Place,
Taft, California 93268
(805) 763-5161

January 14, 1985

Mr. Edward C. Anton, Chief
Division of Technical Services
State Water Resources Control Board

Dear Mr. Anton

I have reviewed the revised draft of Underground Tank Regulations dated December 28, 1984, and wish to complement the board and the staff on the fine job both have done in developing these regulations. Especially so considering the pressure that has been applied for an early completion.

I wish to make some comments concerning minor changes and additions. Section 2633(b) line 5 " or steel clad with glass fibre...", could lead one to believe that cathodic protection was not required for these clad tanks. A reference to section 2635(b)(1) and (4) might be appropriate wherein the point is clarified very well.

Appendix I (page 10.21) referred to in section 2635 (b)(1) very definitely should include the three additional references I have listed below:

NACE RP -01-69 recommended practice for "control of external corrosion on underground or submerged metallic piping systems (revised 1983)."

NACE RP - - recommended practice for "control of external corrosion on metallic buried, partially buried, or submerged liquid storage systems." (To be available mid-1985)

UFC (1979) Uniform Fire Code, Section 79, Corrosion Protection, 1979 Edition including Appendix B.

The Uniform Fire Code (UFC) is probably the most readily available source to most everyone. It should be available at virtually every fire station in the western United States, or thru the Western Fire Chiefs Association.

The frequently asked question "Why cathodic protection is necessary" is probably best explained by the September 1984 edition of Engineering and Safety Service," American Insurance Service Group Special Bulletin No. 81 (enclosed). Refer to the first, second and last paragraphs.

From a practical application standpoint very, very seldom will a completed system installation (pipe and tank) test an absolute "0" tank-to-soil potential. This means there is usually some contact of the system with the soil where corrosion will take place.

Norton Corrosion Ltd. of Woodinville has stated in their literature that "cathodic protection when properly installed and maintained, will completely eliminate external corrosion damage to a buried metal structure."

If you have any further questions please contact me at (714) 865-4741.

Sincerely

William R. Stead

WILLIAM R. STEAD , P.E.
Corrosion Engineer

Attachments
CC State Water Board
NACE
Harold Singer
Tom Micqua
WRS:KLW

Engineering And Safety Service

AMERICAN INSURANCE SERVICES GROUP, INC.

85 John Street, New York, N.Y. 10038

Revised: *September, 1984*

Special Interest Bulletin No. 81

CATHODIC PROTECTION OF UNDERGROUND STEEL STORAGE TANKS AND PIPING

The lack of cathodic protection systems can result in unpredictable product losses due to the premature failure of steel underground tanks or piping. The product leakage is usually detrimental to the environment or persons or both.

The importance of cathodic protection systems is highlighted by requirements for their use in the Federal Regulations for gas transmission pipelines and gas utility distribution piping networks. In recent years, cathodic protection requirements for underground tanks have been added to NFPA 30, Flammable and Combustibile Liquids Code.

Corrosion of metals, whether in the atmosphere, underwater or underground, is caused by the flow of electricity from one metal to another, or to a receptor of some kind, or from one part of the surface of one piece of metal to another part of the same metal where conditions encourage the flow of electricty. At any point where electric current flows away from the surface, corrosion will occur.

In order to halt corrosion, some means must be provided to reverse the current flow so it will flow onto the metal surface. A cathodic protection system does this and stops the corrosion process.

Cathodic protection is an electrical method of preventing corrosion. It is used for protecting metallic structures that are in contact with an electrolyte (corrodent), such as soil or water. In order to stop the corrosion process, direct current from a rectifier or sacrificial anode must be continuously supplied to the exposed surface of the structures. The current must also be properly distributed and the current density must be adequate for the particular conditions.

Cathodic protection systems which utilize sacrificial anodes are designed to have a certain minimum life based on tests made on the soil and an assumed exposed steel surface area. The principal metals used for anodes are zinc, aluminum, and magnesium.

Cathodic protection systems that use a rectifier to provide impressed current utilize anodes which also have a specific design life. The principal metals used for such anodes are graphite, silicon-iron, and platinum niobium.

Underground storage tanks are available that are delivered from the factory with cathodic protection, an exterior protective coating, and electrical isolation. The cathodic protection system protects only the tank and not any connected piping. This system utilizes underground storage tanks which meet the requirements of the "Standard for Steel Underground Tanks for Flammable and Combustible Liquids", UL58, and has its protection system added to the tank. The protection system meets the requirements of the Steel Tank Institute "Standard No. sti-P_3, Specifications for sti-P_3 System of Corrosion Protection for Underground Steel Storage Tanks". This system uses sacrificial anodes.

Self-regulating, impressed current systems are available which are specifically adapted for the protection of service station tanks. The system can be used on new or existing installations without engineering surveys or soil resistivity tests. About 95% of such installations receive full protection and the remainder are close to full protection.

An annual survey should be made on all cathodic protection systems. These are electrical systems and require the same attention as any other electrical system. Unless there is an annual check on the system, there is no way to establish that needed protection is still being provided.

The application of protective coatings to metal surfaces to combat corrosion is accepted as good practice; however, what is not generally realized is that regardless of how good a coating may be initially, it will eventually develop flaws or "holidays", during handling, and installation operations, as well as from earth settlement after installation.

While flaws may be small and their number limited, intensified current flowing from these small area flaws can result in rapid penetration of the metal. In effect, installation of a coating on steel may result in leaks developing more quickly than for bare steel. This does not imply that coatings have limited value, but rather that they should be used in conjunction with cathodic protection unless a field survey by a certified cathodic protection engineer establishes that cathodic protection is not required.

RECOMMENDED PRACTICES

Item #53002

Control of External Corrosion on Underground or Submerged Metallic Piping Systems (Revised 1983) —RP-01-69

Presents procedures and practices which achieve effective control of external corrosion on buried or submerged metallic piping systems. Recommendations are also applicable to many other buried or submerged metallic structures and also describes the use of electrically insulated coatings, electrical isolation, and cathodic protection.

$4.00 NACE Member $5.00 Nonmember

Item #53004

Protection of Austenitic Stainless Steel in Refineries Against Stress Corrosion Cracking By Use of Neutralizing Solutions During Shut Down—RP-01-70

Examines varying procedures used by industry to protect austenitic stainless steel equipment while idle.

$4.00 NACE Member $5.00 Nonmember

Item #53008

Surface Preparation of Steel and Other Hard Materials by Water Blasting Prior to Coating or Recoating—RP-01-72

Gives specific data on time factors involved in cleaning of coated and uncoated steel by the water blast method. Makes specific recommendations for safety precautions.

$4.00 NACE Member $5.00 Nonmember

Item #53009

Direct Calculation of Economic Appraisals of Corrosion Control Measures —RP-02-72

Developed to establish standard methods for economic appraisal of alternate corrosion control measures. Use of the calculation schedules in this Recommended Practice should permit the corrosion engineer to prepare an acceptable corrosion control proposal.

$4.00 NACE Member $5.00 Nonmember

Item #53010

Method for Lining Lease Production Tanks with Coal Tar Epoxy —RP-03-72

Standard on application of interior, protective coal tar epoxy in lease production tanks.

$4.00 NACE Member $5.00 Nonmember

Item #53011

Methods and Controls to Prevent In-Service Cracking of Carbon Steel (P-1) Welds in Corrosive Petroleum Refining Environments (1976 Revision) —RP-04-72

Issued to provide refining industry with methods and procedures to assure safe, uninterrupted operation by prevention of in-service cracking of welds.

$4.00 NACE Member $5.00 Nonmember

Item #_____

Control of External Corrosion on Metallic Buried, Partially Buried, or Submerged Liquid Storage Systems

RP-____-____

NOTE!

THIS RECOMMENDED PRACTICE WILL BE ASSIGNED A NUMBER, PUBLISHED AND RELEASED IN MID 1985.

Item #53012

Design, Installation, Operation, and Maintenance of Impressed Current Deep Groundbeds —RP-05-72

Presents procedures and practices for design, installation, operation, and maintenance of deep groundbeds for cathodic protection of underground or submerged metallic structures.

$4.00 NACE Member $5.00 Nonmember

Item #53014

Collection and Identification of Corrosion Products —RP-01-73

Provides guidelines for collecting and analyzing corrosion products. The standard does not provide detailed procedures for analysis of corrosion products, but offers guidelines in methods and techniques of collecting samples.

$4.00 NACE Member $5.00 Nonmember

Item #53015

Handling and Proper Usage of Inhibited Oilfield Acids (API Bulletin D-15) (Joint API-NACE Project) —RP-02-73

Prepared by the API-NACE Subcommittee on Oilfield Acid Corrosion Inhibitor Evaluation and is jointly issued by both organizations as API Bulletin D-15 and NACE Standard RP-02-73.

$4.00 NACE Member $5.00 Nonmember

Item #53019

Corrosion Control of Electric Underground Residential Distribution Systems —RP-01-74

Presents procedures and practices for effective control of external corrosion on buried or submerged metallic components of electrical underground residential distribution (URD) systems.

$4.00 NACE Member $5.00 Nonmember

Item #53020

High Voltage Electrical Inspection of Pipeline Coating Prior to Installation —RP-02-74

Provides information on high voltage electrical inspection of pipeline coatings.

$4.00 NACE Member $5.00 Nonmember

Item #53025

Control of Internal Corrosion in Steel Pipelines and Piping Systems —RP-01-75

Describes procedures and practices to achieve effective control of internal corrosion in steel pipe and piping systems in crude oil, refined products, and gas service. This document contains specific practices for protecting steel piping systems.

$4.00 NACE Member $5.00 Nonmember

Item #53026

Application of Organic Coatings to the External Surface of Steel Pipe for Underground Service —RP-02-75

Assists users of all types of organic coating materials to obtain a satisfactory application of coating to the external surface of steel pipe.

$4.00 NACE Member $5.00 Nonmember

- Item #53027

Application and Handling of Wax-Type Protective Coatings and Wrapper Systems for Underground Pipelines —RP-03-75

Provides information on both hot and cold-applied wax coatings and component wrappers as coatings systems for the protection of underground piping. Suggests proper methods of obtaining surface preparation, coating application, handling, storage, and installation of the coated piping.

$4.00 NACE Member $5.00 Nonmember

- Item #53028

Selection of Metallic Materials to be Used in All Phases of Water Handling for Injection into Oil Bearing Formations —RP-04-75

Prepared as a guide for selecting corrosion resistant metallic materials for supply, storage, pumping, and injection of water encountered in oilfield operations.

$4.00 NACE Member $5.00 Nonmember

- Item #53029

Design, Installation, Operation, and Maintenance of Internal Cathodic Protection Systems in Oil Treating Vessels —RP-05-75

General guide for application of effective cathodic protection to all oil treating vessels. Includes design criteria, selection and installation of applicable systems, and the operation, monitoring, and maintenance of installed systems.

$4.00 NACE Member $5.00 Nonmember

- Item #53030

Corrosion Control of Offshore Steel Pipelines —RP-06-75

Presents procedures and practices to achieve effective control of corrosion on offshore steel pipelines. Includes guidelines on corrosion control design for offshore steel pipelines, use of protective coatings, criteria for cathodic protection, etc.

$4.00 NACE Member $5.00 Nonmember

- Item #53031

Preparation and Installation of Corrosion Coupons and Interpretation of Test Data in Oil Production Practice —RP-07-75

Encourages the use of uniform, industry-proven methods to monitor corrosion in oil production systems. Outlines procedures for preparing, analyzing, and installing corrosion coupons.

$4.00 NACE Member $5.00 Nonmember

- Item #53036

Control of Corrosion for Steel, Fixed Offshore Platforms Associated with Petroleum Production —RP-01-76

Provides guidelines on materials, practices, and methods for control of corrosion for offshore fixed platforms. The information concerns three major areas: the submerged zone, the splash zone, and the atmospheric zone.

$4.00 NACE Member $5.00 Nonmember

- Item #53037

Extruded Asphalt Mastic Type Protective Coatings for Underground Pipelines —RP-02-76

Guidelines for use of asphalt mastic type coating systems for application to underground pipelines for protection against external corrosion. Material characteristics, application methods and minimum satisfactory coating requirements are given.

$4.00 NACE Member $5.00 Nonmember

- Item #53038

Monolithic Organic Corrosion Resistant Floor Surfacings —RP-03-76

Describes the properties, application, and maintenance of monolithic surfacings for concrete floors which are subject to abuse by corrosive chemicals and mechanical wear.

$4.00 NACE Member $5.00 Nonmember

- Item #53039

Mitigation of Alternating Current and Lightning Effects on Metallic Structures and Corrosion Control Systems —RP-01-77 (1983 Revision)

Presents guidelines and procedures for use during design, construction, operation, and maintenance of metallic structures and corrosion control systems used to mitigate effects of lightning and overhead alternating current (AC) power systems.

$4.00 NACE Member $5.00 Nonmember

- Item #53041

Design, Fabrication, and Surface Finish of Metal Tanks and Vessels to be Lined for Chemical Immersion Service —RP-01-78

Guidelines for design, fabrication, and surface finishing of metal tanks and vessels that are to be lined for corrosion resistance and product contamination prevention.

$4.00 NACE Member $5.00 Nonmember

- Item #53042

Design and Operation of Stripping Columns for Removal of Oxygen From Water —RP-02-78

Guide for designing bubble tray and valve tray columns used in stripping oxygen from water.

$4.00 NACE Member $5.00 Nonmember

- Item #53043

Cathodic Protection of Pulp and Paper Mill Effluent Clarifiers —RP-01-80

Discusses structure design, cathodic protection requirements, coatings, protective criteria, and coatings. Also provides information about reference electrodes, selection and design of cathodic protection systems, installation and testing, and records concerning pulp and paper mill effluent clarifiers.

$4.00 NACE Member $5.00 Nonmember

- Item #53044

Liquid Applied Internal Protective Linings and Coatings for Oil Field Production Equipment —RP-01-81

Provides guidelines for obtaining an effective internal lining to protect against general or pitting corrosion of metal tanks and vessels commonly used in oil field operations at atmospheric and elevated pressures. Also included are various factors required to obtain a satisfactory linings in equipment design and fabrication considerations, lining selection, surface preparation, lining application, and inspection.

$4.00 NACE Member $5.00 Nonmember

- Item #53045

Method for Conducting Coating (Paint) Panel Evaluation Testing in Atmospheric Exposures —RP-02-81

A guide for establishing procedures for selecting test panels, preparing and painting the surfaces of panels, selecting test sites, and grading and evaluating panels in atmospheric exposures. These recommendations apply only to atmospheric exposure.

$4.00 NACE Member $5.00 Nonmember

- Item #53046

Initial Conditioning of Cooling Water Equipment —RP-01-82

The procedures outlined are for protecting cooling water equipment from initial corrosion that occurs prior to cooling water exposure and are primarily intended for low carbon (mild) steel equipment, but also apply to other metals and their alloys used in cooling water systems.

$4.00 NACE Member $5.00 Nonmember

TEST METHODS

- Item #53003

Laboratory Corrosion Testing of Metals for the Process Industries (1976 Revision) —TM-01-69

Guidelines for laboratory immersion corrosion studies. Provides a consensus on the best current technology for laboratory corrosion testing.

$4.00 NACE Member $5.00 Nonmember

- Item #53006

Method of Conducting Controlled Velocity Laboratory Corrosion Tests —TM-02-70

Provides a method by which laboratory corrosion test may be reproducibly conducted under velocity conditions. The method described is applicable only to the study of the effects of solution velocity on corrosion rate of a metal and is not to be used to determine the effect of a solution impinging on a metal surface.

$4.00 NACE Member $5.00 Nonmember

- Item #53007

Autoclave Corrosion Testing of Metals in High Temperature Water —TM-01-71

Provides information on the utility and reliability of high temperature aqueous corrosion data. Information also is provided on how data are obtained and the possible limitations for application of the data to selection of materials or determination of environmental conditions for high temperature water systems.

$4.00 NACE Member $5.00 Nonmember

- Item #53013

Antirust Properties of Petroleum Products Pipeline Cargoes (Revised 1976) —TM-01-72

Provides a uniform method of testing the antirust properties of products pipeline cargoes. This test method is a modification of ASTM D-665. Gasoline and other petroleum products are included in the method.

$4.00 NACE Member $5.00 Nonmember

- Item #53016

Methods for Determining Water Quality for Subsurface Injection Using Membrane Filters (Revised 1976) —TM-01-73

Provides standard test methods for use in the evaluation of water quality for injection water in oil field equipment.

$4.00 NACE Member $5.00 Nonmember

- Item #53021

Laboratory Methods for the Evaluation of Protective Coatings Used as Lining Materials in Immersion Service —TM-01-74

Provides guidelines to help manufacturers and users of protective coatings to select materials by providing standard test methods for evaluating protective coatings used as linings for immersion service. This standard provides two test methods for evaluating protective coatings on any substrate, such as steel, copper, aluminum, etc., so both the factors of chemical resistance and permeability can be considered.

$4.00 NACE Member $5.00 Nonmember

- Item #53022

Dynamic Corrosion Testing of Metals in High Temperature Water —TM-02-74

Guidelines for corrosion testing of metals exposed to high temperature water used in high pressure steam plants or water-cooled nuclear reactor plant systems. This standard provides standardized test methods to determine the effects of high temperature water.

$4.00 NACE Member $5.00 Nonmember

- Item #53023

Laboratory Screening Tests to Determine the Ability of Scale Inhibitors to Prevent the Precipitation of Calcium Sulfate and Calcium Carbonate from Solution —TM-03-74

Provides test methods of comparing the effectiveness of inhibitors in preventing precipitation of calcium sulfate and calcium carbonate from solution. Tests described can be used to the extent of calcium deposition from oil field waters.

$4.00 NACE Member $5.00 Nonmember

- Item #53033

Performance Testing of Sucker Rods by the Mixed String, Alternate Rod Method —TM-02-75

Describes a testing procedure that has been used to compare the performance of different types and grades of sucker rods in the same environments. This test procedure is commonly called a "mixed string test."

$4.00 NACE Member $5.00 Nonmember

- Item #53034

Abrasion Resistance Testing of Thin Film Baked Coatings and Linings Using the Falling Sand Method —TM-03-75

Provides manufacturers, applicators, and users of thin film baked coatings and linings with a uniform comparative test method for evaluating abrasion resistance of thin coatings used to protect the inner wall of tubular goods. This test method serves as a modification of ASTM D-968 on the abrasion testing of coated flat panels.

$4.00 NACE Member $5.00 Nonmember

- Item #53040

Testing of Metals for Resistance to Sulfide Stress Cracking at Ambient Temperatures —TM-01-77

Guideline for testing of metals for resistance to cracking failure in aqueous environments containing hydrogen sulfide. Purpose of the test method is to facilitate uniformity in testing so that data may be accumulated from different sources and compared on an equal basis.

$4.00 NACE Member $5.00 Nonmember

- Item #53048

Evaluation of Internal Plastic Coatings for Corrosion Control of Tubular Goods in an Aqueous Flowing Environment —TM-01-83

Provides manufacturers, applicators, and users of internal pipe coatings with a method of comparing the performance of these coatings. This method provides a means of comparing materials under identical conditions.

$4.00 NACE Member $5.00 Nonmember

- Item #53049

Accelerated Test Procedures for Screening Atmospheric Surface Coating Systems for Offshore Platforms and Equipment —TM-01-84

Provides alternative methods of screening protective coating systems for protection of offshore oilfield equipment against environmental deterioration or for aesthetic reasons, for use in evaluating, on a comparative basis, the results from other protective coating system tests. Describes four of the main accelerated test procedures used by offshore operators for evaluating and selecting protective coating systems for use on offshore structures.

$4.00 NACE Member $5.00 Nonmember

- Item #53050

Evaluation of Pipeline Steels for Resistance to Stepwise Cracking —TM-02-84

Provides a standard set of test conditions for consistent evaluation of pipeline steels and test results from different laboratories pertaining to the results of the absorption of hydrogen generated by corrosion of steel in wet hydrogen sulfide (H_2S). Test is intended to evaluate resistance to stepwise cracking only, and not other adverse effects of sour environments such as sulfide stress cracking, pitting or weight loss from corrosion.

$4.00 NACE Member $5.00 Nonmember

MATERIAL REQUIREMENTS

- Item #53017

Recommendations for Selecting Inhibitors for Use as Sucker Rod Thread Lubricants —MR-01-74

Provides guidelines for selecting and testing lubricants used downhole on sucker rod threads.

$4.00 NACE Member $5.00 Nonmember

- Item #53018

Material Requirements in Prefabricated Plastic Films for Pipeline Coatings —MR-02-74

Established material requirements of four types of prefabricated plastic films used for pipeline coating. The standard provides a basis for identification of these pipeline coatings by external parties.

$4.00 NACE Member $5.00 Nonmember

- Item #53024

Sulfide Stress Corrosion Cracking Resistant Metallic Material for Oil Field Equipment (1980 Revision includes Supplement Numbers 1, 2, 3, and 4) —MR-01-75

Provides guidelines for selecting materials for use in sulfide environments. Much of the information is directed toward oil and gas production service. Many of the guidelines and specific requirements are based on field experience with materials in specific components and may be applicable to other components and equipment in the oil production industry or to other industries.

$4.00 NACE Member $5.00 Nonmember

- Item #53035

Metallic Materials for Sucker Rod Pumps for Hydrogen Sulfide Environments —MR-01-76

API Standards (1) 11AX (6th ed., 1971) on Subsurface Pumps and fittings concerns sucker rod pumps. However, no materials specifications or guidelines for the proper application of the various API pumps are given. To supplement this API Standard, Task Group T-1F-12 prepared this MR-01-76 specifying the material requirement of metallic materials for construction of sucker rod pumps for service in hydrogen sulfide environments.

$4.00 NACE Member $5.00 Nonmember

Subchapter 15
#26

OWENS-CORNING FIBERGLAS CORPORATION FIBERGLAS TOWER, TOLEDO, OHIO 43659, (419) 248-8000

October 16, 1984

Mr. Harold J. Singer, Water Resources Control Engineer
State of California
Division of Technical Services
901 P. Street
Sacramento, CA 95814

Subject: Underground Tank Regulations

Dear Mr. Singer,

Thanks for agreeing to meet with me on Thursday, October 18, to review my comments concerning the above subject. I am sorry I missed your September 17, work session and appreciate this opportunity to meet with you.

It is my understanding that there were some questions raised concerning fiberglass reinforced plastic tanks at your September 17 meeting. Here are my comments concerning these questions.

1) What is the proper thickness of a dipstick deflector plate in a fiberglass tank?

UL 1316, Glass Fiber Reinforced Plastic Storage Tanks for Petroleum Products states as follows: "A tank shall have a deflection plate of steel at least 0.053" thick or aluminum at least 1/8" thick. The deflector plate shall be at least 9" wide and at least one square foot in area under each opening, or one opening that is marked to indicate the dipstick measurement shall be made only at that location."

The deflector plate furnished in the Owens-Corning tank is 16 gauge sheet steel which is 0.059" thick.

We believe that internal corrosion is a significant factor for both fiberglass as well as steel tanks but for different reasons. Fiberglass tanks need to be protected from potential mechanical abuse caused by metal dipsticks. Steel tanks need to be protected from the corrosion cell that is set up when dipsticks remove mill scale from the tank surface exposing shiny metal to dull metal thus expediting the corrosion process. (A copy of the Steel Tank Institutes "Recommended Practice for Optional Interior Corrosion Control System for Steel Tanks", is attached.

I am also attaching a copy of a report prepared by Hinchman Company - Corrosion Engineers, covering the subject of internal corrosion of steel tanks.

We believe that deflector plates (wear plates) should be provided in all tanks regardless of the material of construction. We also support The Steel Tank Institute's recommendation that the bottom 60° of all lap or offset circumferential seams be seal welded and or cathodically protected.

2) Compatibility of fiberglass reinforced plastic tanks with methanol or ethanol gasoline blends?

We have done extensive testing on our fiberglass laminate when used to store alcohol/gasoline blends, as well as neat or near neat alcohol motor fuel. A copy of our warranty is attached. It illustrates the favorable results we've obtained when storing up to 10% ethanol with gasoline, or up to 5% methanol with gasoline. These alcohol gasoline mixtures carry the same long term internal/external corrosion warranty as tanks used for the storage of pure petroleum products. One of the Major Oils has been actively promoting the use of its methanol additive called Oxinol-50. I am attaching a copy of an Arco Chemical Report which shows test results for our tanks when used to store a variety of alcohol gasoline mixtures.

3) Is the Fiberglas design a true double-wall tank or could the primary tank leak and escape detection in the annular space?

I am attaching a copy of our current literature related to our second generation double-wall tank. (I will also have a sample with me when we meet on Thursday.) You'll note the design has been modified. It is now a primary container with the usual reinforcing ribs attached to the secondary container. The secondary container also contains ribs solely for the purpose of minimizing handling damage and providing location points for hold down straps. The new design allows the use of all of the currently marketed leak monitoring devices.

In addition, this design offers the owner the option of using a liquid head pressure monitoring system, which we believe to be the most fool proof system available today. It offers a significant advantage in that:

a) it CONTINUOUSLY monitors the integrity of both the primary container as well as the secondary container.

b) the monitoring system checks 360° of both the primary tank as well as the secondary tank in both high water as well as low water table installation conditions.

- - Systems that only monitor an accumulation of product leaked from the primary container or water leaked in

through the secondary container have the potential for allowing petroleum products to escape. (e.g. - In an area where water table is below the tank the outer shell could be perforated without activating the monitoring device in the annular space. A leak in the primary container could fill the annular space and allow the product to leak before remedial steps may be taken. A fool proof system needs to address this possibility.)

Paragraph 2642 - Underground Storage Tank Testing - calls for corrosion resistent tanks to be tested within one year of permanent issuance and yearly beginning fifteen years after tank installation. It would appear that tanks making use of a continuous liquid head pressure monitoring system or similar continuous testing device would be exempt from these test requirements. The liquid head pressure system is capable of detecting a loss of .05 gallons per hour. It would effectively place a tank under constant surveillance.

4) Paragraph 2635 - General Construction Standards, paragraph (b) (4) Cathodically Protected Steel Tanks and Steel Tanks Coated with Glass Fiber Reinforced Plastic...

There are industry standards available for use as reference. For example,
-American Petroleum Institute publication 1632 - 1983, Cathodic Protection of Underground Storage Tank Piping Systems
-Underwriters Laboratory of Canada - ULC 603.1-M-1982 Standard for Galvanic Corrosion Protection Systems for Steel Underground Tanks for Flammable and Combustible Liquids
-National Association of Corrosion Engineers - Standard RP-01-69 (1983) - Recommended Practice - Control of External Corrosion of Underground or Submerged Metallic Piping Systems

To the best of my knowledge there are no industry standards applicable to steel tanks clad with glass fiber reinforced plastic.

I appreciate your taking the time to review these comments. I look forward to seeing you on Thursday.

Very truly yours,

Edward C. Nieshoff

Edward C. Nieshoff, Market Manager
Underground Tanks/Codes
Non-Corrosive Products Divison

ECN/bw
cc: Steve Fagundas, Water Resources Control Engineer
Paul Robinson - OCF - San Francisco Br.

Report No. 7

Investigation of Internal Corrosion of Steel Fuel Storage Tanks

THE HINCHMAN COMPANY

CORROSION ENGINEERS

TABLE OF CONTENTS

Section		Page No.
1.	INTRODUCTION	1
1.1	Objective	1
1.2	Summary	2
2.	CAUSES OF INTERNAL CORROSION	3
2.1	General	3
2.2	Mechanisms of Corrosion	4
2.3	Corrosion Due to Water and Oxygen	8
2.4	Corrosion from Bacteria	9
	Table I	9
2.5	Corrosion by Atmospheric Conditions	10
2.6	Corrosion by Galvanic Cells	11
	Table II	11
2.7	Mechanical Factors	13
3.	CORROSION CONTROL	14
3.1	General	14
3.2	Water and Oxygen	14
3.3	Bacteria	15
3.4	Galvanic Corrosion	16
3.5	Tank Installation	16
3.6	Alternate Materials of Construction	17
4.	GASOLINE STORAGE TANK INTERNAL CORROSION EXPERIENCE	18
4.1	General	18
4.2	Oil Company Experience	18
4.3	Service Station Tank Maintenance Experience	23
5.	OTHER CONSIDERATIONS	24
5.1	Fuel Oil Storage Tank Corrosion	24
5.2	Internal Coating of Automobile Gasoline Tanks	24
6.	BIBLIOGRAPHY	25

FRANCIS PALMS BUILDING • DETROIT, MICHIGAN 48201 • TEL 313-962-5272

INVESTIGATION of INTERNAL CORROSION of STEEL FUEL STORAGE TANKS

Prepared for
Owens-Corning Fiberglas Corporation
Toledo, Ohio 43601

Your Order No. GD-1642/449407
Our Job No. 270-1600
August 31, 1970

A. L. Claes
Project Manager

Lewis H. West, P.E.
President

The Hinchman Company
Corrosion Engineers
Francis Palms Building
Detroit, Michigan 48201

INVESTIGATION of INTERNAL CORROSION of STEEL FUEL STORAGE TANKS

1. INTRODUCTION

1.1 Objective

1.1.1 Internal corrosion failures of cathodically protected underground steel fuel storage tanks have indicated that this type of corrosion be investigated. A study was made to evaluate internal corrosion of underground steel fuel storage tanks.

1.1.2 To gain an understanding of the problems associated with storage of fuel in steel tanks, the basic mechanisms and techniques of corrosion control influencing internal corrosion are discussed.

1.1.3 The general experience with internal corrosion of steel fuel storage tanks is explored in the literature and with operating oil companies. It is concluded that internal corrosion of steel storage tanks is a significant problem which should be considered when specifying material for construction of underground fuel storage tanks.

1.2 Summary

1.2.1 Internal failures of fuel storage tanks are of concern to several oil companies. They have begun intensive investigative programs. Several tank lining contractors have reported internal corrosion leaks in 30% to 60% of the tanks they line. Because of insufficient data an exact determination is not possible.

1.2.2 Internal corrosion of steel fuel storage tanks is dependent on (1) solubility of oxygen and water in the product, (2) frequency of filling and emptying, (3) humidity and pollution of the atmosphere, (4) sludge and dirt accumulation, (5) presence of bacteria, and (6) irregularities of the internal tank surface.

1.2.3 While internal corrosion can be reduced or eliminated by control of the factors causing it, many required controls, such as inhibitors, elimination of oxygen and water, and production of a truly uniform interior tank surface, are commercially impractical for fuel storage tanks. Alternate materials of construction such as fiber glass reinforced plastic should be considered as an effective means of preventing internal corrosion and possible increased bacterial growth due to rust.

FRANCIS PALMS BUILDING • DETROIT, MICHIGAN 48201 • TEL 313-962-5272

2. CAUSES OF INTERNAL CORROSION

2.1 General

2.1.1 Most metallic tanks can corrode internally when exposed to the product stored in them, and care must be exercised in proper selection of tank material for given applications. In this study of fuel storage tanks, low-alloy steels are the only metallic materials considered.

2.1.2 The corrosivity of the environment inside of a gasoline storage tank is influenced by the following:

(1) water accumulation from the product or condensation

(2) the amount of oxygen

(3) the formation and deposition of sludge

(4) presence of bacteria

(5) the accumulation of dirt and scale.

2.1.3 Mechanical factors which can effect corrosion of tank interiors are:

(1) slope of the tank bottom

(2) dents and irregularities caused by installation

(3) impingement on the tank bottom of the liquid level measuring device

(4) frequency of filling and emptying.

FRANCIS PALMS BUILDING • DETROIT, MICHIGAN 48201 • TEL 313-962-5272

2.2 Mechanisms of Corrosion

2.2.1 Uniform Attack

A general uniform corrosion of a metal in contact with a solution or electrolyte. This type of attack may also take place in relatively dry atmospheric conditions.

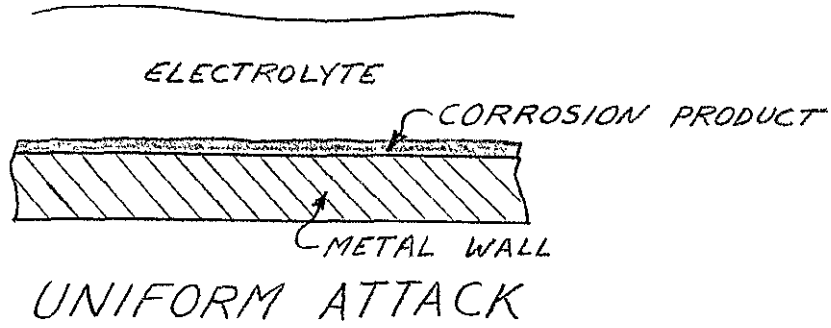

A uniform layer of corrosion product generally forms. This may slow down the corrosion rate.

FRANCIS PALMS BUILDING • DETROIT, MICHIGAN 48201 • TEL 313-962-5272

2.2.2 Pitting Corrosion

The breakdown of protective films or layers of corrosion product generally results in localized pitting. An anode is formed where the film is broken and the

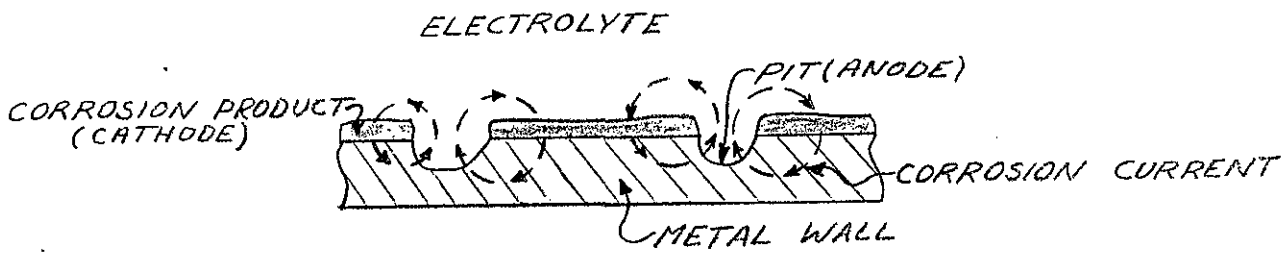

PITTING CORROSION

unbroken film or corrosion product acts as the cathode. Pitting corrosion concentrates the attack in a small area and can result in penetration of metal in a relatively short time.

FRANCIS PALMS BUILDING • DETROIT, MICHIGAN 48201 • TEL 313-962-5272

2.2.3 Concentration Cells

Shielding of a metal surface by a droplet of water, deposit of foreign material, or sludge can set up areas of concentration differential. The oxygen concentration cell is a classic example of this type of corrosion.

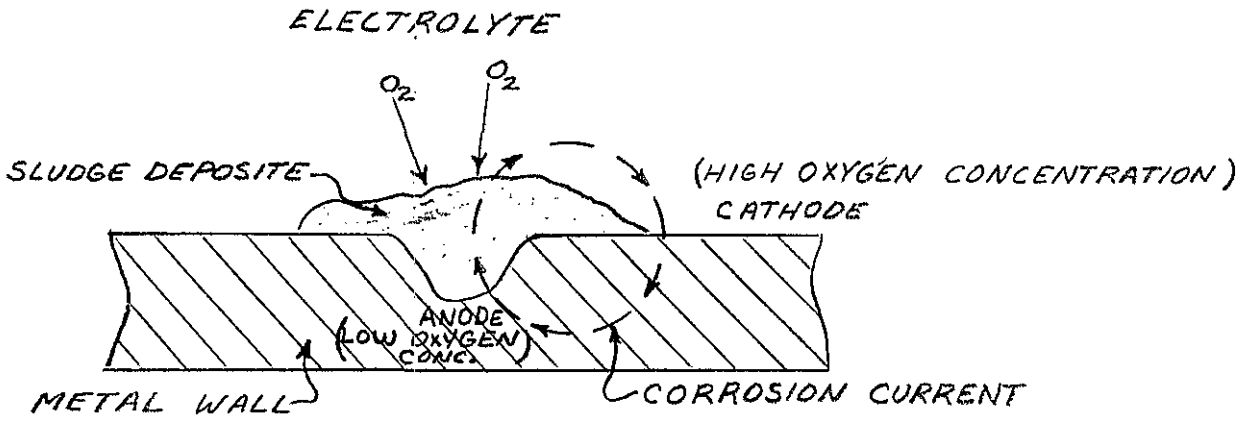

OXYGEN CONCENTRATION CELL

2.2.4 Bacterial Attack

There are many forms of bacterial attack depending on the type bacteria involved. In general, the metabolism of the bacteria result in corrosion by (1) destruction of protective coatings, (2) formation of hydrogen sulfide, (3) production of acids, (4) formation of galvanic cells, and (5) oxidation of ferrous iron. The general types of bacteria which attack ferrous metals are sulfate-reducing or sulfate-oxidizing bacteria, bacteria that reduce carbon dioxide and oxidize hydrogen, bacteria that metabolize iron and manganese ions, and micro-organisms that form deposits. /1/ Bacterial corrosion is discussed further in Section 2.4.

FRANCIS PALMS BUILDING • DETROIT, MICHIGAN 48201 • TEL 313-962-5272

2.2.5 Galvanic Corrosion

When two dissimilar materials separated widely in the electromotive series, such as copper and steel, are in contact in the presence of an electrolyte (water), galvanic attack results, causing the anode (steel) to corrode.

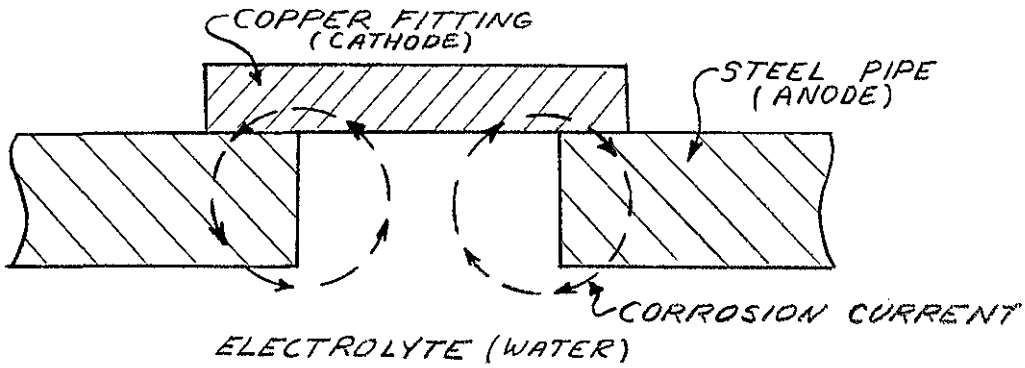

GALVANIC CORROSION

Galvanic cells may also be caused by differences within the material itself, such as segregation of alloy constituents, impurities, and surface conditions.

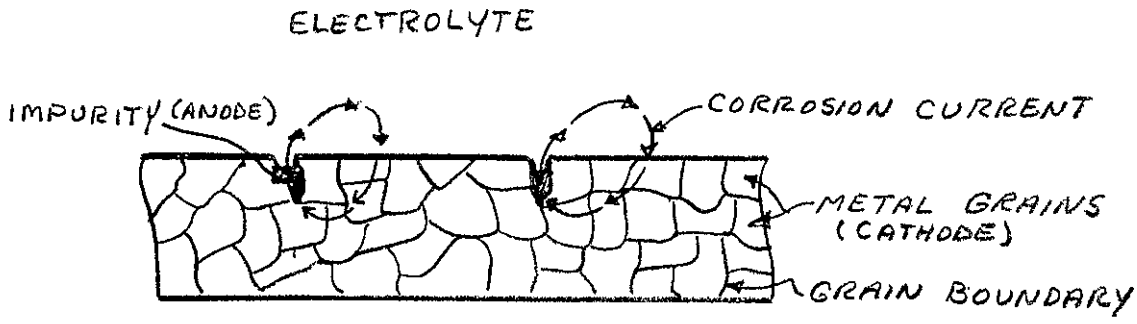

GALVANIC CORROSION DUE TO IMPURITIES IN THE METAL

FRANCIS PALMS BUILDING • DETROIT, MICHIGAN 48201 • TEL 313-962-5272

2.3 Corrosion Due to Water and Oxygen

Ferrous metals normally pit in neutral water because the protective rust film is ordinarily irregular. /9/ Breaks in the rust layer lead to different rates of oxygen diffusion causing oxygen concentration cells. Studies have shown that significant corrosion can occur during transportation and storage of gasoline due to water and oxygen. /2/ The solubility of water in gasoline and related hydrocarbons increases with temperature. Figure 1 shows the magnitude of the solubility of water in hydrocarbons. For example, 100 pounds of water-saturated heptane will precipitate 0.05 pound of water on cooling from 140° to 80°F. Precipitation of water is greater in high-test gasolines containing considerable aromatics. Corrosion, due to the precipitation of water in gasoline, was demonstrated by laboratory experimentation. In cooling gasoline from 140°F, water droplets formed on the surface of steel causing formation of oxygen concentration cells. Severe corrosion from these cells was noted in only two months.

FRANCIS PALMS BUILDING • DETROIT, MICHIGAN 48201 • TEL 313-962-5272

B. K. ELLIOTT CO. 133 1M 7-70

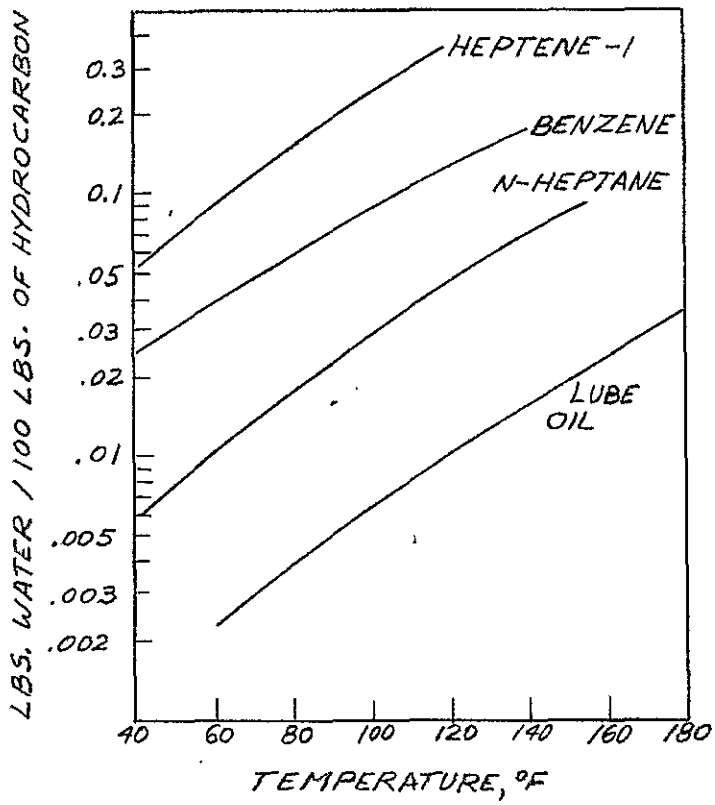

SOLUBILITY OF WATER IN HYDROCARBONS

FIGURE 1.

	DRAWN:	JOB NO.	FIG. NO.
	CHECK:	THE HINCHMAN CO.	
	DATE:	FRANCIS PALMS BLDG. DETROIT, MICH. 48201	

2.4 Corrosion from Bacteria

An interrelation has been found among bacteria, water, and refined petroleum products in storage tanks. /3/ The effect of bacteria on corrosion and the effect of rust on bacteria are illustrated in Figure 2 and Table I, respectively.

Table I: Effect of Rust on Growth of Bacteria

	Bacterial Count per Ml.	
	Without Iron	With Iron
Initial Count	178	175
After 48 hours room temperature in the dark	20	Over 2,000,000

Bacteria found in water-petroleum interfaces of gasoline storage tanks feed on the tank bottom waters as well as the hydrocarbons. The metabolic products of bacterial growth can set up localized corrosive conditions which cause severe pitting of metal surfaces. Bacteria congregate on iron surfaces and result in the formation of rust and slime. This further encourages growth of bacteria. The slimes hold the rust and other sediments in suspension, particularly at the gasoline-water interface, and cause further bacterial growth initiating a vicious cycle. Formation of such bacterial slimes at jet fuel-water interfaces have been known to cause contamination of fuel filters in jet aircraft.

FRANCIS PALMS BUILDING • DETROIT, MICHIGAN 48201 • TEL 313-962-5272

B. K. ELLIOTT CO. 133 1M 7-70

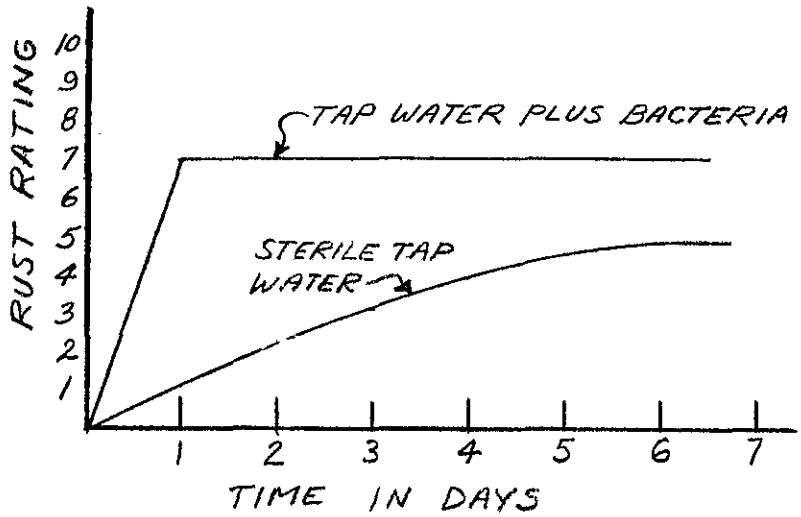

FIGURE 2. BACTERIA ACCELERATE CORROSION

	DRAWN:	JOB NO.	FIG. NO.
	CHECK:	THE HINCHMAN CO.	
	DATE:	FRANCIS PALMS BLDG. DETROIT, MICH. 48201	

2.5 Corrosion by Atmospheric Conditions

2.5.1 Atmospheric Pollution

Atmospheric pollution can be a significant factor in corrosion. The most important and corrosive of the airborne contaminants is sulfur dioxide. It can form sulfuric acid in the presence of air and moisture. /4/ Sulfur dioxide levels have been correlated with corrosion rates in several test areas and a direct relationship has been found. /5/ /6/

Heavily polluted areas may have corrosion rates as high as some marine atmospheres, and polluted temperate atmospheres can be considered more corrosive than clean, tropical atmospheres. /7/

2.5.2 Humidity

Given a specific level of pollution of an atmosphere, the factor controlling corrosion rates is the proportion of time the relative humidity exceeds its critical value for a given metal. The critical humidity for steel is 70% and a secondary critical humidity for iron is 80%. /8/ Water must be present for atmospheric corrosion, so corrosion rates generally increase with humidity.

FRANCIS PALMS BUILDING • DETROIT, MICHIGAN 48201 • TEL 313-962-5272

2.6 Corrosion from Galvanic Cells

The following are examples of how differences in materials can cause corrosion. /11/

2.6.1 Dissimilar Metals in Contact in an Electrolyte

When two dissimilar materials are connected and in contact with an electrolyte, one becomes the anode and corrodes and the other becomes the cathode and is protected. Table II shows some important combinations of materials with relation to their corrosion tendencies.

Table II: Corrosion Tendencies - Voltaic Couples

Anodic	Cathodic
Steel	Cementite
Cast Iron	Graphite flakes
Iron	Sulfide of iron
Iron	Sulfin
Iron	Lead
Iron	Mill scale
Iron	Brass
Iron	Copper
Iron	Monel metal
Iron	Nickel
Iron	Tin
Iron (non-aerated)	Iron (aerated)

FRANCIS PALMS BUILDING • DETROIT, MICHIGAN 48201 • TEL 313-962-5272

Table II: Continued

Anodic	Cathodic
Iron	Hydrogen
Iron (moving electrolyte)	Iron (stationary electrolyte)
Strained metal	Unstrained metal
Aluminum	Iron
Cadmium	Iron
Zinc	Iron
Magnesium	Iron

It is significant to note that iron is anodic to mill scale, sulfur and iron sulfide, any one of which may be present in ferrous metal tanks handling gasoline.

2.6.2 Scratches or Abrasion

If a metal surface becomes scratched or abraded, the scratched or abraded area will be anodic to the surrounding area.

2.6.3 Rough Surfaces

In cases where a rough metal surface is adjacent to a smooth surface, the rougher surface is anodic to the smoother one.

2.6.4 Differential Curvature

If a metal has curved surfaces, the more highly convex surface is anodic to the less convex surface.

FRANCIS PALMS BUILDING • DETROIT, MICHIGAN 48201 • TEL 313-962-5272

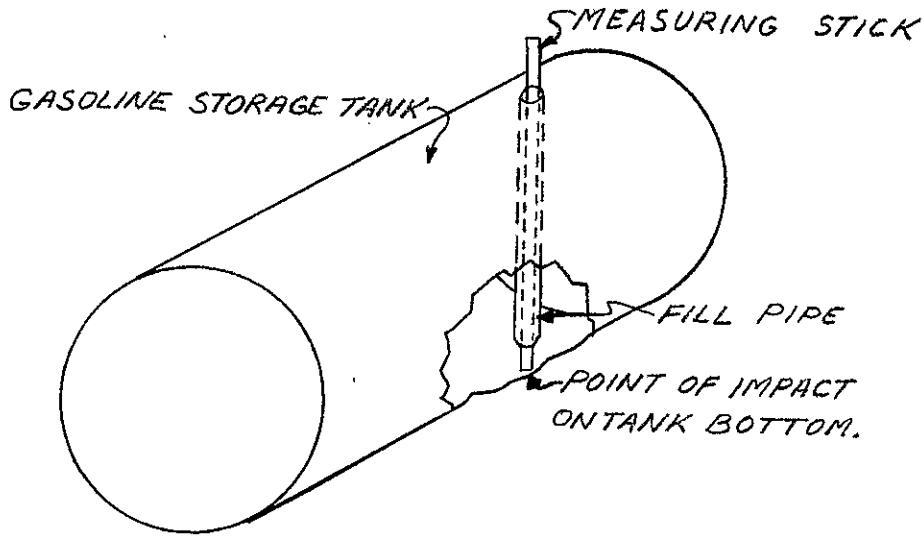

FIGURE 3. TYPICAL METHOD OF MEASURING GASOLINE STORAGE TANK LIQUID LEVEL

	DRAWN:	JOB NO.	FIG. NO.
	CHECK:	THE HINCHMAN CO.	
	DATE:	FRANCIS PALMS BLDG. DETROIT, MICH. 48201	

2.7 Mechanical Factors

Several mechanical factors can contribute to internal corrosion of ferrous metal tanks. The slope of the tank bottom and any irregularities or dents in the tank caused by tank installation which lead to formation of pockets to permanently trap tank bottom water can cause areas of concentrated attack. An example of distortion of the tank bottom caused during installation is shown in Photograph 2 on page 22.

The practice of measuring liquid levels in gasoline storage tanks with a measuring stick may also contribute to corrosion. Figure 3 illustrates a typical method of measuring liquid levels in gasoline storage tanks. Daily checking, through repeated impacts on the tank bottom, can cause breakdown of any protective film, exposing metal and resulting in concentrated attack.

The frequency of filling and emptying of the tank will directly affect the amount of water in the tank. Depending on the filling rate, gasoline entering the tank can stir up bottom water and sludge layers, causing impingement on the tank in areas above the water line. Any naturally formed protective film can be damaged and pitting action may occur.

FRANCIS PALMS BUILDING • DETROIT, MICHIGAN 48201 • TEL 313-962-5272

3. CORROSION CONTROL

3.1 General

Internal corrosion of metal tanks can be reduced or prevented by modification or control of the internal environment, design, installation practices, and the use of alternate materials of construction.

3.2 Water and Oxygen

Since the presence of both water and oxygen is necessary for internal corrosion of ferrous metal tanks, any system which would eliminate or reduce either of these will reduce corrosion. Complete elimination of water from the tanks is not practical because of the water carried in the gasoline from processing. Successful corrosion control by limiting oxygen has been obtained by pressure storage, gas blanketing and by some types of breathing systems. /10/ For example: Corrosion rates in liquified petroleum gas spheres are low (1 mpy to 3 mpy compared to rates as high as 20 mpy for gasoline tanks) because there is no breathing. Water is present from processing and is removed periodically. Breathing systems which use gas holders to store excess vapor operate on positive pressure and reduce air drawn into the system, keeping corrosion rates low.

FRANCIS PALMS BUILDING • DETROIT, MICHIGAN 48201 • TEL 313-962-5272

3.3 Bacteria

To combat corrosion due to bacterial action, three means are generally employed:

(1) Methods designed to inhibit growth of micro-organisms

(2) Protective coatings

(3) Cathodic protection /1/

In product storage, good housekeeping and proper cleaning are essential to remove settling spaces where bacteria may develop. Considerable importance is placed on the use of chemical bactericides. Care must be exercised in selection of the proper bactericide because most of them are in themselves corrosive. Those which are not corrosive, such as gentian violet, are expensive. The use of protective coatings is effective only if the coating is truly continuous and without pinholes. Some of the organic coatings act as food for certain bacteria and can result in promoting growth of bacteria as well as degradation of the coating. Cathodic protection is effectively used to combat underground bacterial corrosion but does not appear practical for internal protection of gasoline storage tanks.

It has also been reported that the deterioration associated with bacterial contamination of refined petroleum products, such as gasoline, kerosene and jet fuel can be controlled by the use of hydrocarbon-soluble boron compounds. /3/

The concentration of boron required will depend on the structure of the boron compound used.

FRANCIS PALMS BUILDING • DETROIT, MICHIGAN 48201 • TEL 313-962-5272

3.4 Galvanic Corrosion

Internal galvanic corrosion can be controlled by avoiding couples of dissimilar metals, electrical insulation of dissimilar metal couples, coatings, limiting aeration to cathodic surfaces, and the use of inhibitors. In the case of gasoline storage tanks, control of this type of corrosion depends on the use of inhibitors, control of oxygen and water, substitution of materials or employing a uniform tank surface free of mill scale or imperfections. The control of oxygen and water is difficult due to water in the product from processing and the taking on of atmospheric air every time gasoline is pumped from the tank.

Inhibitors are impractical because certain inhibitors, if not employed at proper concentration, can cause localized corrosion and intensify corrosion. Also, frequent periodic checks of inhibitor level must be made to assure the proper level of concentration.

3.5 Tank Installation

Proper installation procedures are important to prevent opportunities for corrosive liquids to collect and remain in pockets. Tank bottoms should be sloped and drains located so that all bottom water can be drained without leaving pools of liquid. Dents in the tank surface should be avoided because they may result in pockets for accumulation of tank bottom water. Controlled ventilation of the tanks should be considered due to the effect of condensation adding water and pollutants to the tank interior.

FRANCIS PALMS BUILDING • DETROIT, MICHIGAN 48201 • TEL 313-962-5272

3.6 Alternate Materials of Construction

The use of a more resistant material of construction is common in corrosive environments. High-alloy steels or other metallic alloys are often substituted for low-alloy steel. Within the past 15 years, great advances have been made in the development of non-metallic materials of construction; the most notable being the development of synthetic resins reinforced with fiber glass which may be fabricated into pipes, fittings, and tanks.

Fiber glass-reinforced plastics have been tested in a variety of hydrocarbons to study their value in combating internal corrosion. /12/ The tests indicated that ten petroleum products had little effect on the FRP materials. Values of gum content and silting index were also determined for the products tested to detect any product degradation due to FRP laminates. The tests indicated FRP to be satisfactory for storing petroleum products.

FRANCIS PALMS BUILDING • DETROIT, MICHIGAN 48201 • TEL 313-962-5272

4. GASOLINE STORAGE TANK INTERNAL CORROSION EXPERIENCE

4.1 General

Internal corrosion of underground gasoline storage tanks has in general been underrated. Most failures of underground ferrous metal gasoline storage tanks have been attributed to external corrosion caused by galvanic attack of the soil. Recently, increased use has been made of cathodic protection to control external corrosion of these tanks. There have been corrosion failures of some cathodically protected tanks that have been identified as internal corrosion. This has resulted in creating considerable interest in internal corrosion.

4.2 Oil Company Experience

4.2.1 Major oil companies must expend large sums of money for repair and replacement of service station gasoline storage tanks. In addition to repair costs are costs due to loss of product, loss of revenue during repairs, liability costs for damage from tank leaks, costs due to violation of anti-pollution laws, and loss of good public relations.

4.2.2 One major oil company /13/, which operates nationally, has initiated an intensive program to investigate internal corrosion of its service station storage tanks. All service station tanks which are removed will be cut open

FRANCIS PALMS BUILDING • DETROIT, MICHIGAN 48201 • TEL 313-962-5272

and examined internally for corrosion. They have examined several cases of corrosion failures in stations in the Northeast and found most of the internal corrosion failures under the fill tube. While most of the corrosion was located in the area of the fill tube, internal corrosion was also found in other areas of the tanks. All of these tanks were sloped toward the fill end, which allowed the sludge, bottom water, and any loose scale to accumulate near the fill tube. Depths of gasoline and bottom water were checked by dropping a dip stick down the fill tube. The average age of the tanks inspected is 12 years.

4.2.3 One oil company /14/ operating in the Great Lakes area (Illinois, Michigan, Ohio and Wisconsin) has experienced corrosion failures of service station gasoline storage tanks which were protected from external corrosion by cathodic protection. At one location in the Detroit area, examination of the tank interiors revealed localized pitting in several areas. One tank was found to have an approximate 1/2-inch diameter round hole through the wall caused by pitting action. The hole was located on the tank bottom near, but not under, the fill pipe. Failure occurred approximately 5 years after installation. Photograph 1 shows the inside of the tank wall with this hole and adjacent pits. In addition,

FRANCIS PALMS BUILDING • DETROIT, MICHIGAN 48201 • TEL 313-962-5272

internal corrosion failures were found in tanks at three other area stations due to similar pitting. These tanks ranged in age from 6 to 12 years.

At another location in Ohio, an internal corrosion failure occurred on a tank after 6 years. This tank is interesting because it was water-ballasted 1/2 full for 6 months during installation. Photograph 2 shows the interior of this tank. The area under water during ballasting is evident due to staining and discoloration of the tank. Several areas of pitting were found on the tank bottom and are indicated by repair patch areas on the photograph.

FRANCIS PALMS BUILDING • DETROIT, MICHIGAN 48201 • TEL 313-962-5272

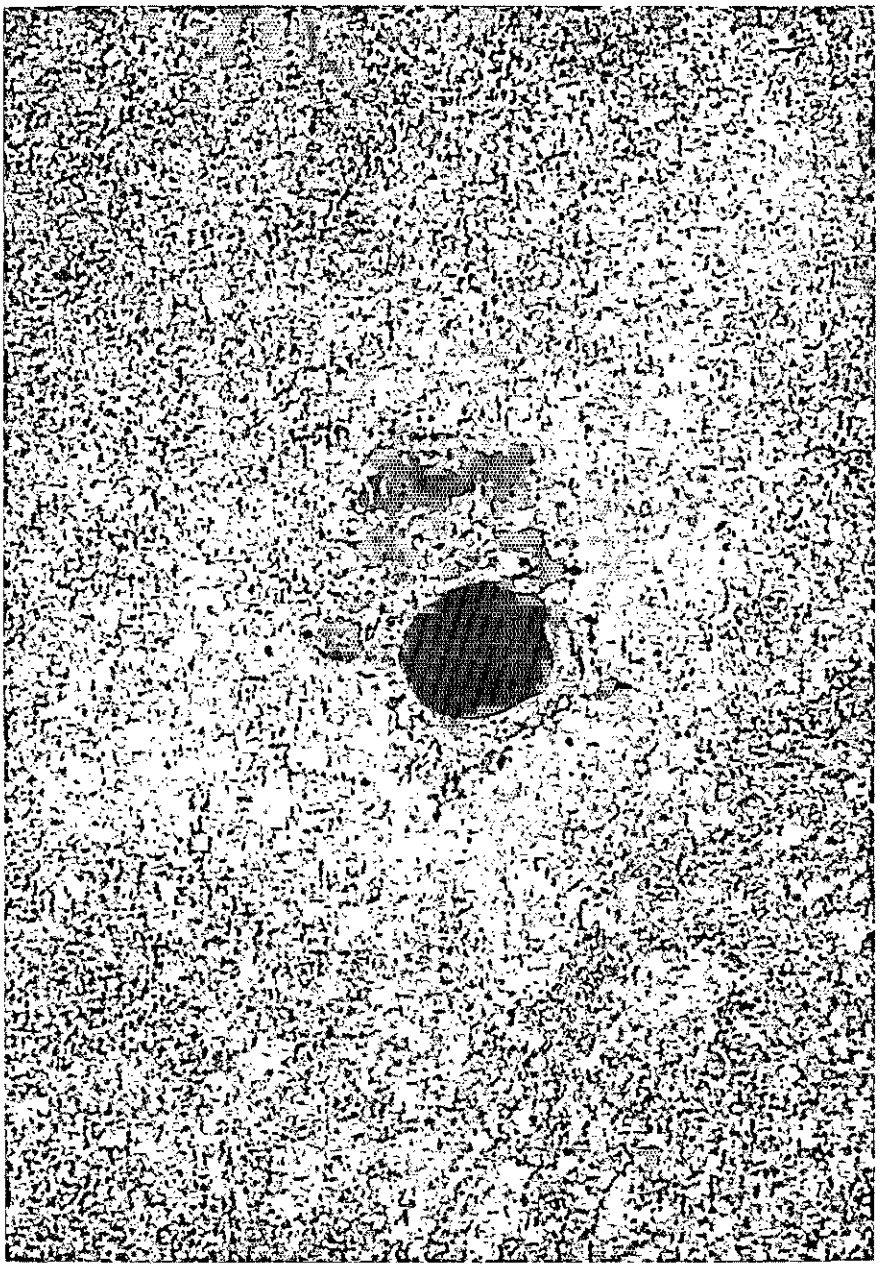

PHOTOGRAPH 1 - INTERNAL CORROSION

FAILURE OF SERVICE STATION

GASOLINE STORAGE TANK

FRANCIS PALMS BUILDING • DETROIT, MICHIGAN 48201 • TEL. 313-962-5272

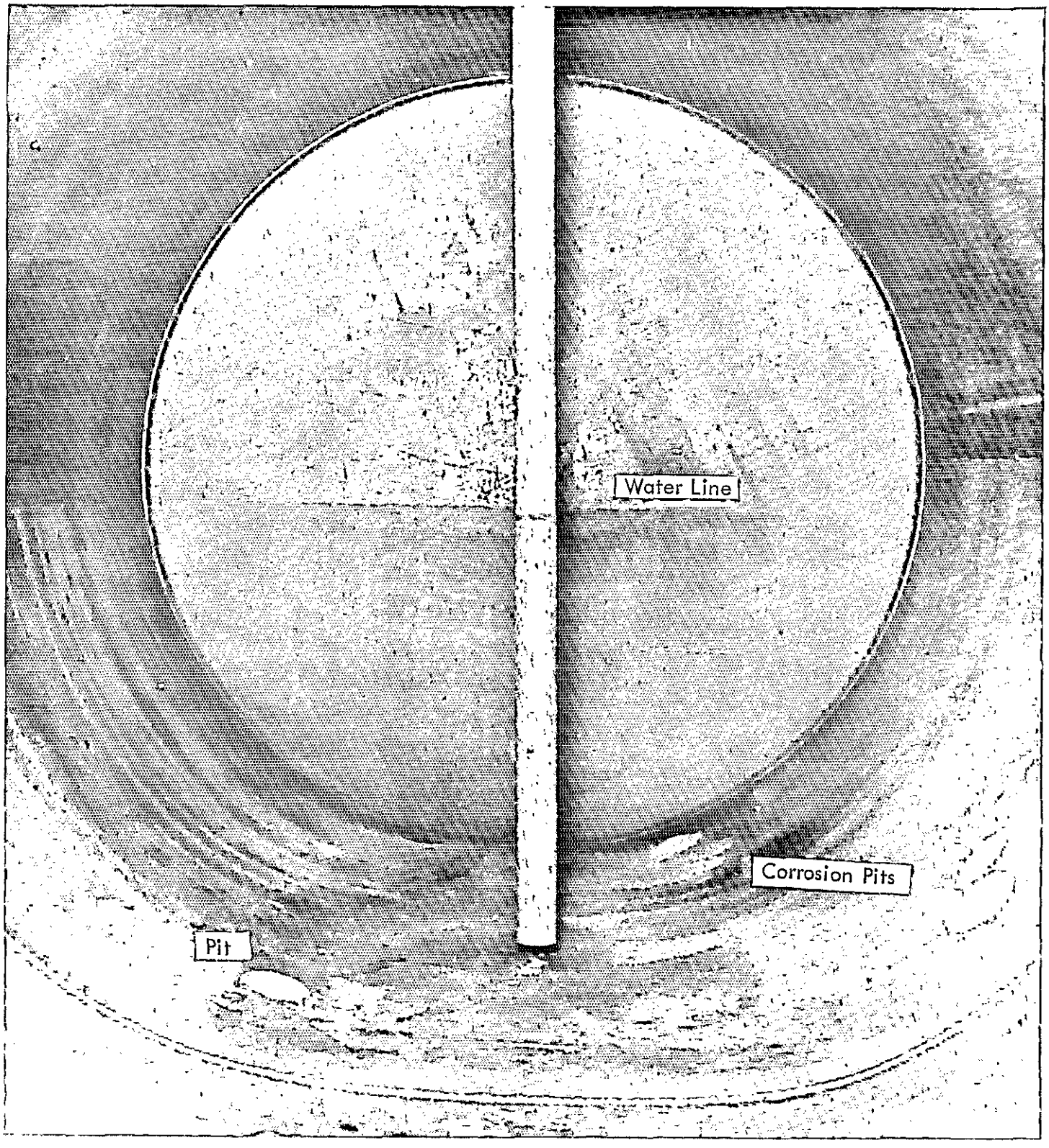

Photograph 2: Interior of Gasoline Storage Tank Failed Due to Internal Corrosion

FRANCIS PALMS BUILDING • DETROIT, MICHIGAN 48201 • TEL 313-962-5272

4.2.4 A major oil company /15/ operating on the West Coast reported that internal corrosion of gasoline storage tanks is sufficient to result in major repairs after 10 years of service. Based on examination of scale, corrosion curves, and other factors, it was concluded that corrosion in gasoline storage tanks takes place almost constantly under the liquid. The rate of corrosion depends on the quantity of water and oxygen absorbed into the gasoline.

4.3 Service Station Tank Maintenance Experience

One of the major service station tank lining and maintenance contractors in the Detroit area reports that many gasoline storage tanks fail due to internal corrosion /19/. This contractor installs linings in 4 or 5 tanks per week in the Detroit area. Approximately 75% of these tanks have leaks that are due to internal corrosion. The type of corrosion failure generally encountered is localized pit-type corrosion. In a typical tank with internal corrosion failures, between 6 to 20 holes are found ranging in size from pinholes to 1/2-inch in diameter.

FRANCIS PALMS BUILDING • DETROIT, MICHIGAN 48201 • TEL 313-962-5272

5. OTHER CONSIDERATIONS

5.1 Fuel Oil Storage Tank Corrosion

Field investigation of domestic fuel oil storage tank leaks showed the failures to be internal corrosion due to localized pitting of water due to breaks in mill scale, sludge deposits, and dirt on the bottom of the tank /16/. The failures were within an area one foot wide extending the length of the tank, which corresponds to the location of a bottom water layer. The failures described showed a marked resemblance to those found in some gasoline storage tanks described in Section 4.2.3.

5.2 Internal Coating of Automobile Gasoline Tanks

The Ford Motor Company has developed a new material known as Petrol Tank Lacquer for coating passenger car fuel tank interiors on cars produced at the Ford Dagenham Works /17/. Prior to this, tern plate and electroplated zinc sheets were used, but caused trouble due to loose corrosion products plugging the carburetor.

Petrol tanks for a range of Rootes Group vehicles are now being given an effective anti-corrosive paint coating inside as well as outside in a new electrophoretic painting plant /18/. These coatings are intended to retard corrosion for the normal life of a car and were not developed to provide 20-year protection.

FRANCIS PALMS BUILDING • DETROIT, MICHIGAN 48201 • TEL 313-962-5272

6. BIBLIOGRAPHY

/1/ P. W. Sherwood, "Bacterial Corrosion in the Refinery", Corrosion Technology, 211-214, (1962) August

/2/ J. Sudbury, O. L. Riggs, and F. J. Radd, "Oxygen Corrosion in the Petroleum Industry", Materials Protection, 8-25 (1962) March

/3/ R. J. DeGray and L. N. Killian, "Bacterial Slime and Corrosion in Petroleum Product Storage", Industrial and Engineering Chemistry, Vol. 52, No. 12, pp 74A-76A (1960) December

/4/ F. L. LaQue and H. R. Copson, Corrosion Resistance of Metals and Alloys, Second Edition, pp 45-47, Reinhold Publishing Corp., New York (1965)

/5/ J. C. Hudson and J. F. Stanners, "The Effect of Climate and Atmospheric Pollution on Corrosion", Journal of Applied Chemistry, 13, p. 86 (1953) February

/6/ P. J. Serada, "Atmospheric Factors Affecting the Corrosion of Steel", Industrial and Engineering Chemistry, Vol. 52, No. 2, page 157 (1960) February

/7/ A. L. Alexander, B. W. Forgeson, H. W. Mundt, C. R. Southwell, and L. J. Thompson, "Corrosion of Metals in Tropical Environments", Part 1, page 11 HRL Report 4929, Naval Research Laboratory, Washington, D.C. (1957) June 19

/8/ L. L. Shrier, Corrosion, Vol. 1, Chapter 2, J. Wiley and Sons, Inc. New York

/9/ F. L. LaQue and H. R. Copson, Corrosion Resistance of Metals and Alloys, Second Edition, p. 325, Reinhold Publishing Corp., New York (1965)

FRANCIS PALMS BUILDING • DETROIT, MICHIGAN 48201 • TEL 313-962-5272

/10/ E. H. Tandy, "Corrosion in Light Oil Storage Tanks", Corrosion, pp 427t-432t, (1957) July

/11/ W. A. Koehler, "Corrosion - What Causes It and How It Happens", Part 2, Corrosion Notebook, American Gas Journal, Inc. pp 6-8 (1964)

/12/ Technical Report, Owens-Corning Fiberglas Corporation, TC/RPL/64/4 (1964)

/13/ Private conversations with oil company personnel and The Hinchman Company

/14/ Private data developed by oil company personnel and The Hinchman Company

/15/ E. H. Tandy, "Inspection of Petroleum Refining Equipment", Corrosion, pp 160-164, (1954) May

/16/ R. Wieland and R. S. Treseder, "Internal Corrosion in Domestic Fuel Oil Tanks", Corrosion, Vol. 10, pp. 401-406, (1954) November

/17/ Corrosion Technology, pp. 32-33 (1964) March

/18/ "Petrol Tanks Now Electropainted", Product Finishing, Vol. 18, No. 5, pp. 72-77 (1965)

/19/ Private conversations with Service Station Tank Maintenance Contractor and The Hinchman Company.

FRANCIS PALMS BUILDING • DETROIT, MICHIGAN 48201 • TEL 313-962-5272

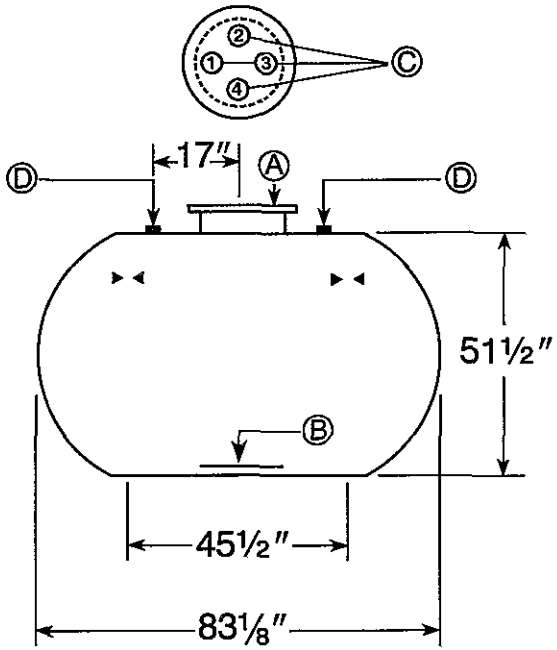

MODEL
DWT-4 550
With
Standard
Fittings
Shown

Double-Wall Tank Short Form Specification:

The contractor shall provide U.L.—labeled Double-Wall Fiberglas® underground storage tanks in sizes and with fittings as shown on the drawings. The tanks shall be manufactured by Owens-Corning Fiberglas.

Tanks shall be tested and installed with pea gravel or approved alternate backfill material according to the current installation instructions (Owens-Corning Fiberglas Publication 3-PE-6304 and 3-PE-12681) provided with the tank.

1. Hold down strap rib locations are indicated by arrows ►◄
2. For information and limitations on accessory locations on tanks, refer to current issue of Pub. No. 3-PE-6312 "Fiberglas Tanks for Fuel Storage"
3. No fitting allowed in position marked *.
4. Fittings are centered on an 8" radius from the center of the manway cover and spaced 90 degrees apart.

FITTING SCHEDULE

MK	SIZE	NO.	ITEM	POSITION
A	22"	1	Manway	Center
B	24" Sq.	1	Deflector Plate	Center
C	4"	4	NPT Fittings (See Note 4)	1,2,3,4 on manway cover
D	4"	2	NPT Cavity Access Fittings with Monitoring Tube	
E				
F				
G				
H				
I				
J				

CUSTOMER		DESTINATION & METHOD				
RECOMMENDED SERVICE						DRWG NO.
QUANTITY	MODEL **DWT-4 550**	ACTUAL CAPACITY **548 Gallons**				
APPROX. WEIGHT **650 Lbs.**	APPROX. CAVITY VOLUME **50 Gallons**	CUSTOMER DRAWING NO.				
PREPARED BY		TELEPHONE	NO.	REVISION	DATE CHKD	

OWENS/CORNING FIBERGLAS TRADEMARK®

Pub. No. 15-PE-12684 Printed in U.S.A., October, 1984

Copyright © 1984 Owens-Corning Fiberglas Corporation

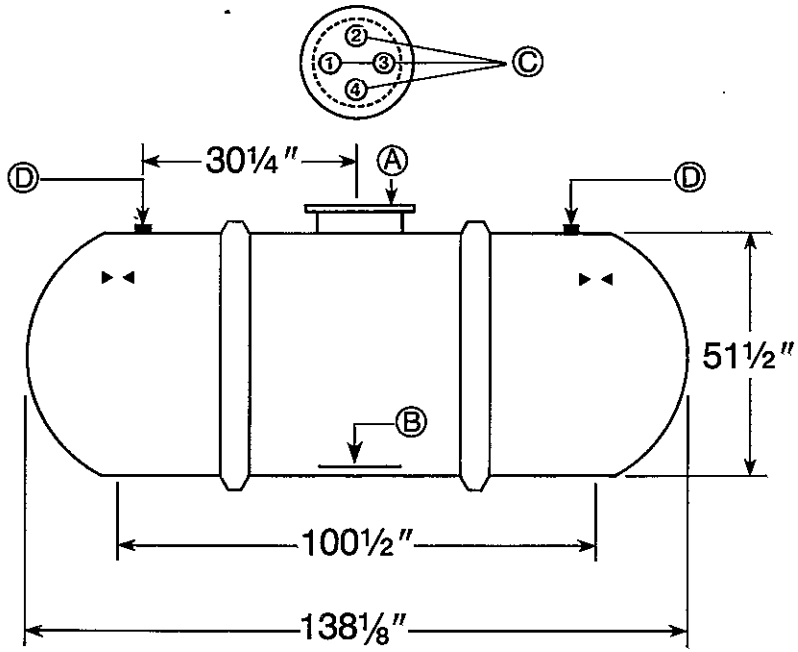

MODEL
DWT-4 1000
With
Standard
Fittings
Shown

Double-Wall Tank Short Form Specification:

The contractor shall provide U.L.—labeled Double-Wall Fiberglas® underground storage tanks in sizes and with fittings as shown on the drawings. The tanks shall be manufactured by Owens-Corning Fiberglas.

Tanks shall be tested and installed with pea gravel or approved alternate backfill material according to the current installation instructions (Owens-Corning Fiberglas Publication 3-PE-6304 and 3-PE-12681) provided with the tank.

1. Hold down strap rib locations are indicated by arrows ►◄
2. For information and limitations on accessory locations on tanks, refer to current issue of Pub. No. 3-PE-6312 "Fiberglas Tanks for Fuel Storage"
3. No fitting allowed in position marked*.
4. Fittings are centered on an 8″ radius from the center of the manway cover and spaced 90 degrees apart.

FITTING SCHEDULE

MK	SIZE	NO.	ITEM	POSITION
A	22″	1	Manway	Center
B	24″ Sq.	1	Deflector Plate	Center
C	4″	4	NPT Fittings (See Note 4)	1,2,3,4 on manway cover
D	4″	2	NPT Cavity Access Fittings with Monitoring Tube	
E				
F				
G				
H				
I				
J				

CUSTOMER		DESTINATION & METHOD			
RECOMMENDED SERVICE					DRWG NO.
QUANTITY	MODEL **DWT-4 1000**	ACTUAL CAPACITY **971 Gallons**			
APPROX. WEIGHT **950 Lbs.**	APPROX. CAVITY VOLUME **100 Gallons**	CUSTOMER DRAWING NO.			
PREPARED BY		TELEPHONE	NO.	REVISION	DATE CHKD

OWENS/CORNING FIBERGLAS TRADEMARK®

Pub. No. 15-PE-12684: Printed in U.S.A., October, 1984
Copyright © 1984 Owens-Corning Fiberglas Corporation

MODEL
DWT-2 4000
With
Standard
Fittings
Shown

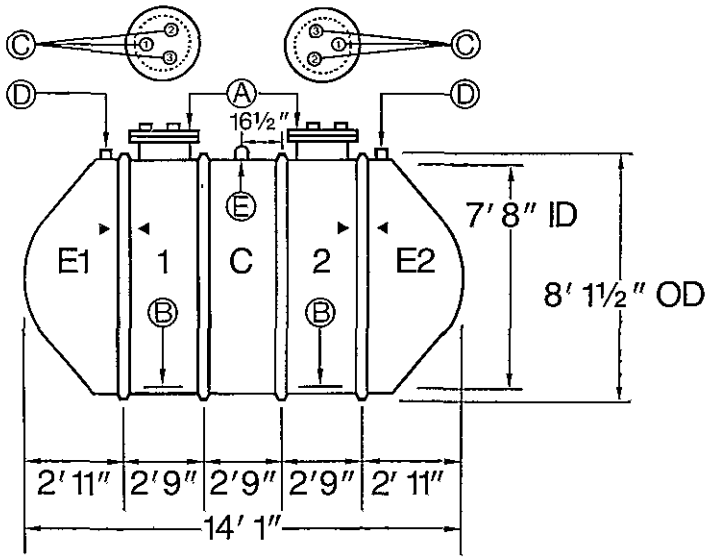

Double-Wall Tank Short Form Specification:

The contractor shall provide U.L.—labeled Double-Wall Fiberglas® underground storage tanks in sizes and with fittings as shown on the drawings. The tanks shall be manufactured by Owens-Corning Fiberglas.

Tanks shall be tested and installed with pea gravel or approved alternate backfill material according to the current installation instructions (Owens-Corning Fiberglas Publication 3-PE-6304 and 3-PE-12681) provided with the tank.

1. Hold down strap rib locations are indicated by arrows ►◄
2. For information and limitations on accessory locations on tanks, refer to current issue of Pub. No. 3-PE-6312 "Fiberglas Tanks for Fuel Storage"
3. No fitting allowed in position marked*.
4. Fittings are centered on an 8" radius from the center of the manway cover and spaced 120 degrees apart.

FITTING SCHEDULE

MK	SIZE	NO.	ITEM	POSITION
A	22"	2	Manway	1, 2
B	24" Sq.	2	Deflector Plate	1, 2
C	4"	6	NPT Fittings (See Note 4)	1, 2, 3 on each manway cover
D	4"	2	NPT Cavity Access Fitting with Monitoring Tube	E1, E2
E	—	1	Lift Lug	center
F				
G				
H				
I				
J				

CUSTOMER		DESTINATION & METHOD			
RECOMMENDED SERVICE					DRWG NO.
QUANTITY	MODEL **DWT-2 4000**	ACTUAL CAPACITY **4030 Gallons**			
APPROX. WEIGHT **2600 Lbs.**	APPROX. CAVITY VOLUME **380 Gallons**	CUSTOMER DRAWING NO.			
PREPARED BY		TELEPHONE	NO.	REVISION	DATE CHKD

Pub. No. 15-PE-1[illegible].8 Litho in U.S.A., October, 1984

Copyright © 1984 Owens-Corning Fiberglas Corporation

MODEL
DWT-2 6000
With
Standard
Fittings
Shown

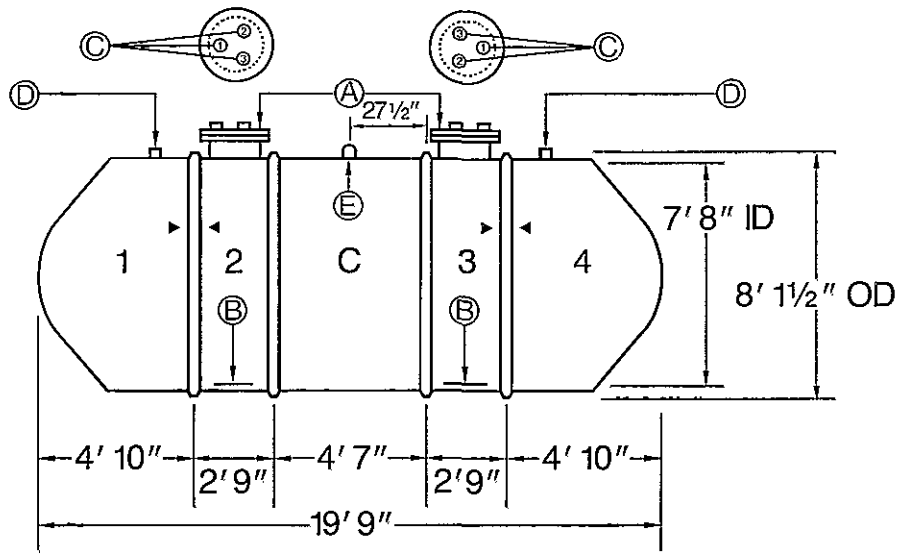

1. Hold down strap rib locations are indicated by arrows ► ◄
2. For information and limitations on accessory locations on tanks, refer *to current issue of Pub. No. 3-PE-6312 "Fiberglas Tanks for Fuel Storage"*
3. No fitting allowed in position marked *
4. Fittings are centered on an 8" radius from the center of the manway cover *and spaced 120 degrees apart.*

FITTING SCHEDULE

MK	SIZE	NO.	ITEM	POSITION
A	22"	2	Manway	2, 3
B	24" Sq.	2	Deflector Plate	2, 3
C	4"	6	NPT Fittings (See Note 4)	1, 2, 3 on each manway cover
D	4"	2	NPT Cavity Access Fitting with Monitoring Tube	1, 4
E	—	1	Lift Lug	center
F				
G				
H				
I				
J				

CUSTOMER		DESTINATION & METHOD			
RECOMMENDED SERVICE					DRWG NO.
QUANTITY	MODEL **DWT-2 6000**	ACTUAL CAPACITY **5929 Gallons**			
APPROX. WEIGHT **3200 Lbs.**	APPROX. CAVITY VOLUME **450 Gallons**	CUSTOMER DRAWING NO.			
PREPARED BY		TELEPHONE	NO.	REVISION	DATE CHKD

Double-Wall Tank Short Form Specification:

The contractor shall provide U.L.—labeled Double-Wall Fiberglas® underground storage tanks in sizes and with fittings as shown on the drawings. The tanks shall be manufactured by Owens-Corning Fiberglas.

Tanks shall be tested and installed with pea gravel or approved alternate backfill material according to the current installation instructions (Owens-Corning Fiberglas Publication 3-PE-6304 and 3-PE-12681) provided with the tank.

Pub. No. 15-PE-1[illegible]:9 Litho in U.S.A., October, 1984
Copyright © 1984 Owens-Corning Fiberglas Corporation

MODEL
DWT-2 8000
With
Standard
Fittings
Shown

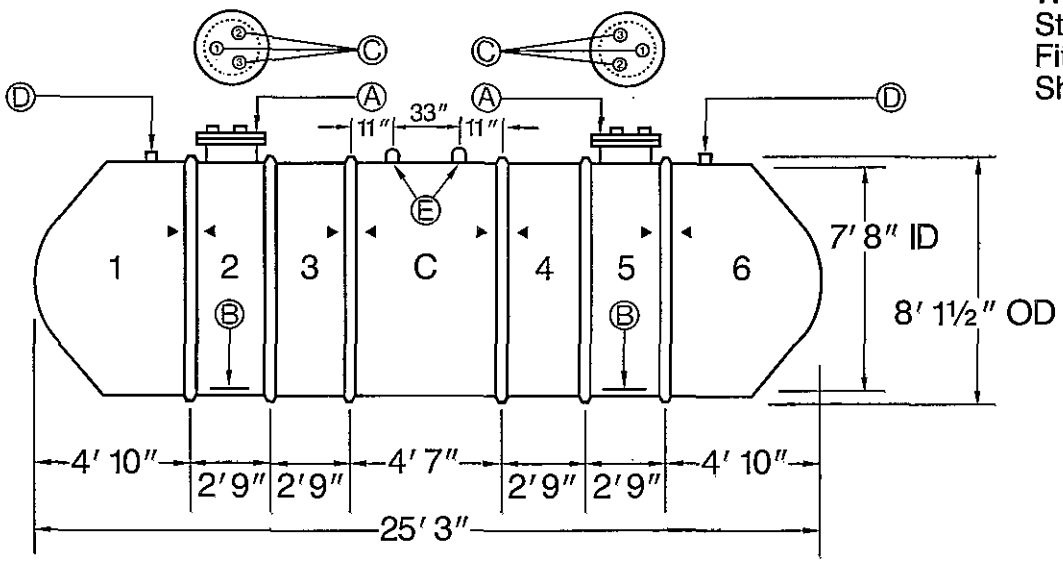

1. Hold down strap rib locations are indicated by arrows ► ◄
2. For information and limitations on accessory locations on tanks, refer to current issue of Pub. No. 3-PE-6312 "Fiberglas Tanks for Fuel Storage"
3. No fitting allowed in position marked*.
4. Fittings are centered on an 8" radius from the center of the manway cover and spaced 120 degrees apart.

FITTING SCHEDULE

MK	SIZE	NO.	ITEM	POSITION
A	22"	2	Manway	2, 5
B	24" Sq.	2	Deflector Plate	2, 5
C	4"	6	NPT Fittings (See Note 4)	1, 2, 3 on each manway cover
D	4"	2	NPT Cavity Access Fitting with Monitoring Tube	1, 6
E	—	2	Lift Lugs	center
F				
G				
H				
I				
J				

CUSTOMER	DESTINATION & METHOD
RECOMMENDED SERVICE	DRWG NO.
QUANTITY	MODEL: DWT-2 8000
ACTUAL CAPACITY: 7830 Gallons	
APPROX. WEIGHT: 4400 Lbs.	APPROX. CAVITY VOLUME: 540 Gallons
CUSTOMER DRAWING NO.	
PREPARED BY	TELEPHONE

NO.	REVISION	DATE CHKD

Double-Wall Tank Short Form Specification:

The contractor shall provide U.L.—labeled Double-Wall Fiberglas® underground storage tanks in sizes and with fittings as shown on the drawings. The tanks shall be manufactured by Owens-Corning Fiberglas.

Tanks shall be tested and installed with pea gravel or approved alternate backfill material according to the current installation instructions (Owens-Corning Fiberglas Publication 3-PE-6304 and 3-PE-12681) provided with the tank.

Pub. No. 15-PE-1[illegible]10 Litho in U.S.A., October, 1984

Copyright © 1984 Owens-Corning Fiberglas Corporation

MODEL
DWT-2 10000
With
Standard
Fittings
Shown

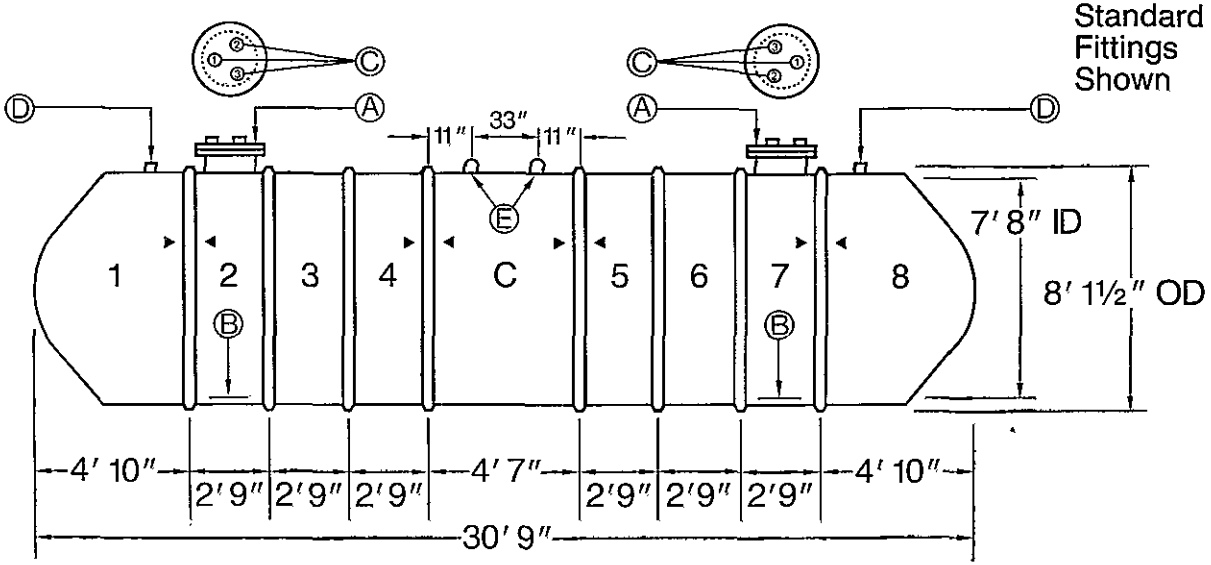

1. Hold down strap rib locations are indicated by arrows ►◄
2. For information and limitations on accessory locations on tanks, refer to current issue of Pub. No. 3-PE-6312 "Fiberglas Tanks for Fuel Storage"
3. No fitting allowed in position marked *.
4. Fittings are centered on an 8" radius from the center of the manway cover and spaced 120 degrees apart.

FITTING SCHEDULE

MK	SIZE	NO.	ITEM	POSITION
A	22"	2	Manway	2, 7
B	24" Sq.	2	Deflector Plate	2, 7
C	4"	6	NPT Fittings (See Note 4)	1, 2, 3 on each manway cover
D	4"	2	NPT Cavity Access Fitting with Monitoring Tube	1, 8
E	—	2	Lift Lugs	center
F				
G				
H				
I				
J				

CUSTOMER		DESTINATION & METHOD			
RECOMMENDED SERVICE					DRWG NO.
QUANTITY	MODEL **DWT-2 10000**	ACTUAL CAPACITY **9730 Gallons**			
APPROX. WEIGHT **5500 Lbs.**	APPROX. CAVITY VOLUME **620 Gallons**	CUSTOMER DRAWING NO.			
PREPARED BY		TELEPHONE	NO.	REVISION	DATE CHKD

Double-Wall Tank Short Form Specification:

The contractor shall provide U.L.—labeled Double-Wall Fiberglas® underground storage tanks in sizes and with fittings as shown on the drawings. The tanks shall be manufactured by Owens-Corning Fiberglas.

Tanks shall be tested and installed with pea gravel or approved alternate backfill *material according to the current installation* instructions (Owens-Corning Fiberglas Publication 3-PE-6304 and 3-PE-12681) provided with the tank.

Pub. No. 15-PE-[illegible]11 Litho in U.S.A., October, 1984

Copyright © 1984 Owens-Corning Fiberglas Corporation

MODEL
DWT-2 12000
With
Standard
Fittings
Shown

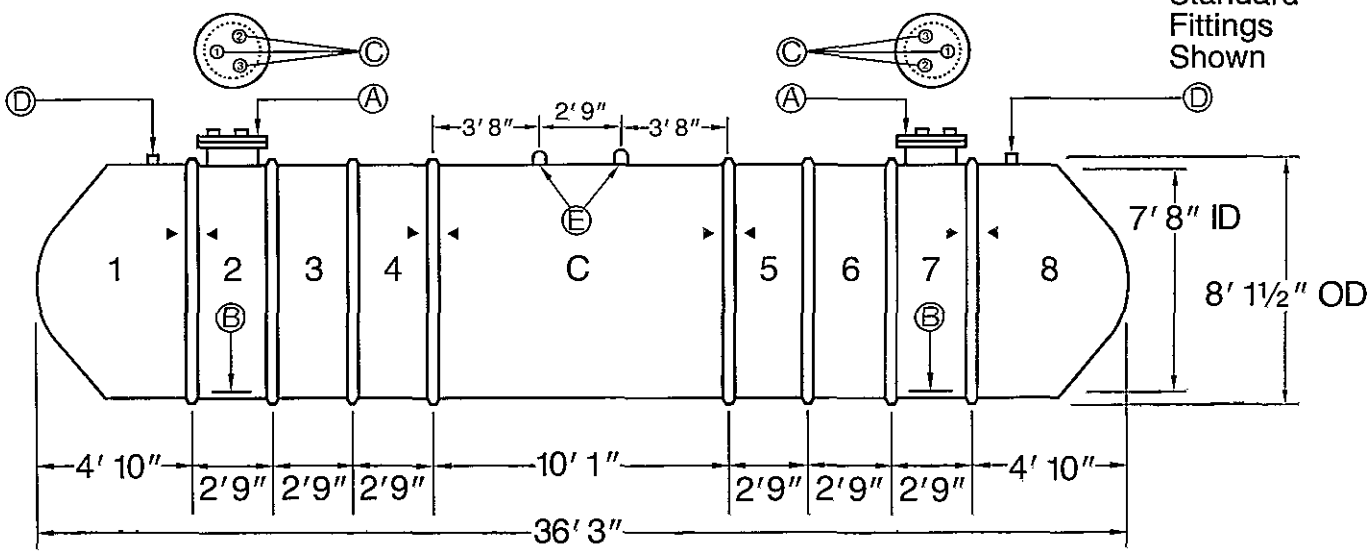

1. Hold down strap rib locations are indicated by arrows ► ◄
2. For information and limitations on accessory locations on tanks, refer to current issue of Pub. No. 3-PE-6312 "Fiberglas Tanks for Fuel Storage"
3. No fitting allowed in position marked *.
4. Fittings are centered on an 8" radius from the center of the manway cover and spaced 120 degrees apart.

FITTING SCHEDULE

MK	SIZE	NO.	ITEM	POSITION
A	22"	2	Manway	2, 7
B	24" Sq.	2	Deflector Plate	2, 7
C	4"	6	NPT Fittings (See Note 4)	1, 2, 3 on each manway cover
D	4"	2	NPT Cavity Access Fitting with Monitoring Tube	1, 8
E	—	2	Lift Lugs	center
F				
G				
H				
I				
J				

CUSTOMER		DESTINATION & METHOD			
RECOMMENDED SERVICE					DRWG NO.
QUANTITY	MODEL **DWT-2 12000**	ACTUAL CAPACITY **11630 Gallons**			
APPROX. WEIGHT **7000 Lbs.**	APPROX. CAVITY VOLUME **700 Gallons**	CUSTOMER DRAWING NO.			
PREPARED BY		TELEPHONE	NO.	REVISION	DATE CHKD

Double-Wall Tank Short Form Specification:

The contractor shall provide U.L.—labeled Double-Wall Fiberglas® underground storage tanks in sizes and with fittings as shown on the drawings. The tanks shall be manufactured by Owens-Corning Fiberglas.

Tanks shall be tested and installed with pea gravel or approved alternate backfill material according to the current installation instructions (Owens-Corning Fiberglas Publication 3-PE-6304 and 3-PE-12681) provided with the tank.

Pub. No. 15-PE-12[illegible]2 Litho in U.S.A., October, 1984

Copyright © 1984 Owens-Corning Fiberglas Corporation

OWENS/CORNING FIBERGLAS

High-Strength Internal Ribs With Engineered Flow Channels For 360° Monitoring

The Double-Wall Tank Model DWT-2

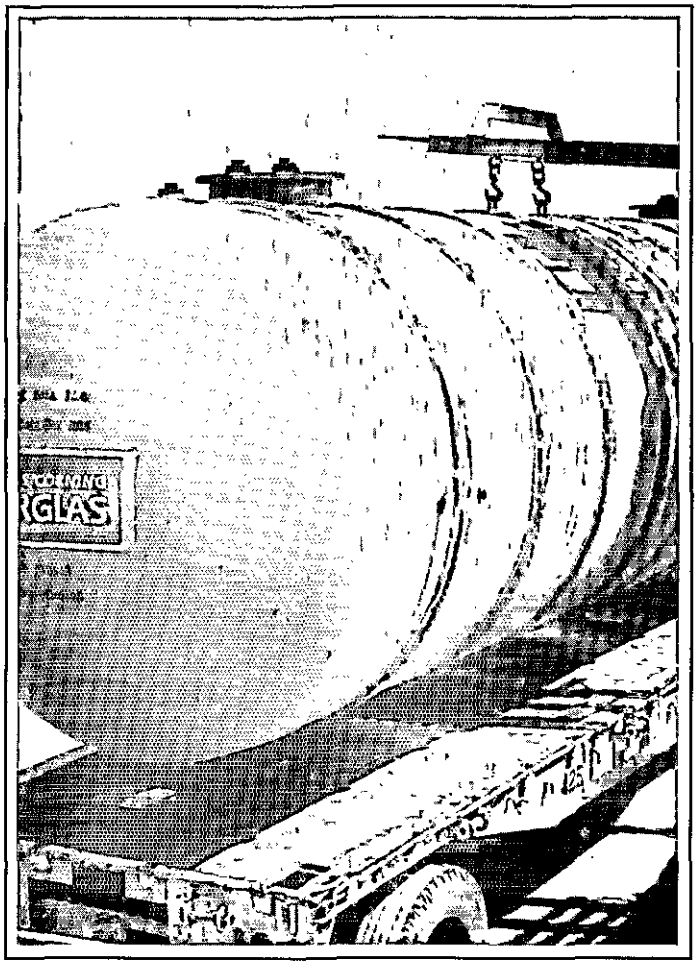

Specifications.
Model DWT-2

Nominal Capacity (gallons)	Actual Capacity (gallons)	Number of 22" Manways	Number of 4" NPT Fittings (#/tank)	Nominal Weight (lbs)	Volume Annular Space (gallons)	(L) Overall Length
Less than 4,000 gallons—Consult your OCF sales representative for availability.						
4,000	4,080	2	6	2,600	380	14'-1"
6,000	5,984	2	6	3,400	450	19'-9"
8,000	7,830	2	6	4,200	540	25'-3"
10,000	9,730	2	6	5,000	620	30'-9"
12,000	11,630	2	6	6,000	700	36'-13"
Over 12,000 gallons—consult your OCF sales representative for availability.						

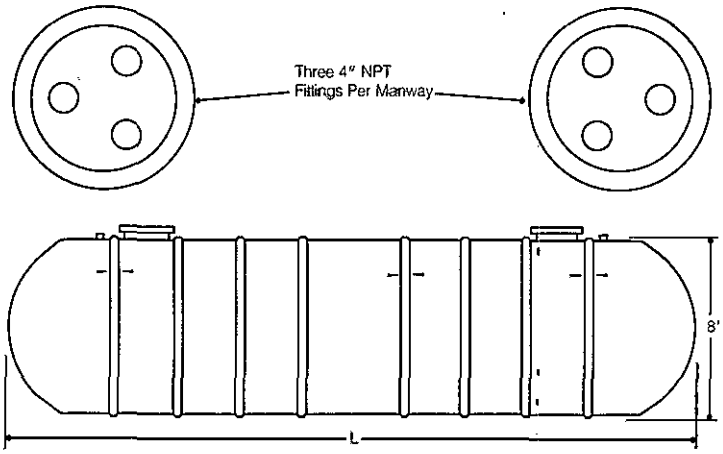

Installation.

Owens-Corning maintains a network of over 300 independent contractors nationwide specifically trained for underground tank installations.

The Owens-Corning double-wall tank is installed using the same backfill and installation procedures as required for the single-wall tank with the single exception that Owens-Corning double-wall tanks must be unloaded and positioned with a crane. Request: Underground Tank Installation Instructions, Owens-Corning Publication No. 3-PE-6304 and Publication No. 3-PE-12681.

Call today for additional information or help with your specifications.

Atlanta, Georgia 30328
1155 Hammond Drive
Building C, Suite 3210
(404) 956-1465

Braintree, Massachusetts 02184
25 Braintree Hill Park, Suite 305
(617) 849-1340

Cleveland, Ohio 44129
5700 Pearl Rd., Suite 104
(216) 884-9440

Dallas, Texas 75230
12880 Hillcrest, Suite 100
(214) 233-9241

Ft. Lauderdale, Florida 33068
541 South 441, Suite 3
(305) 975-6700

Seabrook, Maryland 20706
7501 Forbes Blvd., Suite 102
(303) 390-6900

Houston, Texas 77060
256 North Belt East, Suite 100
(713) 445-6100

Los Angeles, California 90040
5933 Telegraph Road
(213) 724-5383

Northbrook, Illinois 60062
2215 Sanders Road
(312) 480-4300

Overland Park, Kansas 66210
55 Corporate Woods, Suite 200
9300 W. 110th Street
(913) 341-9100

Scarsdale, New York 10583
700 White Plains Road
(914) 472-3900

South San Francisco, California 94080
477 Forbes Blvd.
(415) 873-7950

Tampa, Florida 33609
4950 W. Kennedy Blvd., Suite 301
(813) 877-7516

Toledo, Ohio 43659
Fiberglas Tower, OB/7
(419) 248-7000

Wayne, Pennsylvania 19087
900 W. Valley Rd., Suite 1101
(215) 688-8650

OWENS/CORNING FIBERGLAS

OWENS-CORNING FIBERGLAS CORPORATION
Non-Corrosive Products Division
Fiberglas Tower, Toledo, Ohio 43659

Pub. No. 3-PE-12703-A Litho U.S.A. October, 1984

Copyright © 1984 Owens-Corning Fiberglas Corporation

UL 1316

STANDARD for SAFETY

GLASS-FIBER-REINFORCED PLASTIC UNDERGROUND STORAGE TANKS FOR PETROLEUM PRODUCTS

AN INDEPENDENT LABORATORY · UL · TESTING FOR PUBLIC SAFETY

UNDERWRITERS LABORATORIES INC.©

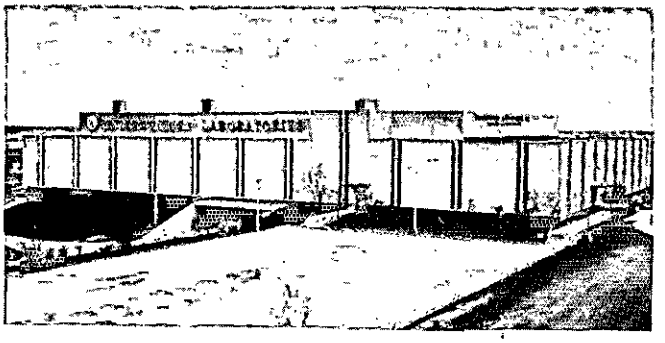

Northbrook, Illinois

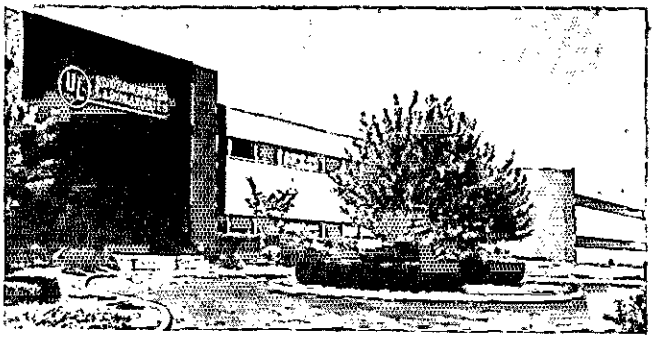

Melville, New York

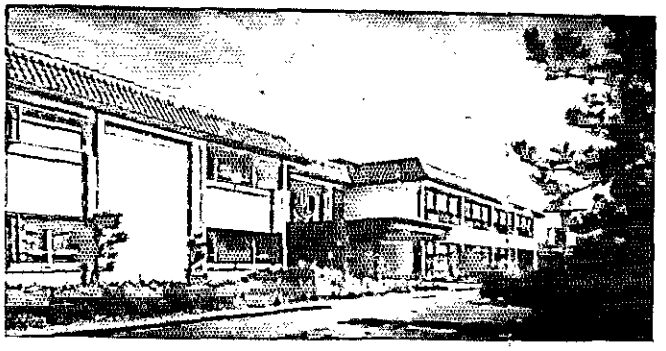

Santa Clara, California

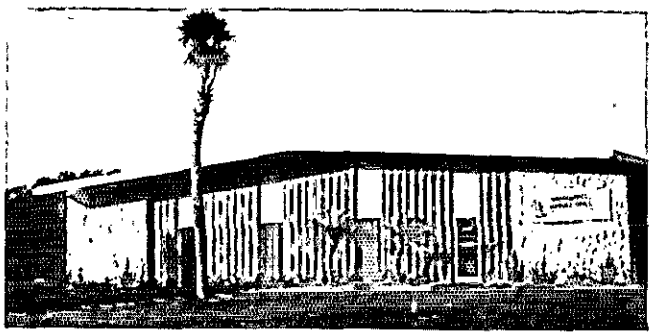

Tampa, Florida

UNDERWRITERS LABORATORIES INC.

AN INDEPENDENT NOT-FOR-PROFIT ORGANIZATION
TESTING FOR PUBLIC SAFETY

Underwriters Laboratories Inc., founded in 1894, is chartered as a not-for-profit organization without capital stock, under the laws of the State of Delaware, to establish, maintain, and operate laboratories for the examination and testing of devices, systems and materials to determine their relation to hazards to life and property.

A complete description of the organization, purposes, and methods of Underwriters Laboratories Inc. is given in a separate pamphlet entitled "TESTING FOR PUBLIC SAFETY."

The names of manufacturers who have demonstrated an ability to produce products meeting UL requirements are published annually in the following Product Directories.

- Building Materials
- Fire Protection Equipment
- Fire Resistance
- Recognized Component
- Electrical Appliance and Utilization Equipment
- Electrical Construction Materials
- Hazardous Location Equipment
- General Information From Electrical Construction Materials Directory
- Marine Products
- Automotive, Burglary Protection, and Mechanical Equipment
- Gas and Oil Equipment
- Supplements to Directories

The price list for these publications and ordering information may be obtained upon request from UL, Publications Stock, 333 Pfingsten Road, Northbrook, Illinois 60062.

A Catalog of UL Standards for Safety with costs and ordering information is also available from this office.

UNDERWRITERS LABORATORIES INC.

an independent, not-for-profit organization testing for public safety

1285 Walt Whitman Road, Melville, L.I., N.Y. 11747
1655 Scott Boulevard, Santa Clara, Calif. 95050
2602 Tampa East Blvd., Tampa, Fla. 33619
333 Pfingsten Road, Northbrook, Ill. 60062

July 1, 1983

STANDARD FOR
GLASS-FIBER-REINFORCED PLASTIC UNDERGROUND STORAGE TANKS
FOR PETROLEUM PRODUCTS

UL 1316, FIRST EDITION

Accompanying this transmittal notice is a copy of the first edition of UL 1316.

THIS EDITION OF THE STANDARD IS NOW IN EFFECT EXCEPT FOR PARAGRAPHS 6.1, 18.5, AND 19.1, WHICH BECOME EFFECTIVE OCTOBER 19, 1983 AS INDICATED IN THE SMALL PRINT NOTE FOLLOWING THE AFFECTED ITEM.

New product submittals made prior to a specified future effective date will be judged under all of the requirements in this standard unless the applicant specifically requests that the product be judged under the current requirements. However, should the applicant elect this option, it should be noted that compliance with all the requirements in this standard will be required as a condition of continued Listing and Follow-Up Service after the effective date and understanding of this should be signified in writing.

The requirements in this standard are substantially in accordance with UL's bulletins on this subject dated January 27, 1982, and April 14, 1983.

Revised and/or additional pages may be issued from time-to-time.

UL 1316

STANDARD FOR GLASS-FIBER-REINFORCED PLASTIC UNDERGROUND STORAGE TANKS FOR PETROLEUM PRODUCTS

FIRST EDITION

First Impression . . . . . July 1, 1983

COPYRIGHT © 1983 UNDERWRITERS LABORATORIES INC.

UL's Standards for Safety are copyrighted to protect UL's publication rights, not to restrict their use in product design or evaluation. See paragraph E of the Foreword.

TABLE OF CONTENTS

Foreword 4
General 5
1. Scope 5
2. General 5
Construction 5
3. General 5
4. Pipe Connections 5
5. Manholes 6
6. Deflection Plates 6
Performance 6
7. General 6
8. Leakage Test 6
9. Strength of Pipe Fittings Tests 6
10. Strength of Lifting Fittings Tests 7
11. Water-Load Test 7
12. External Pressure Test 7
13. Internal Pressure Test 7
14. Physical Properties of Materials Tests 8
15. Earth-Load Test 9
Manufacturing and Production Tests 9
16. Leakage Test 9
17. Internal Vacuum Test 10
Marking 10
18. General 10
19. Installation Instructions 10

FOREWORD

A. This Standard contains basic requirements for products covered by Underwriters Laboratories Inc. (UL) under its Follow-Up Service for this category within the limitations given below and in the Scope section of this Standard. These requirements are based upon sound engineering principles, research, records of tests and field experience, and an appreciation of the problems of manufacture, installation, and use derived from consultation with and information obtained from manufacturers, users, inspection authorities, and others having specialized experience. They are subject to revision as further experience and investigation may show is necessary or desirable.

B. The observance of the requirements of this Standard by a manufacturer is one of the conditions of the continued coverage of the manufacturer's product.

C. A product which complies with the text of this Standard will not necessarily be judged to comply with the Standard if, when examined and tested, it is found to have other features which impair the level of safety contemplated by these requirements.

D. A product employing materials or having forms of construction differing from those detailed in the requirements of this Standard may be examined and tested according to the intent of the requirements and, if found to be substantially equivalent, may be judged to comply with the Standard.

E. UL, in performing its functions in accordance with its objectives, does not assume or undertake to discharge any responsibility of the manufacturer or any other party. The opinions and findings of UL represent its professional judgment given with due consideration to the necessary limitations of practical operation and state of the art at the time the Standard is processed. UL shall not be responsible to anyone for the use of or reliance upon this Standard by anyone. UL shall not incur any obligation or liability for damages, including consequential damages, arising out of or in connection with the use, interpretation of, or reliance upon this Standard.

F. Many tests required by the Standards of UL are inherently hazardous and adequate safeguards for personnel and property shall be employed in conducting such tests.

GENERAL

1. Scope

1.1 These requirements cover spherical or horizontal cylindrical, atmospheric-type tanks of glass-fiber-reinforced plastic (FRP) that are intended for the underground storage of petroleum-based flammable and combustible liquids.

1.2 These requirements do not cover tanks for use with alcohol or alcohol-blended fuels. Such tanks are covered by these and additional requirements.

1.3 These tanks are completely assembled and tested for leakage before shipment.

1.4 These tanks are intended for installation and use in accordance with the Standard for the Installation of Oil-Burning Equipment, ANSI/NFPA 31, the Flammable and Combustible Liquids Code, ANSI/NFPA 30; and the manufacturer's instructions.

1.5 These requirements do not cover optional accessories for these tanks, such as heating coils or hotwells; nor do they cover compartmented tanks.

2. General

2.1 If a value for measurement is followed by a value in other units in parentheses, the second unit may be only approximate. The first stated value is the requirement.

2.2 A component of a product covered by this standard shall comply with the requirements for that component and shall be used in accordance with its recognized rating and other limitations of use. A component need not comply with a specific requirement that:

A. Involves a feature or characteristic not needed in the application of the component in a product covered by this standard, or

B. Is superseded by a requirement in this standard.

CONSTRUCTION

3. General

3.1 A tank shall be provided with one or more lugs for lifting that are attached to the tank or can be attached to a fitting on the tank. Also, see Strength of Lifting Fittings Tests, Section 10.

3.2 A tank shall be capable of being anchored.

4. Pipe Connections

4.1 A fitting for pipe connection shall be a standard threaded pipe coupling (see the Standard for Welded and Seamless Wrought Steel Pipe, ANSI B36.10–1979), a threaded flange, a standard half pipe nipple, or a bolted and gasketed flanged connection. The connection shall be bonded directly to the tank.

4.2 All openings in a tank shall be located in the top. They shall be located on the longitudinal centerline of the top if the tank is cylindrical. If the tank is spherical, the openings shall be located on the vertical centerline of the tank.

Exception: If the application of a tank is such that openings in the top for pipe connection are required to be grouped, the openings may be located not more than 12 inches (305 mm) from the longitudinal centerline of the top of a cylindrical tank or the vertical centerline of a spherical tank, provided the upper end of each pipe coupling or other fitting for pipe connection terminates above the top of the shell.

4.3 An opening in a tank shall be closed with a wooden plug, metal cover, or the equivalent, to protect the threads and exclude foreign matter while the tank is in storage or in transit.

4.4 A tank shall have a fitting of a size not less than that specified in Table 4.1 for attachment of a vent pipe.

4.5 An opening for connection of a vent pipe shall not be located in a manhole cover.

Exception: In a spherical tank, all openings may be grouped together in a manhole cover.

TABLE 4.1
SIZE OF VENT-PIPE FITTING

Tank Capacity		Nominal Pipe Size, Inches[a]
U. S. Gallons	Liters	
0–500	0–1,893	1-1/4
501–3,000	1,896–11,356	1-1/2
3,001–10,000	11,360–37,854	2
10,001–20,000	37,858–75,708	2-1/2
20,001–35,000	75,712–132,489	3
35,001–50,000	132,493–189,270	4

a Nominal pipe size specifications are in accordance with the Standard for Welded and Seamless Wrought Steel Pipe, ANSI B36.10—1979.

5. Manholes

5.1 A manhole, if provided in a tank, shall be located above the highest normal liquid level and shall be of the bolted-cover type.

5.2 A manhole-cover joint shall be provided with a gasket at least 1/8 inch (3.2 mm) thick of material acceptable for use with the liquid to be stored.

6. Deflection Plates

6.1 A tank shall have a deflection plate of steel at least 0.053 inch (1.35 mm) thick or aluminum at least 1/8 inch (3.2 mm) thick. The deflector plate shall be at least 9 inches (229 mm) wide, and at least 1 square foot (0.009 m^2) in area under (1) each opening, or (2) one opening that is marked as specified in paragraph 18.5.

Paragraph 6.1 effective October 19, 1983

PERFORMANCE

7. General

7.1 One sample of a tank is to be subjected to each of the tests described in Sections 8–13. However, the same sample need not be subjected to all tests. If a manufacturer produces a line of cylindrical tanks that differ only in shell length, the longest tank may be tested as representative of the entire line. For a line of spherical tanks that differ only in diameter, only the largest diameter tank need be tested.

8. Leakage Test

8.1 A tank, including fittings, shall be tested as described in paragraph 8.2 and shall not leak.

8.2 The tank is to be pressurized for 5 minutes to the applicable value specified in Table 8.1, and the entire surface is to be brushed with a leak-detection fluid. Continuous formation of bubbles at any location on the tank surface is evidence of leakage.

TABLE 8.1
LEAKAGE-TEST PRESSURES

Maximum Diameter of Tank, Feet (m)	Applied Pressure, Psig (kPa)
10 (3.0) or less	5 (34)
More than 10	3 (21)

9. Strength of Pipe Fittings Tests

Torque

9.1 A length of pipe shall be threaded into a fitting for pipe connection and shall be tightened to the torque specified in Table 9.1. The fitting shall not crack or split and the threads shall not strip.

TABLE 9.1
TORQUES ON PIPE FITTINGS

Nominal Pipe Size, Inches[a]	Torque, Pound-Inches (N·m)
3/4	2000 (226)
1	2400 (271)
1-1/4	2900 (328)
1-1/2	3100 (350)
2	3300 (373)
2-1/2	3500 (395)
3	3600 (407)
3-1/2	3700 (418)
4	3800 (429)
6	4200 (475)
8	4600 (520)

a Nominal pipe size specifications are in accordance with the Standard for Welded and Seamless Wrought Steel Pipe, ANSI B36.10—1979.

Bending Moment

9.2 The bond between a fitting for pipe connection and the tank shall be subjected to a bending moment of 2000 pound-feet (2700 N·m) as described in paragraph 9.3. The bond shall not be damaged.

9.3 A 4-foot (1.2-m) length of Schedule 40 steel pipe is to be threaded into the fitting. A force is then to be applied to the top of the pipe. For a cylindrical tank, the force is first to be applied parallel to the longitudinal axis of the tank, and then transverse to the longitudinal axis of the tank. For a spherical tank, the force is first to be applied in any one direction and then perpendicular to the direction in which the force was first applied. The applied force is to be increased so that the bending moment is increased from zero to 2000 pound-feet (2712 N·m) in 250 pound-feet (339 N·m) increments. If the Schedule 40 pipe bends before the required bending moment is reached, the test is to be stopped and the fitting is to be examined for compliance with the requirements specified in paragraph 9.2.

Leakage

9.4 After each of the tests specified in paragraphs 9.1 and 9.2, the tank is to be subjected to the Leakage Test, Section 8.

10. Strength of Lifting Fittings Tests

10.1 A fitting intended to be used to lift and move a tank shall be subjected for 1 second to a load equal to twice that imposed by lifting the empty tank. If more than one fitting is provided on a tank, the load is to be divided between the fittings in proportion to the loads to which they are subjected by lifting the tank as intended. The fitting shall not be damaged or damage the tank.

10.2 Following the test described in paragraph 10.1, the tank is to be subjected to the Leakage Test, Section 8.

11. Water-Load Test

11.1 A tank shall be (1) placed in a sand bed so that approximately one-eighth of the tank diameter is buried, and (2) filled to capacity with water for 1 hour. The tank shall not be damaged.

12. External Pressure Test

General

12.1 A tank shall be tested either as described in paragraph 12.2 or, at the manufacturer's option, as described in paragraphs 12.3 and 12.4. The tank shall not implode or otherwise be damaged.

Method I

12.2 The empty tank is to be installed in a test pit using the recommended anchoring system and the specified backfill procedure. The pit is then to be filled with water to such a level that the tank is submerged to its maximum recommended burial depth. The tank is to remain submerged for 24 hours. While the tank is still submerged, it is to be subjected for 1 minute to a partial internal vacuum so that the internal pressure on the tank is 5.3 inches of mercury (17.9 kPa) less than the external pressure imposed by the hydrostatic head.

Method II

12.3 The tank is to be placed, at points simulating the use of hold-down straps, on saddles padded with 1/2-inch (12.7-mm) thick expansion-joint material. The tank is to be filled to capacity with water for 24 hours, and then is to be drained.

12.4 After the procedure described in paragraph 12.3, the tank is to be subjected for 24 hours to a partial internal vacuum so that the difference between the internal and external pressures on the tank is equal to that which would exist if the empty tank were submerged in water to its maximum recommended burial depth. The vacuum is then to be increased, for 1 minute, so that the internal pressure on the tank is 5.3 inches of mercury (17.9 kPa) less than the previous value.

13. Internal Pressure Test

13.1 A tank shall withstand without rupture for 1 minute an internal pressure as specified in Table 13.1.

TABLE 13.1
INTERNAL PRESSURE TEST

Maximum Diameter of Tank, Feet (m)	Applied Pressure, Psig (kPa)
10 (3.0) or less	25 (172)
More than 10	15 (103)

14. Physical Properties of Materials Tests

General

14.1 Samples cut directly from a tank are to be used for the tests described in paragraphs 14.2–14.12. At least 84 samples are to be used. The samples are to measure approximately 5 by 9 inches (127 by 229 mm) and are to be cut to minimize the amount of curvature, that is, so that the 5-inch dimension is parallel to the cylinder circumference.

Air-Oven Aging

14.2 Four as-received samples and 12 samples conditioned as described in paragraph 14.3 are to be subjected to the strength tests specified in paragraphs 14.4 and 14.5. The strength of the conditioned samples shall be at least 80 percent of the strength of the unconditioned samples.

14.3 Three groups of four samples are to be conditioned for 30, 90, and 180 days, respectively, in an air-circulating oven at a temperature of 70°C (158°F). Two of the samples from each group are then to be tested as specified in paragraph 14.4 and the remaining two are to be tested as specified in paragraph 14.5.

14.4 Samples are to be subjected to the flexural strength test described in Test Methods for Flexural Properties of Unreinforced and Reinforced Plastics and Electrical Insulating Materials, ANSI/ASTM D790–81, using a cross-head speed of 0.1 inch per minute (2.5 mm/min) and with the inside surface facing down. Five specimens are to be cut from each sample, parallel to the longest dimension of the sample, and as described in ASTM D790–81.

14.5 Samples are to be subjected to the Izod impact-strength test described in Test Methods for Impact Resistance of Plastics and Electrical Insulating Materials, ASTM D256–81. Five specimens are to be cut from each sample, parallel to the longest dimension of the sample, and as described in ASTM D256–81.

Immersion

14.6 Four as-received samples and 56 samples conditioned as described in paragraphs 14.8–14.10 are to be subjected to the tests specified in paragraphs 14.4 and 14.5. The strength of each sample that has been immersed in a Type A liquid shall be at least 50 percent of the strength of an unconditioned sample. The strength of each sample that has been immersed for 180 days in a Type B liquid shall be at least 30 percent of the strength of an unconditioned sample.

14.7 An immersion test liquid is classed as either Type A or Type B according to the following:

A. Type A liquids represent either an actual product to be stored or an outside soil condition.

B. Type B liquids are more severe than expected conditions and are intended to indicate whether additional testing is required to determine the acceptability of the material.

14.8 Samples are to be immersed in each of the liquids specified in Table 14.1 for 30, 90, and 180 days. A separate group of 14 samples (total of 42 samples) is to be used for each immersion period for each of the test liquids.

14.9 The liquids are to be maintained at 38°C (100°F) during the tests. The edges of all samples for immersion are to be coated with the same resin the tank is made from to minimize edge effects during the immersion. For the tests specified in paragraphs 14.4 and 14.5, specimens are to be cut from the centers of the samples that have been subjected to the immersion conditioning.

TABLE 14.1
IMMERSION-TEST LIQUIDS[a]

Type A	Type B
Premium leaded gasoline	Toluene
Regular unleaded gasoline	Distilled water[b] or deionized water[c]
No. 2 fuel oil	Hydrochloric acid (5 percent)[d]
ASTM Reference Fuel C[e]	Nitric Acid (5 percent)[d]
Sulfuric acid (pH=3)	Sodium carbonate-sodium bicarbonate solution (pH=10)[f]
Saturated sodium chloride	Sodium hydroxide (pH=12)
No. 6 fuel oil[g]	Sodium hydroxide (5 percent)[d]

a Test parameters, such as temperature and concentrations of media, are increased in severity over those of normal operating conditions to obtain observable deterioration in a reasonable period of time. This accelerated test may not give any direct correlation with service performance. However, the method yields comparative data on which to base judgment as to expected service.

b Distilled water having a maximum total matter of 2.0 ppm and a maximum electrical conductivity of 5.0 micromhos/cm at 25°C (77°F), as described for Type IV grade reagent water in the Standard Specification for Reagent Water, ASTM D1193—77.

c Deionized water having a maximum electrical conductivity of 5.0 micromhos/cm at 25°C (77°F), as described for Type IV grade reagent water in ASTM D1193—77.

d Percentage by weight.

e As described in the Test Method for Rubber Property — Effect of Liquids, ASTM D471—79.

f A pH of 10 can be obtained by mixing 10.6 g/L of sodium carbonate and 8.4 g/L of sodium bicarbonate. A pH meter is to be used and the ratio of sodium carbonate to sodium bicarbonate adjusted as needed. The pH is to be checked several times during the test.

g Optional, to be used only at the request of and at the temperature specified by manufacturer.

14.10 After immersion, specimens cut from each of the samples from each immersion group are to be tested separately as specified in paragraphs 14.4 and 14.5. The results of the tests are to be evaluated according to paragraph 14.6 and, in addition, the results from immersion in each of the Type A liquids are to be extrapolated to obtain 270-day retention values. The extrapolated strength shall be not less than 50 percent of the strength of unconditioned samples. If the extrapolated value is less than 50 percent for a particular liquid, an additional group of 14 samples is to be immersed in that liquid for a total of 270 days as described in paragraph 14.9, and then tested as described in paragraphs 14.4 and 14.5. The strength of the samples shall be not less than 50 percent of that of an unconditioned sample.

Impact

14.11 A sample shall be tested as described in paragraph 14.12 and shall not crack or show rupture of the laminate. Crazing is acceptable.

14.12 Four samples are to be conditioned for 16 hours in a cold box maintained at minus 29°C (minus 20°F). These samples and four additional unconditioned samples are then to be clamped, one at a time, between two steel rings having an inside diameter of 4-1/4 inches (108 mm). A 1.18-pound (0.536-kg) steel ball is to be dropped once from a height of 6 feet (1.8 m) to strike the outside surface of each sample.

15. Earth-Load Test

15.1 A tank shall be subjected to the test specified in paragraphs 15.2 and 15.3 and shall not implode, leak, or otherwise be damaged.

15.2 An empty tank of each diameter is to be installed in a test pit or an apron is to be constructed around the four sides of the tank. Backfilling is to be done according to the manufacturer's installation instructions. The tank is to be covered so that it is 3 feet (0.9 m) below the surface of the fill. The tank is to remain buried for at least 1 hour.

15.3 The tank is then to be subjected to the Leakage Test, Section 8.

MANUFACTURING AND PRODUCTION TESTS

16. Leakage Test

16.1 Each tank shall be tested, as a routine production-line test, for leakage as described in paragraph 8.2. If leakage is noted, the tank shall be repaired and retested.

17. Internal Vacuum Test

17.1 Each tank shall withstand, without rupture, an internal partial vacuum according to the equation:

$$V = (1/2\ D + h) \times 0.88 \text{ inches Hg/ft}$$

in which:

V is the vacuum in inches Hg,
D is the tank diameter in feet, and
h is the maximum recommended burial depth in feet, but not less than 3 feet.

Exception: A lower internal vacuum may be used if it can be shown that the lower value, applied to the tank above ground, is representative of the specified value applied to the buried tank.

MARKING

18. General

18.1 All required markings shall be permanent, such as paint or paper labels imbedded in clear resin on the outside surface of the tank.

18.2 Each tank shall be legibly marked with the name of the manufacturer or a distinctive marking by which it may be identified as the product of a particular manufacturer.

18.3 If a manufacturer produces tanks at more than one factory, each tank shall have a distinctive marking to identify it as the product of a particular factory.

18.4 Each tank shall be marked with information that is deemed necessary by the manufacturer. This marking shall include at least the following:

A. "Maximum test pressure X psig" or the equivalent, in which X is 5 for tanks 10 feet (3 m) in diameter or less and 3 for tanks larger than 10 feet in diameter.

B. "Keep tank vented," or the equivalent.

C. "Follow installation instructions," or the equivalent.

D. The word "CAUTION" and the following or the equivalent: "To reduce the risk of damage to the tank, do not fill tank prior to backfilling."

E. "Do not roll or drop tank," or the equivalent.

18.5 If a tank has a steel deflection plate under only one opening as covered in item (2) of paragraph 6.1, the opening shall be marked to indicate that dipstick measurements shall be made only at that location.

Paragraph 18.5 effective October 19, 1983

19. Installation Instructions

19.1 Two copies of the manufacturer's installation instructions shall be provided with each tank, one of which shall be embedded in clear resin on the outside surface of the tank.

Paragraph 19.1 effective October 19, 1983

19.2 The installation instructions shall include (1) the method of intended lifting, including the intended distribution of the load between the fittings if more than one fitting is provided, and (2) indication that the backfill to be used shall be either pea gravel or compacted, clean dry sand, as specified by the manufacturer.

UL Standards for Safety are developed under a procedure which provides for participation and comment from the affected public as well as industry. The procedure takes into consideration a survey of known existing standards, and the needs and opinions of a wide variety of interests concerned with the subject matter of the Standard. Thus manufacturers, consumers, individuals associated with consumer-oriented organizations, academicians, government officials, industrial and commercial users, inspection authorities, insurance interests and others provide input to UL in the formulating of UL Standards for Safety, and keeping them consonant with social and technological advances.

AN INDEPENDENT LABORATORY · UL · TESTING FOR PUBLIC SAFETY

UNDERWRITERS LABORATORIES INC.

333 Pfingsten Rd. Northbrook, IL 60062 | 1285 Walt Whitman Rd. Melville, L.I., N.Y. 11747 | 1655 Scott Blvd. Santa Clara, CA 95050 | 2602 Tampa East Blvd. Tampa, FL 33619

Steel Tank Institute 666 Dundee Road
Suite 705
Northbrook, Illinois 60062
312/498-1980

March 26, 1982

TO: STI Members

FROM: STI Staff

RE: Recommended Practice for Optional Interior Corrosion Control System for Steel Tanks

Gentlemen:

Enclosed is a recommended practice approved by the sti-P_3© Executive Committee for Optional Internal Corrosion Control System for Steel Tanks.

This system contains three components to protect against internal corrosion. One area where internal corrosion can occur is under the fill opening in the tank. This area is susceptible because of the wear caused by both filling the tank and taking dip stick readings. The other area susceptible to internal corrosion is the unwelded plate overlaps.

Both of these areas are protected in the attached recommended practice. Please note that this protection relates to the storage of products which are considered non-corrosive to steel. A list of such products is contained in the specification.

STEEL TANK INSTITUTE RECOMMENDED PRACTICE

OPTIONAL INTERIOR CORROSION CONTROL SYSTEM FOR STEEL TANKS

PURPOSE: Corrosion Protection of Potential Interior Corrosion Hot Spots

When storing a liquid that is considered non-corrosive to steel in a steel tank, significant interior corrosion will occur only in the presence of a water bottom and then only at localized sites. These "hot spots" can result in tank damage if corrosive conditions are left unmitigated. Those sites are on the tank bottom under the fill/gauge stick opening and at unwelded plate overlaps. This specification eliminates corrosion at the overlaps and provides a corrosion allowance under the openings. This results in excellent interior leak protection and inhibits leaks due to interior corrosic

The interior corrosion protection is specifically limited to the following list of commor hydrocarbons which are considered non-corrosive to steel: gasoline; gasohol of any ethanol to gasoline ratio; fuel oil; kerosene; jet fuel; ethanol; propylnol; butanol; benzene; phenol; toluene; xylene.

PROCEDURE:

1. Wear Plates - Install 8" wide by minimum 8" long by 1/4" minimum steel wear plate under each opening. Weld in place with 1" weld at each corner per Figure 1. Sandblast wear plates to SSPC-SP-5 white metal finish prior to installation.

2. Interior Seal Welding - The bottom 60° of all lap or offset circumferential seams shall be seal welded 30° each way from the bottom centerline.

3. In the event that it is impractical to seal weld the interior seal of the last head fit in place in tanks where an access manhole is not required; and where it is impractical to interior weld the last head seam, that seam shall be cathodically protected.

   This protection shall be provided by two (2) strips of regular size diamond line anodes of either Hi-Amp Zinc or Hi-Pure Alloy Zinc.

   Process: 1. Cut 16" long section of the anode material.

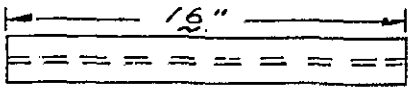

   2. Melt 1 1/2" to 2" of zinc off each end exposing steel core wire.

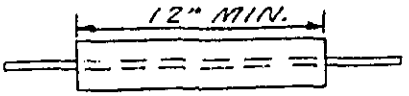

   3. Form strip to fit tank bottom curvature and core wire to fit shell or head plate.

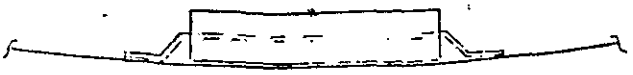

   4. Position the two anodes according to Figure 2.

   5. Weld anode core wire to shell or head at both ends of anode.

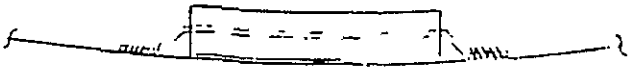

FIGURE 1

WEAR PLATE DETAILS

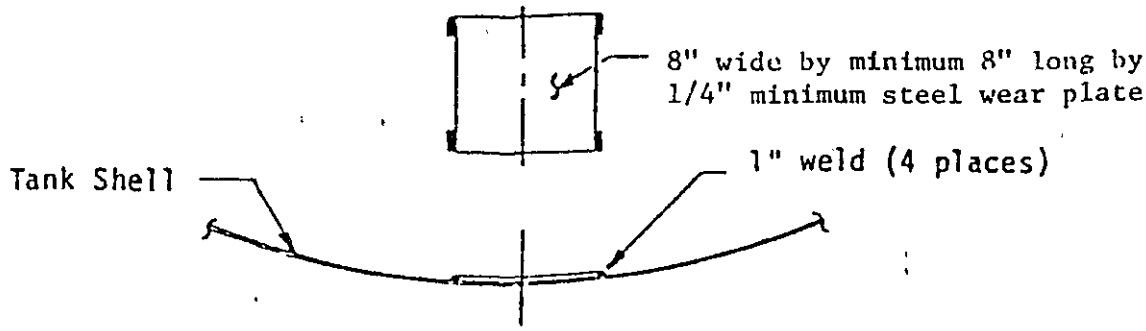

FIGURE 2

INTERIOR ANODE LOCATION DETAIL

(Placement on unwelded head joint only)

(Drawn from U.L. 58, Figure 6.1)

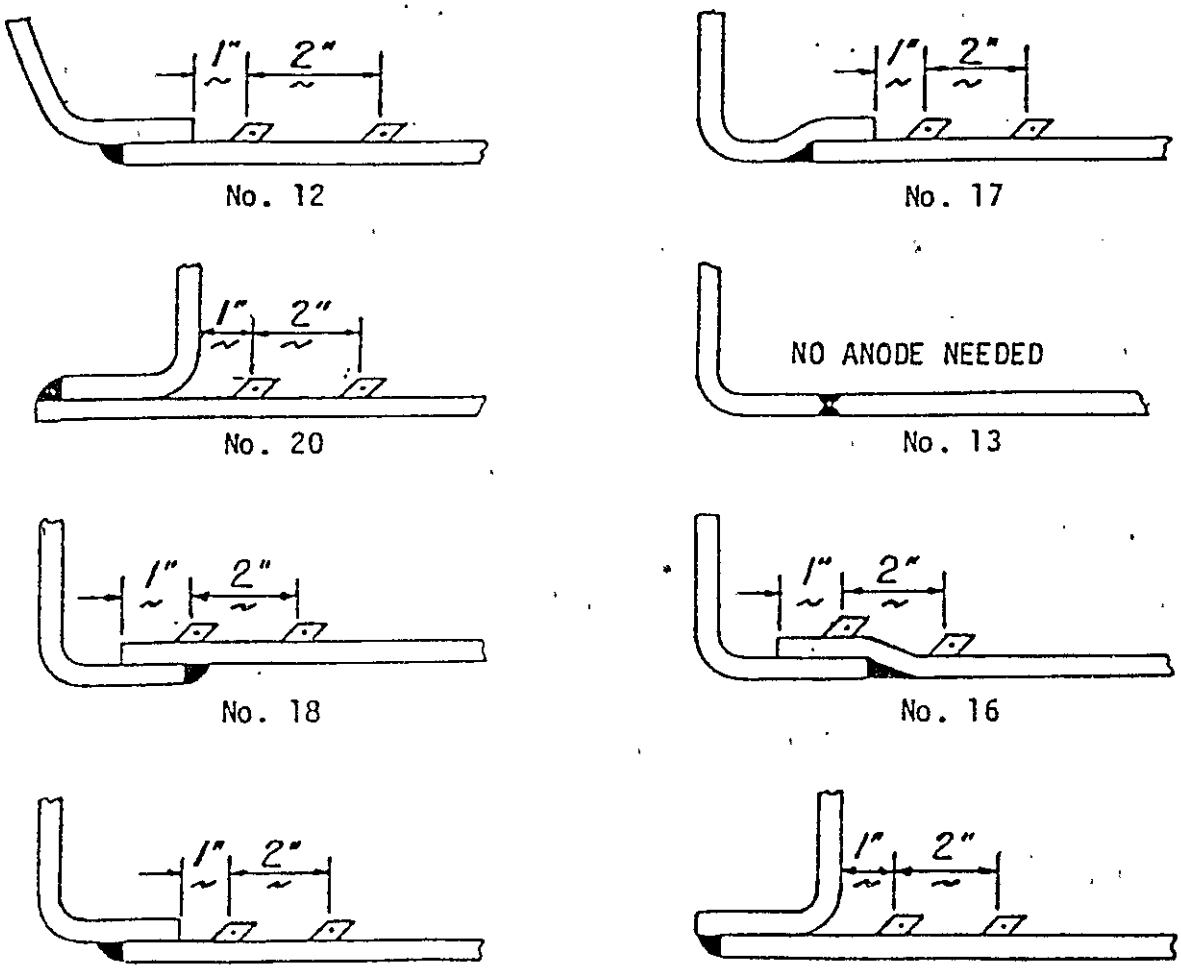

Warranty

Standard Tank for Petroleum Products

We warrant that our underground tanks, if installed underground with proper backfill and otherwise installed in accordance with our instructions:

1. Will meet our published specifications and will be free from material defects in materials and workmanship for a period of one (1) year following date of original delivery by us;
2. Will not fail for a period of thirty (30) years from date of original purchase due to external corrosion; and
3. Will not fail for a period of thirty (30) years from date of original purchase due to internal corrosion, provided the tank is used solely for gasoline, gasohol (90% gasoline and 10% ethanol mixture), 90.5% gasoline and 9.5% Oxinol-50* (4.75% methanol and 4.75% GTBA mixture), jet fuel, kerosene, diesel fuel or potable water at ambient underground temperatures; or used for fuel oil at temperatures not to exceed 150°F.

Our liability under this warranty shall be limited to, at our option, (i) repair of the defective tank, (ii) delivery of a replacement tank to the point of original delivery, or (iii) refund of the original purchase price, and we shall not be liable for any labor, other installation costs, indirect or consequential damages or other damages in connection with such tanks. THE FOREGOING CONSTITUTES OUR EXCLUSIVE OBLIGATION AND WE MAKE NO EXPRESS OR IMPLIED WARRANTIES, OR ANY WARRANTY OF MERCHANTABILITY OR FITNESS FOR ANY PARTICULAR PURPOSE WHATSOEVER, EXCEPT AS STATED ABOVE.

OWENS/CORNING FIBERGLAS TRADEMARK

OWENS-CORNING FIBERGLAS CORPORATION
Non-Corrosive Products Division
Fiberglas Tower, Toledo, Ohio 43659

*TM Arco Chemical Co.

Pub. No. 15-PE-9387-B
Copyright © 1984 Owens-Corning Fiberglas Corp.
Litho in U.S.A., July, 1984

FIBERGLASS COUPONS

3 Months (90 days) Coupons

Fuel	1	2	3	4	5	6
Weights (grams):						
Final Weight	136.44	137.65	143.94	130.68	136.92	134.22
Initial Weight	136.44	131.90	142.43	130.66	134.12	133.73
Net Change	0.00	+5.75	+1.51	+0.02	+2.80	+0.49
Dimensions (inches):						
Final Length	4.96	5.04	5.06	4.97	5.04	4.96
Initial Length	4.96	4.96	5.06	4.96	5.10	4.98
Net Change	0.00	+0.08	0.00	+0.01	-0.06	+0.02
Final Width	4.01	4.04	4.05	4.01	3.92	3.97
Initial Width	4.01	4.00	4.04	4.01	3.90	4.00
Net Change	0.00	+0.04	+0.01	0.00	+0.02	-0.03
Final Thicknesses						
	.310	.297	.286	.280	.286	.292
	.314	.304	.296	.285	.293	.295
	.293	.287	.311	.294	.298	.288
	.302	.287	.307	.298	.283	.303
Initial Thicknesses						
	.311	.297	.286	.275	.280	.286
	.317	.308	.295	.282	.290	.295
	.294	.276	.308	.288	.294	.280
	.302	.286	.302	.287	.279	.297
Avg. Final Thickness	.305	.294	.300	.289	.290	.294
Avg. Initial Thickness	.306	.292	.298	.283	.286	.290
Avg. Net Change	-.001	+.002	+.002	+.006	+.004	+.004

FIBERGLASS COUPONS

6 Months (180 days) Coupons

Fuel	1	2	3	4	5	6
Weights (grams):						
Final Weight	132.89	134.50	141.00	121.12	135.70	132.31
Initial Weight	132.81	134.58	139.63	120.88	135.26	131.65
Net Change	+0.08	-0.08	+0.37	+0.24	+0.44	+0.66
Dimensions (inches):						
Final Length	4.96	5.07	5.06	5.04	4.98	5.04
Initial Length	4.96	5.04	5.05	5.05	4.96	5.01
Net Change	0.00	+0.03	+0.01	-0.01	+0.02	+0.03
Final Width	4.00	4.07	4.03	4.05	4.01	3.97
Initial Width	4.00	4.03	4.02	4.04	4.00	3.96
Net Change	0.00	+0.04	+0.01	+0.01	+0.01	+0.01
Final Thicknesses						
	.292	.282	.286	.272	.291	.292
	.293	.287	.304	.264	.294	.284
	.282	.294	.310	.280	.299	.286
	.284	.310	.303	.286	.284	.291
Initial Thicknesses						
	.293	.284	.284	.269	.289	.289
	.294	.289	.307	.263	.296	.285
	.284	.290	.309	.280	.299	.284
	.285	.307	.303	.281	.284	.288
Avg. Final Thickness	.288	.293	.301	.276	.292	.288
Avg. Initial Thickness	.289	.293	.301	.273	.292	.287
Avg. Net Change	-.001	.000	.000	+.003	.000	+.001

Flexural Strength* Results

Figure 5

One Month Results

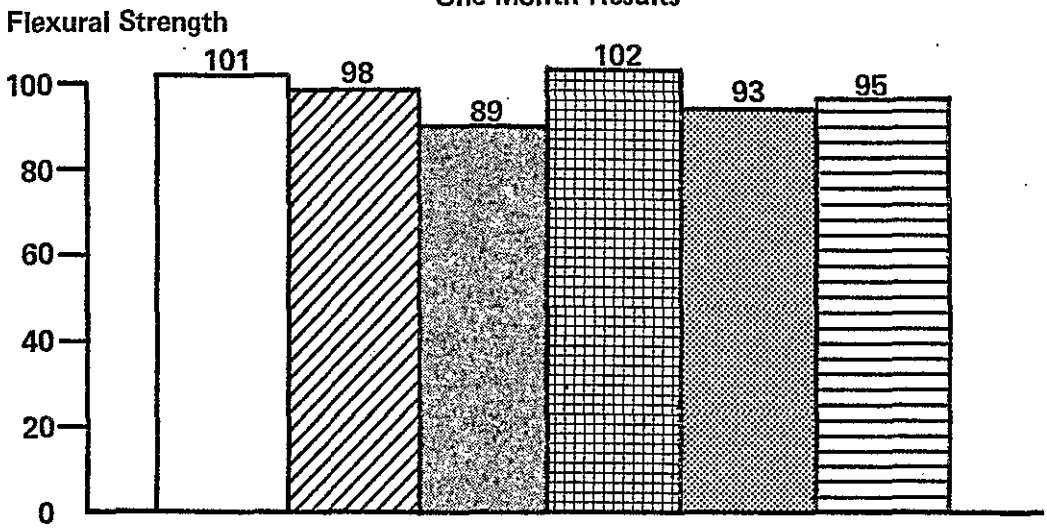

Three Month Results

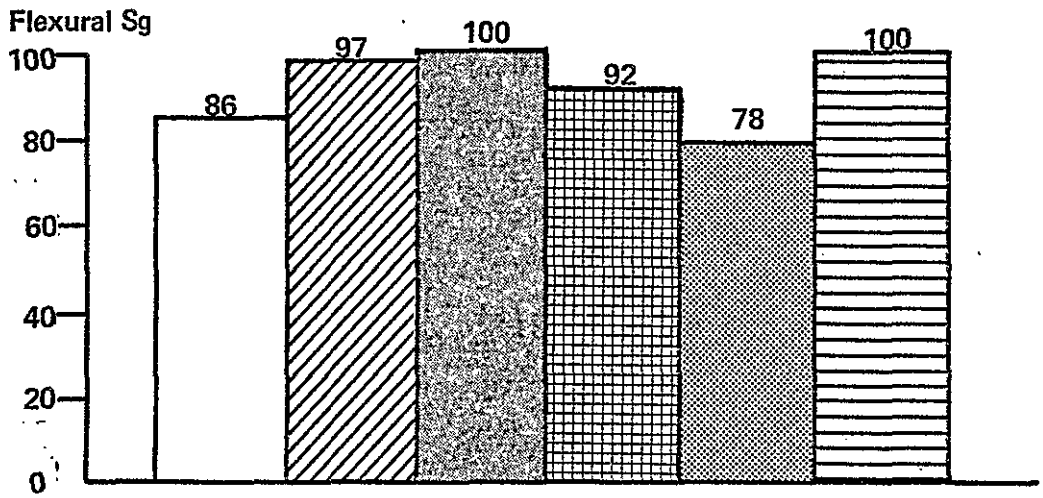

Six Month Results

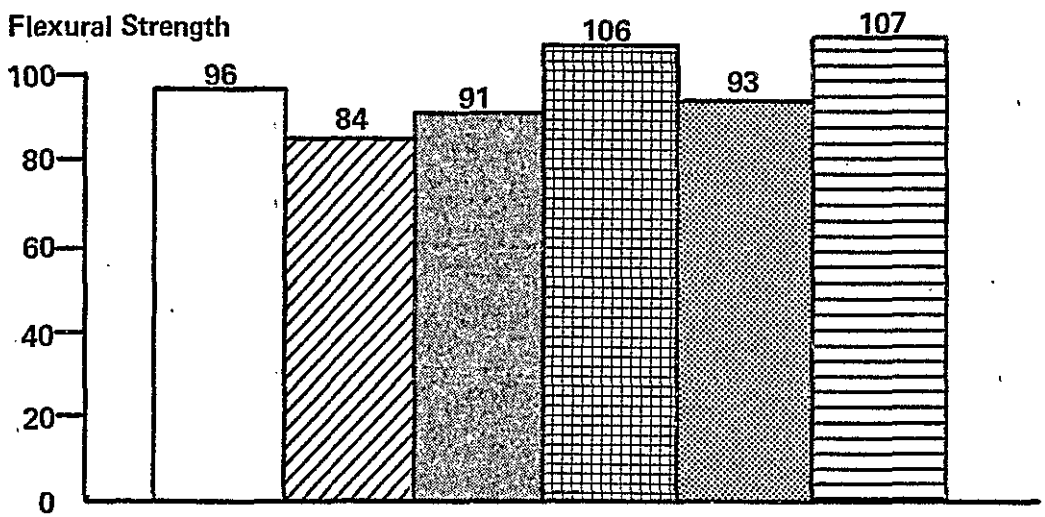

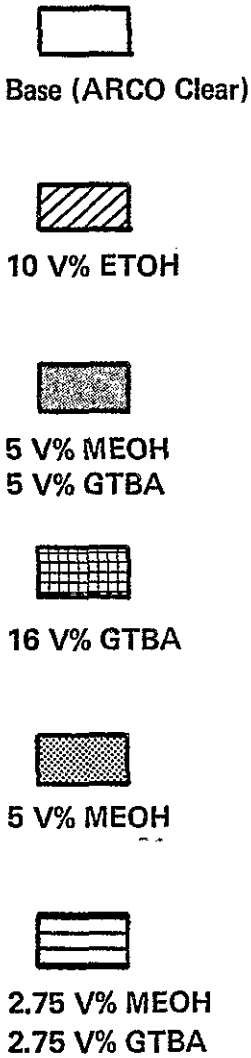

*% Retention from Original Value

Flexural Modulus* Results

Figure 6

One Month Results

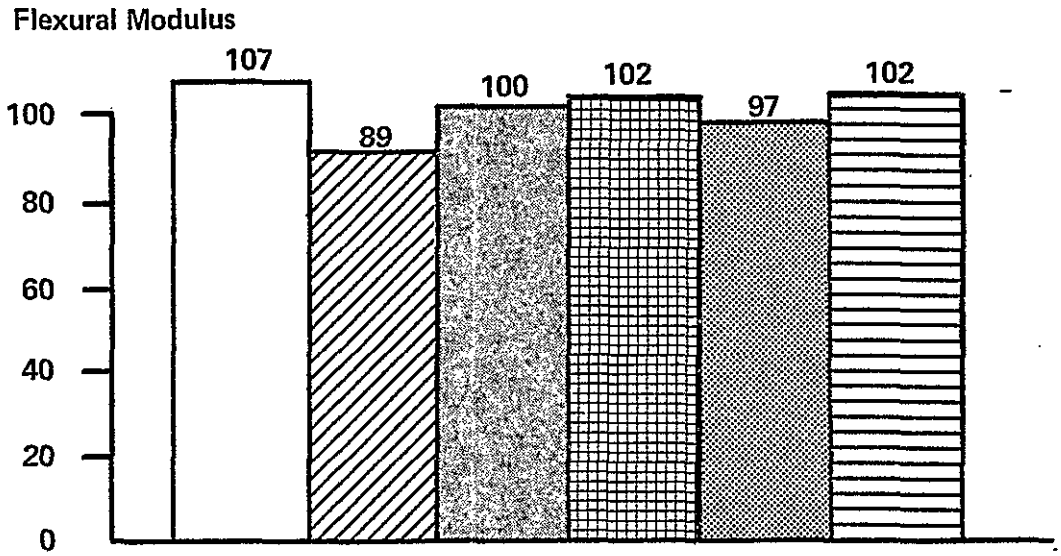

Three Month Results

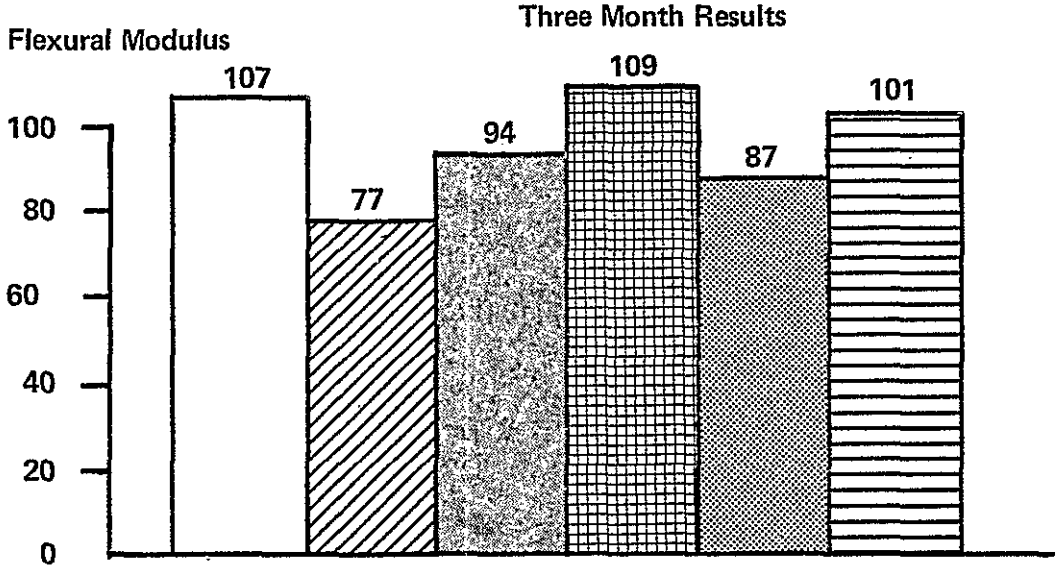

Six Month Results

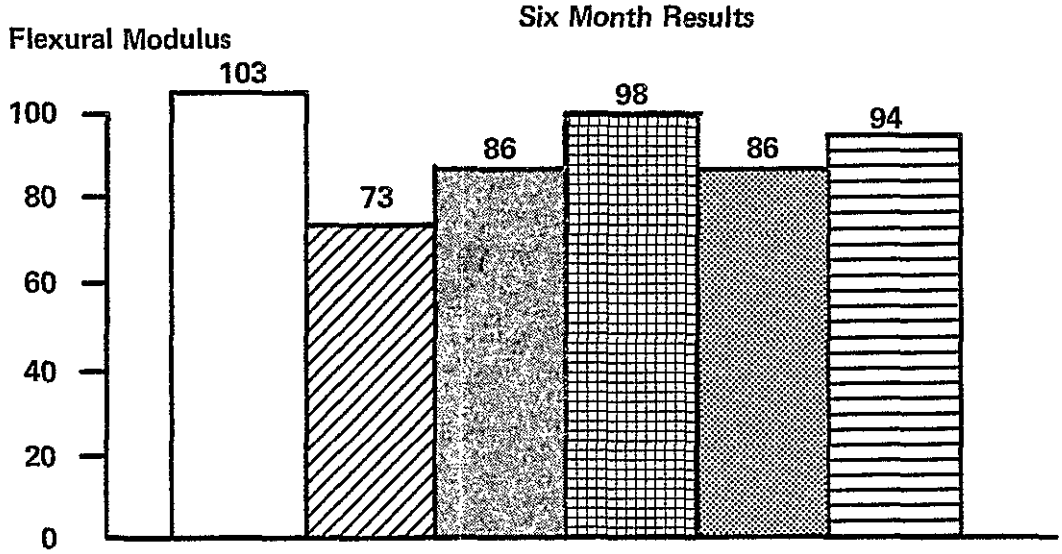

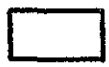
Base (ARCO Clear)

10 V% ETOH

5 V% MEOH
5 V% GTBA

16 V% GTBA

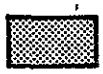
5 V% MEOH

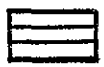
2.75 V% MEOH
2.75 V% GTBA

*% Retention from Original Value

INDEX TO APPENDIX

PAGE	
1A	ONE MONTH - WEIGHTS AND THICKNESS
2A	THREE MONTHS - WEIGHTS AND THICKNESS
3A	SIX MONTHS - WEIGHTS AND THICKNESS
4A	FLEXURAL STRENGTH RESULTS AT ONE, THREE, AND SIX MONTHS
5A	FLEXURAL MODULUS RESULTS AT ONE, THREE, AND SIX MONTHS
6A	BARCOL HARDNESS RESULTS AT ONE, THREE, AND SIX MONTHS

FIBERGLASS COUPONS

1 Month (30 days) Coupons

Fuel	1	2	3	4	5	6
Weights (grams):						
Final Weight	137.10	136.83	152.86	133.31	142.55	138.13
Initial Weight	137.15	135.56	151.66	133.19	140.87	137.56
Net Change	-0.05	+1.27	+1.20	+0.12	+1.68	+0.57
Dimensions (inches):						
Final Length	5.04	5.03	5.03	5.04	5.04	5.04
Initial Length	5.03	5.02	5.02	5.03	5.10	5.02
Net Change	+0.01	+0.01	+0.01	+0.01	-0.06	+0.02
Final Width	4.00	3.99	4.02	4.05	3.99	4.00
Initial Width	3.99	3.97	4.02	4.03	3.99	3.99
Net Change	+0.01	+0.02	0.00	+0.02	0.00	+0.01
Final Thicknesses						
	.284	.279	.348	.311	.291	.307
	.277	.284	.322	.300	.304	.304
	.275	.283	.311	.309	.297	.297
	.281	.276	.344	.294	.278	.278
Initial Thicknesses						
	.302	.277	.315	.296	.294	.274
	.291	.304	.298	.288	.303	.297
	.287	.288	.322	.291	.281	.310
	.285	.274	.332	.297	.290	.292
Avg. Final Thickness	.279	.281	.331	.304	.292	.297
Avg. Initial Thickness	.291	.286	.317	.293	.292	.293
Avg. Net Change	-.012	-.005	+0.14	+0.11	0.00	+0.04

100 Year Results*

Figure 4

Flexural Strength

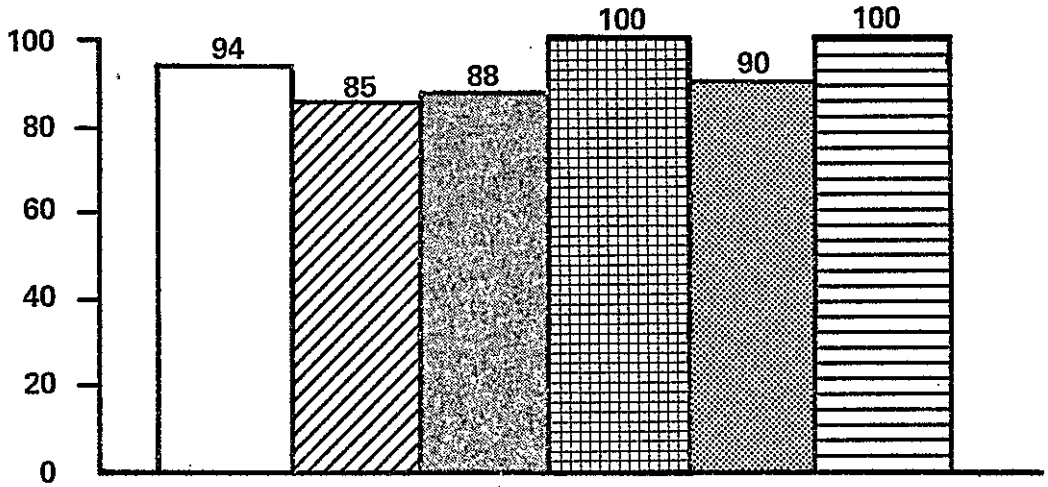

Flexural Modulus

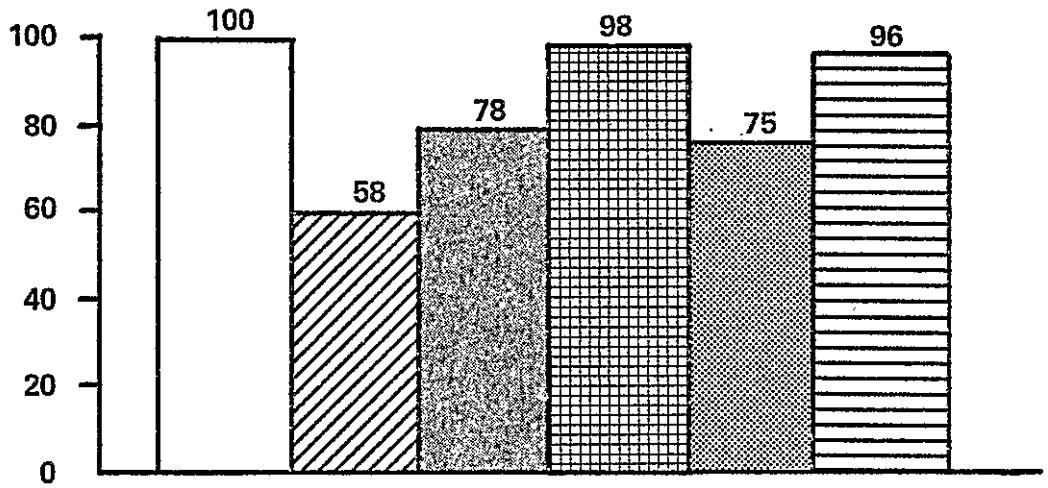

Barcol Hardness

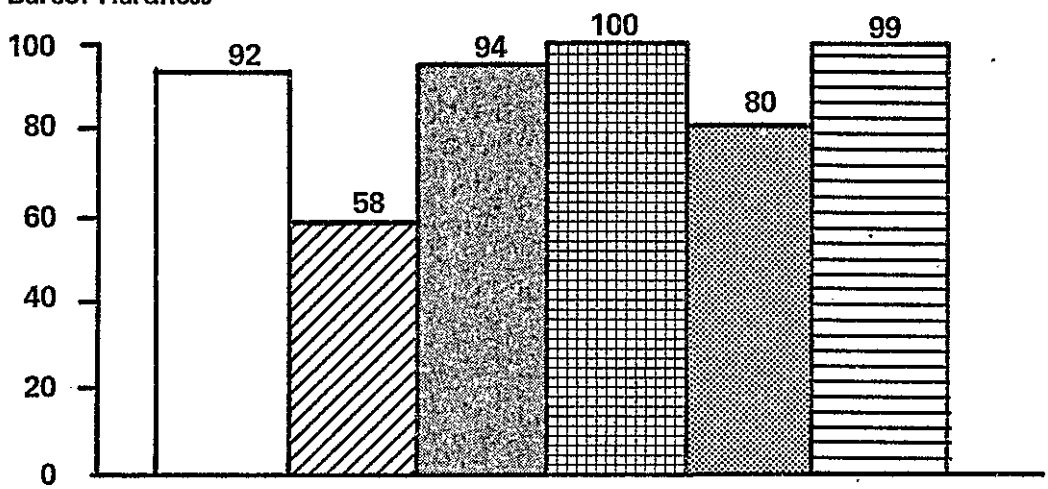

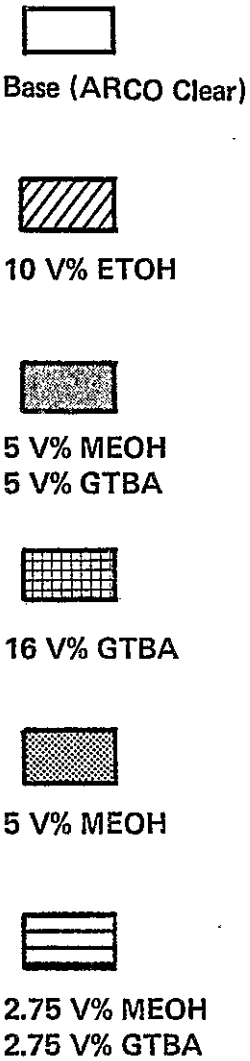

*Results Obtained by Extrapolating One, Three, & Six Month Data

Six Month Results
Fiberglass Coupon Thickness & Weight Changes*

Figure 2

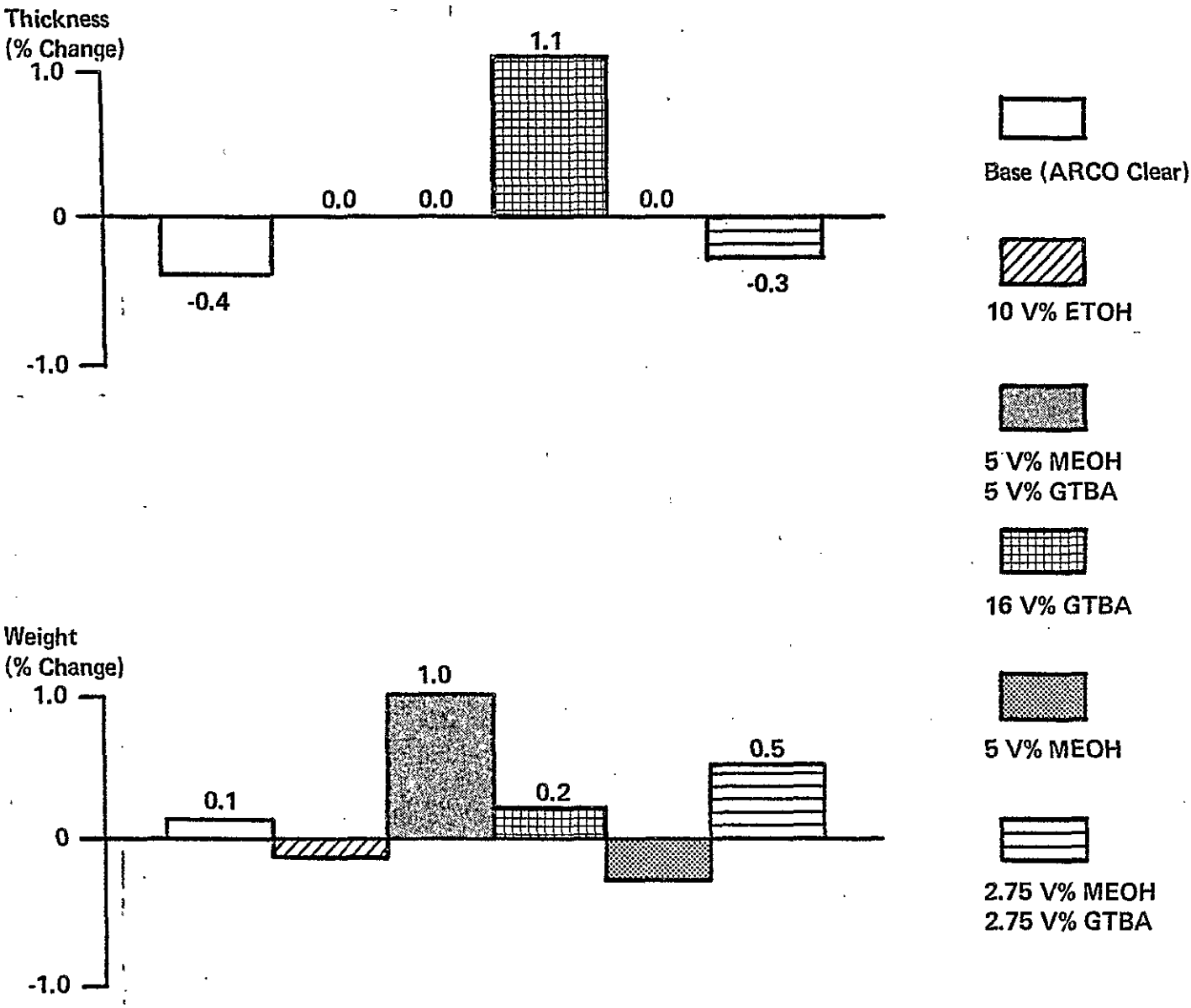

*% Change from Original Value

10 Year Results*
Flexural Strength, Flexural Modulus, Barcol Hardness

Figure 3

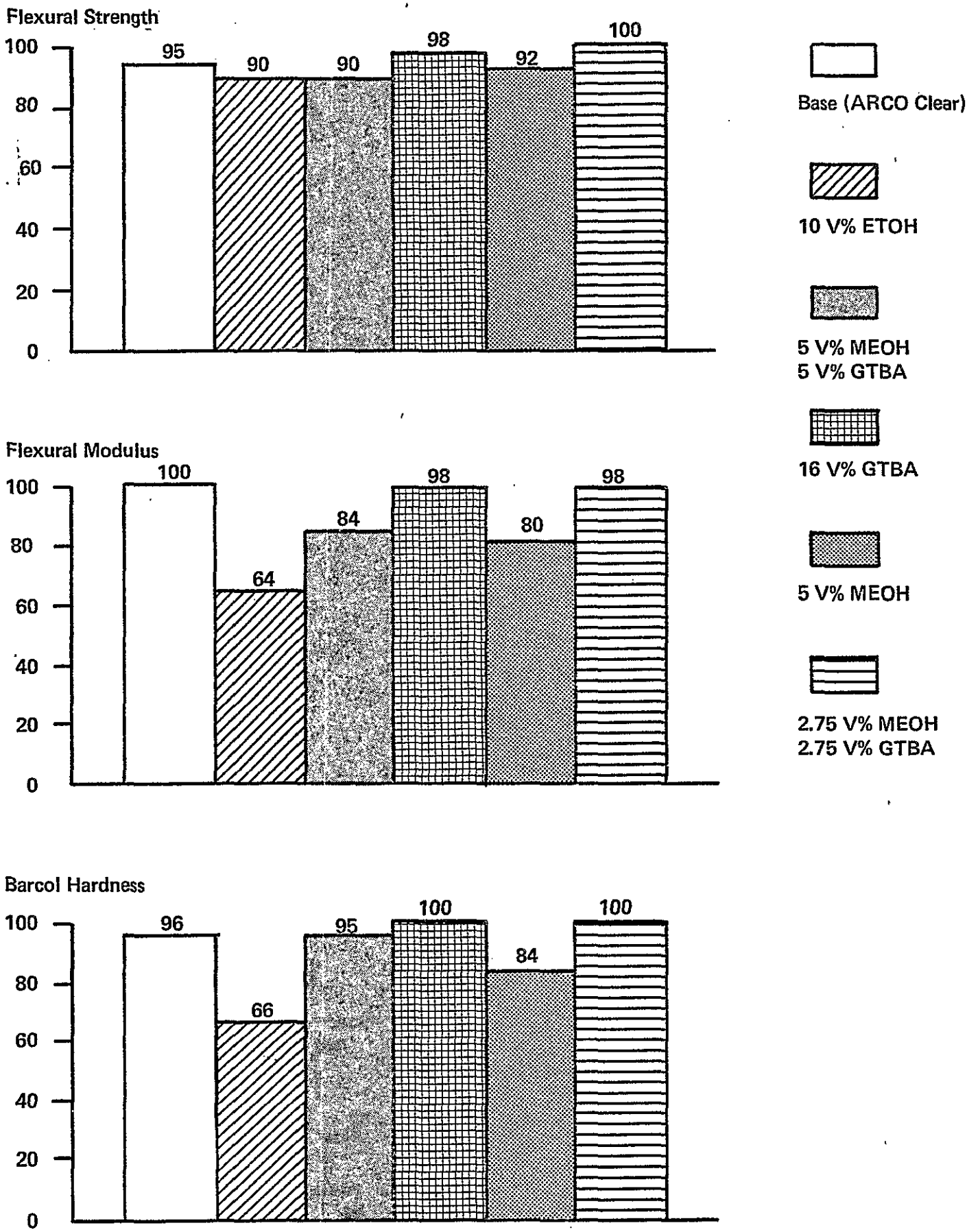

*Results Obtained by Extrapolating One, Three, and Six Month Data

Table 1

TESTS AND PROPERTIES OF TEST FUELS

Fuel	1	2	3	4	5	6
	Unleaded Gasoline	Gasohol	5V% MeOH 5V% GTBA	16V% GTBA	5V% MeOH	2.75V% MeOH 2.75V% GTBA
Specific Gravity 60/60	.7322	.7401	.7377	.7399	.7355	.7347
RVP, lb Dry*	11.40	12.40	13.80	11.35		
Auto**					14.23	13.50
Oxygen, W% (Calculated)		3.5	3.7	3.5	2.5	2.0
Sulfur, W%		0.10	0.10	0.09	0.11	0.11
Fischer H_2O, W%	0.01	0.04	0.04	0.07	0.012	0.04
GC V% Methanol	-	-	4.7	0.4	5.0	2.9
V% Ethanol	-	9.4	-	-	-	-
V% TBA	-	-	4.7	15.6	-	2.9
Gum, mg/100 ml						
Unwashed	13.6	10.8	11.4	9.8	14.2	14.6
Washed	0.06	< 0.2	< 0.2	< 0.2	0.6	0.8
Fuels Rust	D	B++	A	A	B++	B++
Fuels Rust + 6 PTB ARCO 4410	A	A	A	A	A	A
D-86 Distillation, °F						
% Evaporated						
IBP	90	82	84	88	86	79
10	112	111	105	118	102	95
20	137	126	118	136	112	107
30	163	139	134	154	136	132
40	189	149	160	164	177	160
50	213	173	191	178	206	188
60	240	221	225	201	233	216
70	271	252	259	248	265	246
80	311	294	304	292	307	290
90	358	342	353	346	357	345
EP	424	405	438	418	421	426
ES Metals, ppm						
Fe	0.4	0.8	1.1	0.96	0.04	0.5
Mg	0.04	0.4	0.04	0.03	0.008	0.03
Pb	< 0.3	< 0.3	< 0.2	< 0.3	< 0.3	< 0.2
Al	<0.003	0.12	0.03	<0.003	< 0.03	<0.002
Cu	0.1	0.03	0.06	0.05	0.02	0.03
Zn	< 0.3	< 0.5	< 0.5	< 0.5	< 0.5	< 0.4
Sn	< 0.05	< 0.05	0.1	0.04	0.05	0.06
% Paraffins	59.2					
% Olefins	12.4					
% Naphthenes	4.0					
% Aromatics	24.4					

* ASTM method modified to use no water.
** Automated method that uses no water.

Six Month Results*
Flexural Strength, Flexural Modulus, Barcol Hardness

Figure 1

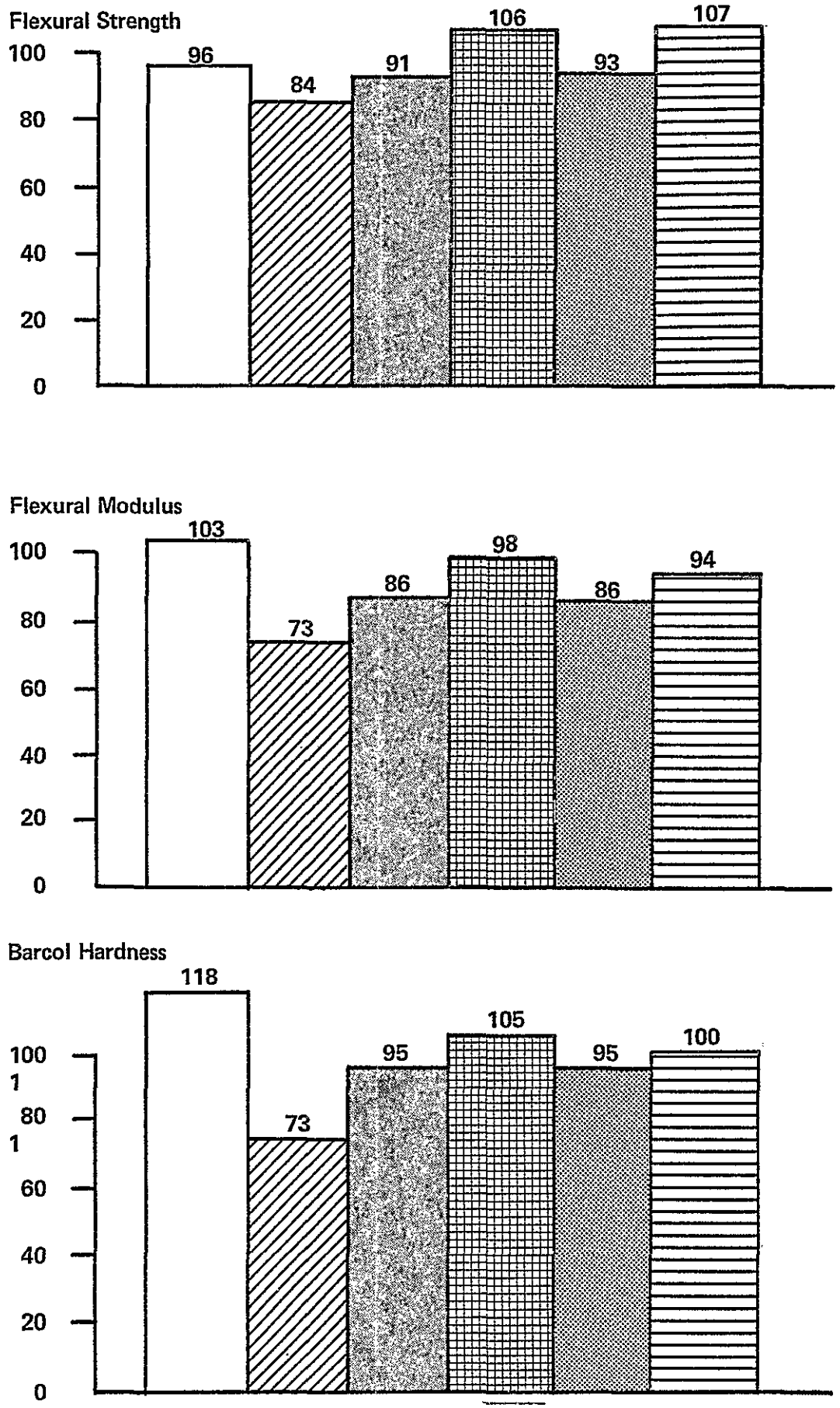

Base (ARCO Clear)

10 V% ETOH

5 V% MEOH
5 V% GTBA

16 V% GTBA

5 V% MEOH

2.75 V% MEOH
2.75 V% GTBA

*% Retention, from Original Value

OXYGENATED FUELS TECHNICAL BULLETIN

ARCONOL® MTBE OXINOL®

Octane Enhancers

No. 8208

August 1982

COMPATIBILITY OF FIBERGLASS WITH FUELS CONTAINING OXYGENATES

TEST METHOD AND CONCLUSION

Atlantic Richfield Company has completed a six-month program to determine the effect of fuels containing oxygenates on standard Owens-Corning Fiberglas (OCF) petroleum tank laminates. Six fuels were tested with coupons supplied by Owens-Corning Fiberglas Corporation. The fuels tested were a base fuel (ARCOclear unleaded gasoline), 10 volume percent ethanol, 10 volume percent OXINOL™50* blending component, 16 volume percent ARCONOL® GTBA, 5 volume percent methanol, and 5.5 volume percent OXINOL™50 blending component.

After being stored at 110°F, coupons were removed from the fuels after one, three, and six-month periods. Owens-Corning tested the coupons for Flexural Strength, Flexural Modulus, and Barcol Hardness. These tests showed excellent property retention in all six fuels over the six-month period. There was also no significant change in weight or thickness of the coupons over the six-month test.

Additional evaluation of the one, three, and six-month data provides an estimate of the fiberglass tank service life for the six fuels.

By extrapolating the data, there is a service life of no less than one-hundred years for all fuels tested. Owens-Corning typically uses this method to determine fiberglass tank life. The lowest property retentions were observed for the 10 volume percent ethanol

---

* OXINOL is a trademark of the Atlantic Richfield Company for oxygenated blending components containing methanol and ARCONOL® gasoline-grade tertiary-butyl alcohol. OXINOL™50 blending component is a blend of 50 volume percent methanol and 50 volume percent ARCONOL GTBA.

© 1982 by Atlantic Richfield Company

ARCO Chemical Company ARCO
Division of AtlanticRichfieldCompany
OCTANE COMPONENTS GROUP / 1500 Market Street, Philadelphia, PA 19101 (215) 557-2642
4550 Post Oak Place Drive, Houston, TX 77027 (713) 552-5061

fuels, which can still be safely stored in OCF tanks for up to one-hundred years.

There should be no problems with the storage of oxygenated fuels at the levels tested in OCF tanks. Data obtained in this test supports this conclusion.

DISCUSSION

Physical properties for the six fuels are given in Table 1.

Figure 1 shows the Flexural Strength, Flexural Modulus, and Barcol Hardness property retention values after six months. The 10 volume percent ethanol fuel has the lowest retention values, but all property retentions were excellent. Final evaluation made on the six-month coupons were most important to the program.

Figure 2 shows the thickness and weight changes after six months expressed as a percent change from the original value. All changes were minimal. The largest changes were a 1.1% increase in thickness in the 16 volume percent GTBA fuel and a 1.0% increase in weight in the 10 volume percent OXINOL™50 fuel.

Figure 3 shows ten-year results and Figure 4 shows one-hundred year results for Flexural Strength, Flexural modulus, and Barcol Hardness. These results were obtained by extrapolating the one, three, and six-month data. The 10 volume percent ethanol fuel shows a 58% retention from the original value for Flexural Modulus and Barcol Hardness at one-hundred years. Fifty percent would be about the minimum considered acceptable. The results show the other five fuels would have service life beyond the one-hundred years.

The Appendix gives the raw data for weight and thickness of the fiberglass coupons after one, three, and six months. Flexural Strength, Flexural Modulus, and Barcol Hardness results after one, three, and six months are also shown.

The information in this bulletin is believed to be accurate but all recommendations are made without warranty, since the conditions of use are beyond ARCO Chemical Company's control. The listed properties are illustrative only, and not product specifications. ARCO Chemical Company disclaims any liability in connection with the use of the information, and does not warrant against infringement by reason of the use of any of its products in combination with other material or in any process.

Barcol Hardness* Results

Figure 7

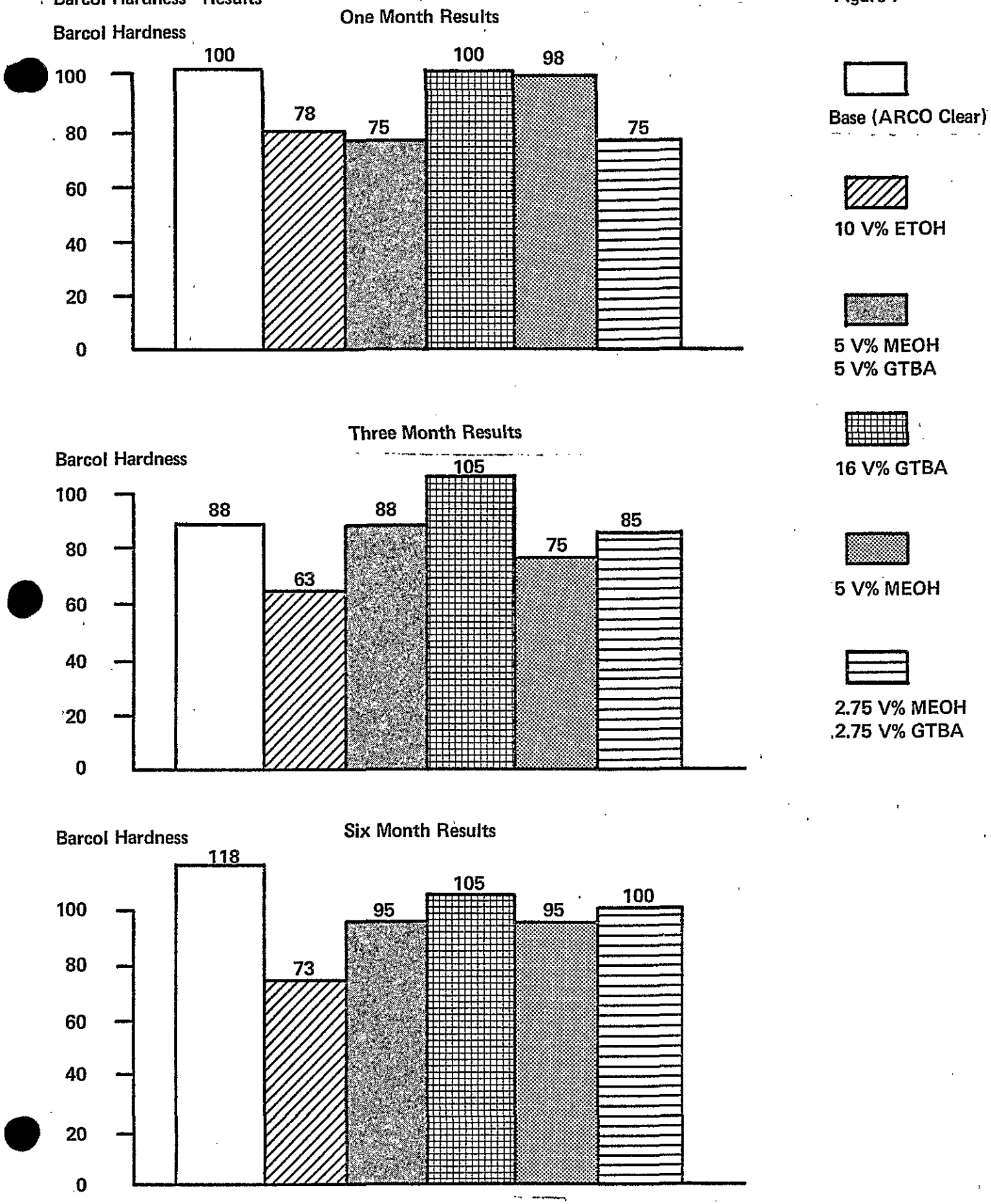

*% Retention from Original Value

UNDERWRITERS LABORATORIES INC.
333 PFINGSTEN ROAD · NORTHBROOK, ILLINOIS 60062
an independent, not-for-profit organization testing for public safety

July 2, 1984

Owens-Corning Fiberglas Corporation
Attn: Mr. Harland Fargo
P. O. Box 415
Granville, OH 43023

Our Reference: MH7991

Subject: Nonmetallic Underground Storage Tanks for Petroleum Products and Gasohol (Regular Unleaded Gasoline and 10% Maximum Ethyl Alcohol)

Gentlemen:

In accordance with your request, this is to confirm that we have established Listing and Follow-Up Service for your company under the subject category.

Those tanks which have been produced under our Listing and Follow-Up Service will bear the Listing Mark of Underwriters Laboratories Inc. for Nonmetallic Underground Storage Tanks for Petroleum Products and Gasohol (Regular Unleaded Gasoline and 10% Maximum Ethyl Alcohol). The Listing Mark on the product is the only method provided by UL to identify tanks which have been produced under its Listing and Follow-Up Service.

Very truly yours,

Steven C. Slowik

STEVEN C. SLOWIK
Project Engineer
Casualty and Chemical
Hazards Department

Reviewed by:

John J. Hawley

JOHN J. HAWLEY
Engineering Group Leader
Casualty and Chemical
Hazards Department

SCS/ss

National Fire Protection Association

NFPA 30 Flammable and Combustible Liquids Code 1984

2-3.3 Corrosion Protection. Tanks and their piping shall be protected by either

(a) a properly engineered, installed and maintained cathodic protection system in accordance with recognized standards of design, such as:

1) American Petroleum Institute Publication 1632—1983 "Cathodic Protection of Underground Petroleum Storage Tanks and Piping Systems"

2) Underwriters Laboratories of Canada ULC 603.1-M-1982 "Standard for Galvanic Corrosion Protection Systems for Steel Underground Tanks for Flammable and Combustible Liquids".

3) Steel Tank Institute Standard No. sti-P_3®, "Specification for sti-P_3® System of Corrosion Protection of Underground Steel Storage Tanks—1983"

4) National Association of Corrosion Engineers Standard RP-01-69 (1983 Rev.) Recommended Practice—"Control of External Corrosion of Underground or Submerged Metallic Piping Systems."

(b) Corrosion resistant materials of construction such as special alloys, fiberglass reinforced plastic, or fiberglass reinforced plastic coatings, or equivalent approved system. Selection of the type of protection to be employed shall be based upon the corrosion history of the area and the judgement of a qualified engineer.

The authority having jurisdiction may waive the requirements for corrosion protection where evidence is provided that such protection is not necessary.

(See API publication 1615-1979, Installation of Underground Petroleum Storage Systems, for further information.*)

*Available from American Petroleum Institute, 2101 L. St., N.W., Washington, DC 20037.

Reprinted by permission from NFPA 30, "Flammable and Combustible Liquids Code—1984".
Copyright © 1984, all rights reserved/National Fire Protection Association
Batterymarch Park, Quincy, MA 02269

Also Note:
The BOCA **Basic Fire Prevention Code—1984**
And
The SBCCI **Standard Fire Prevention Code—1982 with 1984 Amendments**
have referenced NFPA 30 or adopted wording similar to it.

12-PE-12550 Litho in U.S.A. May 1984 Owens-Corning Fiberglas Corp., Fiberglas Tower, Toledo, OH 43659

7. Installation Procedure—Dry Hole

The same as single wall tanks.*

8. Installation Procedure—Wet Hole

The same as single wall tanks.*

9. Anchoring

The same as single wall tanks.*

10. Filling Primary Tank

The same as single wall tanks.*

11. Venting Primary Tank

The same as single wall tanks.*

12. Monitoring

The monitoring system and method is the responsibility of the tank owner and/or operator.

If the tank is monitored only on one end, the tank must be sloped so that the lowest elevation is the monitoring end.

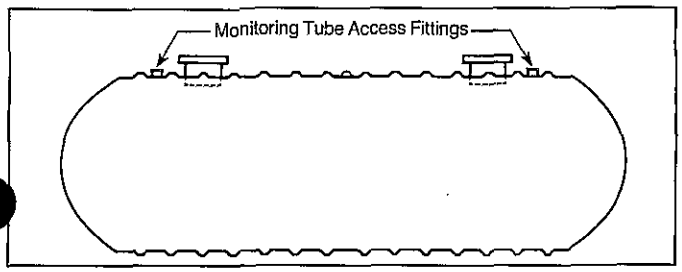

The Owens-Corning double wall tank is designed to accommodate a variety of monitoring systems. Every tank has a ½″ diameter monitoring tube—on both ends of the tank—to provide access to the space at the tank bottom between the inner and outer walls. A 4″ fitting next to the manway provides access to the monitoring tube.

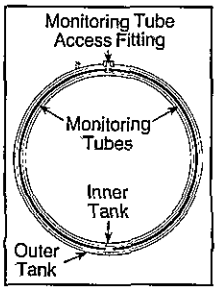

The cavity between the inner and outer walls should remain vented to the atmosphere. One of the monitoring tube access fittings can be piped as the cavity vent.

A flexible dipstick is provided with each tank in one of the monitoring tubes.

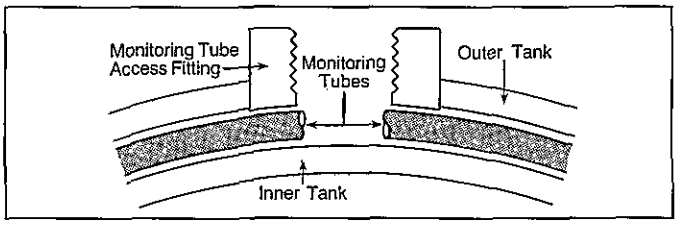

Other Optional Methods of Monitoring:

Cable or Wire Sensor (Not provided by Owens-Corning): The monitoring tube will accommodate a cable or wire sensor. The sensor is manually fed into the monitoring tube from the access fitting next to the manway.

Liquid Head Pressure Leak Detector (Optional from Owens-Corning): Owens-Corning recommends and supplies a leak detector system, which operates on the principle of liquid head pressure. (See Owens-Corning Fiberglas publication 3-PE-12707 for details). All Owens-Corning double-wall tanks are designed to interface and function with the liquid head pressure monitor.

Note: The liquid head pressure detector is not recommended for applications in freezing climates. Presently, the use of an antifreeze mixture in the tank cavity will void the Underwriters Laboratory rating of the tank. U.L. testing is currently underway and is expected to be completed in early 1985 to determine if an antifreeze mixture in the tank cavity is acceptable.

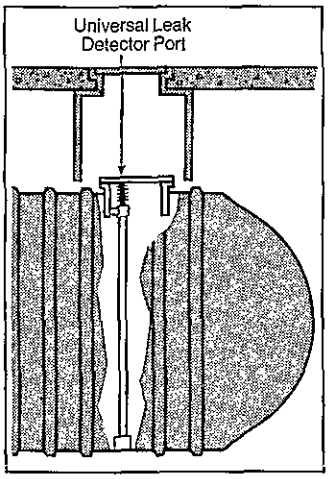

Other Detectors: As an option, the Owens-Corning double wall tank (8′ diameter only) can be equipped with a universal leak detector port. This 2″ ID port provides direct access to the space on the bottom of the tank between the inner and outer walls. The top of the port extends through one of the manway covers for potential access from grade. A strike plate is provided at the bottom of the port to prevent dipstick damage at the tank bottom.

13. Additional Information

For additional information on other installation details see Owens-Corning Fiberglas publication 3-PE-9632 and 3-PE-6304. If you have an installation situation that is not fully addressed in these instructions, contact your local Fiberglas tank sales representative. If you are unable to contact your local representative, call:

Fiberglas Tank Installation Manager
Toledo, Ohio
(419) 248-7371

For information on tank repairs, call:
Fiberglas Tank Field Service Supervisor
Toledo, Ohio
(419) 248-8196

*Single wall tank installation instructions are detailed in Owens-Corning Fiberglas publication 3-PE-6304.

OWENS-CORNING FIBERGLAS CORP.
Non-Corrosive Products Divison
Fiberglas Tower, Toledo, Ohio 43659

Pub. No. 3-PE-12681-A Litho in U.S.A., October, 1984

Copyright ©1984 Owens-Corning Fiberglas Corporation—all rights reserved

Double-Wall Fiberglas® Underground Storage Tanks

Installation Instructions

This document highlights the special installation requirements of the Owens-Corning double-wall tank. All other installation details are the same as single wall tanks. (See OCF Publication 3-PE-6304).

*Reg. TM—Owens-Corning Fiberglas Corp.

Fiberglas underground tanks must be installed according to these instructions and NFPA 30 and 31. Local codes may apply and should be consulted. Failure to follow these installation instructions will void the warranty and may result in tank failure. Proper installation of Fiberglas underground tanks is required to prevent tank damage and to insure long-term corrosion-resistant service. It is imperative to read, understand and follow the instructions below.

Fiberglas underground tanks require the backfill material to provide as much as 90% of the tank support. The installing contractor must be positive he has the correct bed and backfill and follows these instructions exactly.

If you have any questions call your local Fiberglas tank representative. The tank warranty is void if other than approved bed and backfill materials are used without written approval from Owens-Corning Fiberglas, of if alternate materials do not achieve 90% standard proctor density.

1. Handling

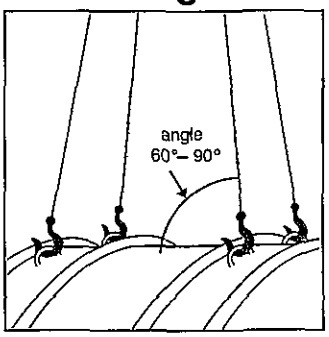

Double wall tanks cannot be unloaded from the truck manually; a crane or a backhoe of sufficient lifting capacity must be used. Do not use chains, cables, straps or ropes around the tank—these devices may "point-load" the tank and damage the tank wall.

Do not roll or drop tank. For temporary storage at the job-site, set tanks on smooth ground free of rocks and foreign objects and rechock.

2. Bed and Backfill The same as single wall tanks.*

3. Testing

Before setting the tanks in the hole, tighten all fittings. Pressure test 4′ through 8′ diameter tanks to 5 psi as follows:

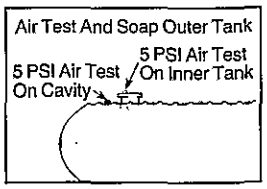

a. Outer Wall Test:
At the same time, pressure test both the inner tank and the cavity between the inner and outer tank for at least 30 minutes. Soap the outer tank and check for leaks as indicated by soap bubbles. An outer wall leak detected before backfilling is simple to repair. Do not backfill a tank with a known or suspected leak in the outer wall.

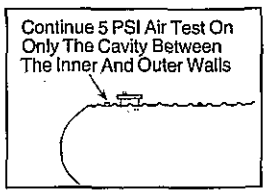

b. Inner Wall Test:
Release the pressure and vent the primary tank (by opening a manway fitting), but maintain the 5 psi pressure on the cavity between the inner and outer wall for another 30 minutes but no more than 60 minutes. Longer tests during rapidly increasing temperature may distort test results or could over-pressurize the tank. Use an air gauge with ¼ or ½ pound increments so that changes in pressure can be easily observed. Since there are manways, a tank with only an inner wall leak can be repaired in a backfilled condition.

If a tank leak is discovered with either of the above tests, call the Owens-Corning Field Service Supervisor to schedule a tank repair. Telephone: (419) 248-8196.

Do not approach endcaps or manways while tanks are under pressure.

4. Hole Size The same as single wall tanks.*

5. Burial Depth

Minimum burial depths are the same as single wall tanks.* Use of the optional liquid head pressure leak detector may affect maximum burial depth.

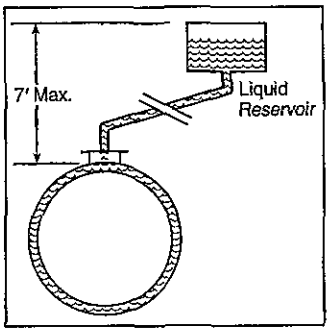

The liquid reservoir used with the liquid head pressure detector must be located no higher than 7 feet vertically from the tank top—this limits the liquid head pressure exerted on the tank.

The maximum tank burial depth will be limited by the 7-foot vertical restriction of the reservoir. Allow a minimum of 2 feet above grade for installation of the reservoir. Therefore, at jobsites with level grade, the maximum tank burial depth is 5 feet (7 feet less 2 feet). At jobsites with varying grade levels, the maximum tank burial depth should be calculated based on the 7-foot vertical limitation on the reservoir placement.

6. Filter Fabric—Hole Liner

The same as single wall tanks.*

Double-Wall Fiberglas* Tanks for Fuel Storage

Specification

Short Form:

The contractor shall provide double-wall *Fiberglas* underground storage tanks U.L. labeled for petroleum products in sizes and with fittings as shown on the drawings. The tanks shall be manufactured by Owens-Corning Fiberglas.

Tanks shall be tested and installed with pea gravel or approved alternate backfill material according to the current installation instructions (Owens-Corning Fiberglas publication 3-PE-6304 and 3-PE-12681) provided with the tank.

Long Form: Section 13410
GUIDE SPECIFICATION OWENS-CORNING FIBERGLAS DOUBLE-WALL REINFORCED POLYESTER UNDERGROUND STORAGE TANKS

Part I General

1.01 Related Work Specified In Other Sections.

A. Cast-in-Place Concrete: Section 03300

B. Anchor Bolts: Section 05501

C. Plastic Pipe: Section 15064

D. Liquid Level Gauges: Section 15174

E. Other Related Work – such as Excavation and Boiler Equipment

1.02 Quality Assurance

A. Acceptable Manufacturers: Owens-Corning Fiberglas Corp. Toledo, Ohio

B. Governing Standards:

1. ASTM Specification D4021-81. Glass Fiber Reinforced Polyester Underground Petroleum Storage Tanks.
2. U.L. 1316. Underwriters Laboratories, Inc., Glass Fiber Reinforced Plastic Underground Storage Tanks for Petroleum Products.
3. National Fire Protection Assoc. (NFPA 30) Flammable and Combustible Liquids Code and (NFPA 31) Standards for Installation of Oil Burning Equipment.
4. Factory Mutual File OFGA8.AF.
5. National Sanitation Foundation Testing Laboratory, January 1984, listing of Plastic Piping System Components And Related Materials, Standard 15.
6. Military Specification MIL-T-52777A, dated July 6, 1978, Tanks, Storage, Underground, Glass Fiber Reinforced Plastic.
7. General Services Administration, Public Building Service Guide Specification, PBS: 1568.

1.03 Submittals:

a. Shop Drawings: Contractors shall submit copies of shop drawings for each tank. Drawings shall include all critical dimensions and show locations of all fittings and accessories, i.e., manways, ladders, hold-down straps, heating coils, etc. Materials of construction shall be in accordance with Section 1.02 of this specification.

b. Catalog Data: Contractor shall submit copies of manufacturer's literature.

c. Certification Plate: U.L. labels for petroleum products shall be affixed to each tank.

d. Installation Instructions: Contractors shall submit copies of manufacturer's latest installation instructions.

e. Calibration Charts: Contractors shall submit copies of manufacturer's latest calibration charts.

Part II Products

2.01 Double-Wall *Fiberglas* Underground Storage Tanks.

A. Loading Conditions – Tank shall meet the following design criteria:

1. External hydrostatic pressure. Buried in ground with 7' of overburden over the top of the tank. The hole fully flooded and a safety factor of 5:1 against general buckling.
2. Surface loads: When installed according to manufacturer's installation instructions tanks will withstand surface H-20 axle loads (32,000 lbs./axle).
3. Internal load: Primary tank and annular space shall withstand pressure test of 5 psi on tanks of 4' through 8' diameters. Resulting in a 5 to 1 safety factor.
4. Tanks shall be designed to support accessory equipment such as heating coils, ladders, drop tubes, etc. when installed according to manufacturer's recommendations and limitations.

B. Product Storage Requirements:

1. All tanks must be vented. Tanks are designed for operation at atmospheric pressure only, except for use with vapor recovery systems providing the pressure or vacuum does not exceed 1 psi.
2. Tanks shall be capable of storing liquids with specific gravity up to 1.1.
3. Maximum temperature. Tanks shall be capable of storing gasoline, gasohol (90% gasoline and 10% ethanol mixture), AV gas, jet fuel, diesel fuel or potable water at ambient underground temperatures, or fuel oil at temperatures not to exceed 150°F at the tank interior surface.
4. Tanks shall be chemically inert to petroleum products.

C. Dimensional Requirements (refer to Owens-Corning literature on gallonage.)

1. Nominal capacity of the tank shall be gallons.
2. Nominal outside diameter of the tanks shall be feet.
3. Approximate overall length of the tanks shall be feet.

D. Annular Space

1. Tank shall have a space between the primary and secondary shell walls to allow for the free flow and containment of all leaked product from the primary tank.
2. Tank shall be designed to provide monitoring capability as noted:
   a. Accessibility to the tank bottom between the primary and secondary walls at both ends of the tank using a dipstick (one provided) or a cable/wire sensor (contractor provided). Tanks shall have one 4" NPT fitting located on both ends of the tank for flexible dipstick or wire sensor.
   b. Tank shall be compatible with a liquid head pressure-type monitor to continuously monitor the primary and secondary tanks. Maximum head pressure is seven feet over tank top with a 5:1 safety factor.

2.02 Accessories

A. Anchor Straps – Provide glass fiber-reinforced plastic anchor straps for each tank shown. Number and location of straps shall be as specified by manufacturer. Each strap shall be capable of withstanding the bouyancy load for tank diameter as shown.

4'o – 4,200 lbs. 8'o – 25,000 lbs. 12'o – 26,000 lbs.
6'o – 18,000 lbs. 10'o – 32,000 lbs

Straps shall be standard as supplied by the tank manufacturer.

B. Certification Plate – Underwriters' Laboratory label shall be permanently affixed to each tank.

C. Flanged Manways

1. The standard manways to be 22" I.D. The 30" and 36" I.D. manways are optional. Two 22" standard manways are provided with each 8' diameter tank. One 22" standard manway is provided with each 4' diameter tank.
2. All manways will be furnished complete with U.L. listed gaskets, bolts and covers.
3. Location – refer to drawings for location.
4. Manway risers 48" in diameter and 42" high will be supplied to provide access to the manway lid. A 24" × 24" galvanized street box with a cover must be provided by contractor for at grade installation.
5. Fiber glass manway extension tubes 24" long will be provided for the manways as outlined in section 3 above.
6. Each standard steel manway cover shall have three 4" NPT fittings welded in place at 120-degrees spacing. The 22" manway cover fittings are on an 8" radius from the center of the cover to the centerline on the fitting. The 30" manway cover fittings are on a 12" radius; the 36" manway cover fittings are on a 15" radius.

D. Fill Tubes

1. Tubes shall be fiber glass-reinforced plastic.
2. Tubes shall be factory installed, 4" diameter, and shall include a 6" steel fitting with a double tapped reducer bushing to 4" diameter.
3. Tubes shall be standard items as manufactured and installed by the tank manufacturer.
4. FRP fill tubes supplied by Owens-Corning. Other fill tubes of appropriate design can be supplied by contractor.
5. Location – refer to drawings for location.

E. Heating Coils/Hotwells

1. Heating Coils – shall be standard item as manufactured and/or supplied by the tank manufacturer including 22" manway.
2. Location – refer to drawings for location.

F. Fittings-Threaded – NPT

1. All threaded fittings on U.L.-labeled tanks for storage of petroleum products shall be of a material of construction consistent with the requirements of the U.L.-label. All fittings to be supplied with threaded plugs.
2. All standard threaded fittings are 4" in diameter and shall be half couplings. Reducers are to be used for smaller sizes where specified and provided by contractor.
3. Thread Standards – All threaded fittings shall have machine tolerances in accordance with the ANSI standard for each fitting size.
4. Strength – NPT fittings will withstand a minimum of 150 foot-pounds of torque and 1,000 foot-pounds of bending, both with 2:1 factor of safety.
5.

Sizes	Standard	Other Sizes
Inlet	4"	_____
Outlet	4"	_____
Vent	4"	_____
Gauge	4"	_____
Fill	4"	_____

6. Location – refer to drawings for location.
7. Suction Line – Shall be installed on site by the contractor. Diameter of pipe and grade and schedule as called out in other sections.
8. Return Line – Shall be installed on the site by the contractor. Diameter of pipe and grade and schedule as called out in other sections.
9. All rigid piping shall be terminated 4" from the bottoms of four, and eight foot diameter tanks.

G. Ladders – Shall be standard carbon steel supplied by the tank manufacturer. Refer to drawings for location.

H. Lifting Lugs – Provide lifting lug(s) on all tanks. Lugs shall be capable of withstanding weight of tank with a safety factor of 3 to 1.

I. Monitor Fitting (Universal Leak Detector Port)
Tanks with 8' diameter shall have a 2" NPT monitoring fitting with a 2" straight verticle tube to provide access to the tank bottom between the primary and secondary tank. The tube assembly will be furnished with a U.L. listed strike plate and flexible coupling. The monitoring fitting will be located in one of the steel manway covers.

Part III Execution

3.01, 3.02 Installation and testing

Tanks shall be tested and installed according to the current installation instructions provided with the tank (refer to Owens-Corning Fiberglas publication 3-PE-6304 and 3-PE-12681 and include as part of your specification).

OWENS-CORNING FIBERGLAS CORP.
Non-Corrosive Products Divison
Fiberglas Tower, Toledo, Ohio 43659

Pub. No. 3-PE-12748 Litho in U.S.A., August, 1984

Copyright ©1984 Owens-Corning Fiberglas Corporation—all rights reserved

Liquid Head Pressure Monitor

For Owens-Corning Double-Wall Tanks

An Optional Monitoring System That's Simple and Totally Reliable

The primary function of a tank monitor is to detect a breach in the inner or outer tank under all circumstances. Only a pressure type system will fulfill this criteria. Owens-Corning recommends and supplies a leak detector system, which works on the principle of liquid head pressure.

This simple device, which has no moving parts or complicated control package, is also failsafe. In the unlikely event of an inner tank leak, the liquid media in the cavity (the space between the two walls of the tank) flows into the inner tank, thereby preventing any stored product from escaping from the inner tank, into the cavity.

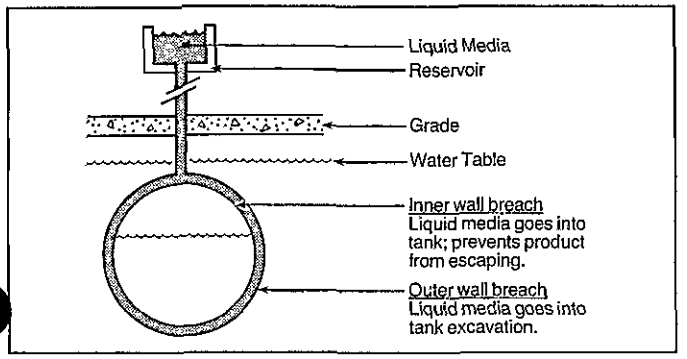

The major component is a 5-gallon translucent reservoir, which is piped (contractor provided) to the tank and then filled with tap water.* A drop in the liquid level of the reservoir (indicating a tank leak) can be visually observed.

Reservoir—Model R5

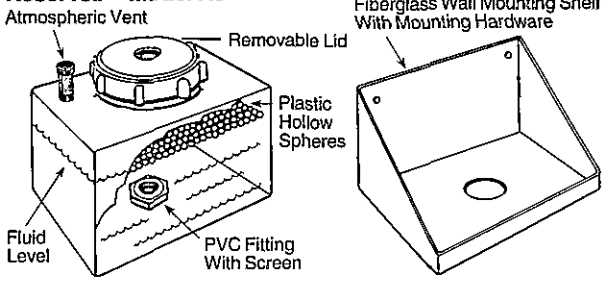

Evaporation in the reservoir could be misinterpreted as a tank leak. To eliminate this possibility plastic hollow spheres floating on the surface of the fluid within the reservoir are used to control evaporation.

Up to four-12,000 gallon tanks can be individually monitored by one common 5-gallon reservoir. Larger tank installations require additional reservoirs. Typical piping layouts are presented on the backside of this document.

An optional electronic control panel for continuous monitoring and instant alarm is available in a number of configurations. The liquid sensing probe assembly is ready to mount to the reservoir (contractor provides the wiring from the probe assembly to the control panel). The electronic control panel senses the presence of liquid in the reservoir by measuring the conductance between the two stainless steel probes on the probe assembly. The UL listed control panel is complete with warning bell, panel lights, and transmission contacts for other optional warning devices (contractor provided) such as a telephone dialer, a light beacon, etc.

Optional Control Panel And Probe Assembly

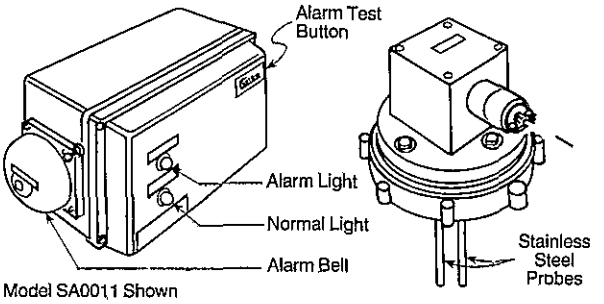

Model SA0011 Shown

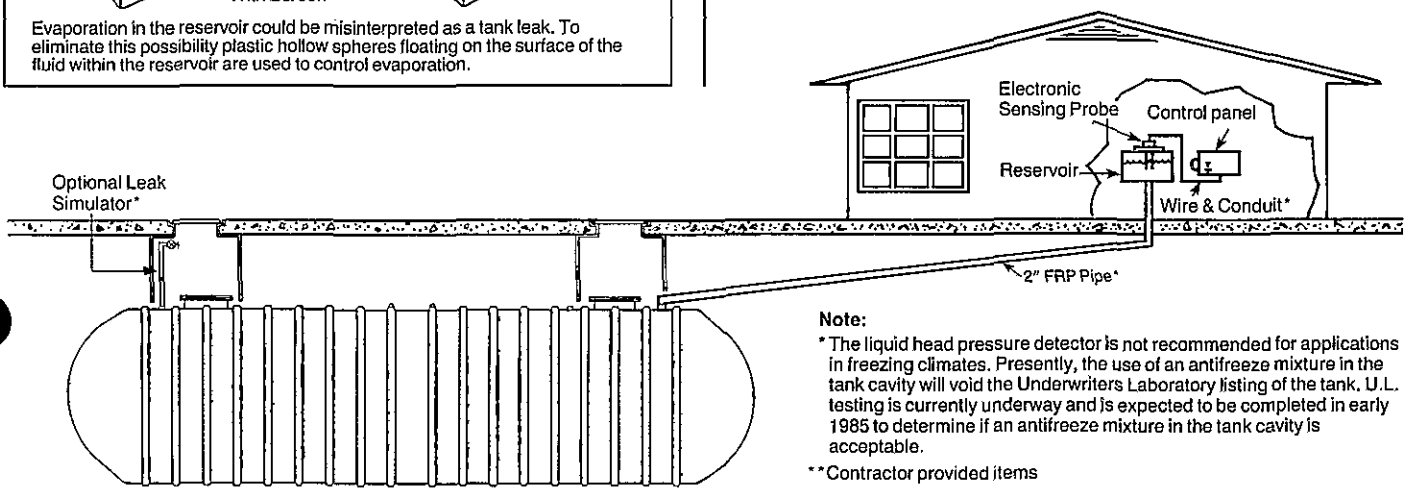

Note:

* The liquid head pressure detector is not recommended for applications in freezing climates. Presently, the use of an antifreeze mixture in the tank cavity will void the Underwriters Laboratory listing of the tank. U.L. testing is currently underway and is expected to be completed in early 1985 to determine if an antifreeze mixture in the tank cavity is acceptable.

** Contractor provided items

Typical Piping Configurations

(all piping materials provided by contractor)
Double wall storage tanks can be individually monitored using one of two methods:

a. Independent Monitoring
Independently pipe each tank to a separate reservoir. An optional multiple tank control panel (model SA0014 or SA0014X) is used to monitor up to four separate reservoirs.

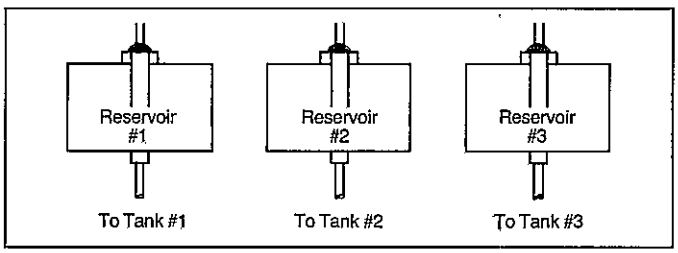

b. "Sight Glass" Manifold
Independently pipe each tank to one common liquid reservoir. At the reservoir the piping is manifolded together using standard piping components (contractor supplied). The fiberglass pipe serves as a "sight glass" on the manifold to distinguish which tank system is breached.

If the optional control panel is specified, a single circuit control panel (model SA0011 or SA0011X) is used to monitor the common resevoir.

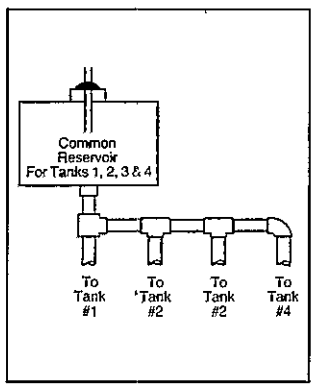

Table A

Nominal Tank Capacity	Maximum Number of Tanks/5-Gallon Reservoir
DWT-4 550	10
DWT-4 1,000	6
DWT-1 4,000	8
DWT-1 6,000	6
DWT-1 8,000	5
DWT-1 10,000	4
DWT-1 12,000	4

For multiple tank installations using the "sight glass" manifold, additional reservoirs may be required to handle varying liquid reservoir levels resulting from thermal changes:

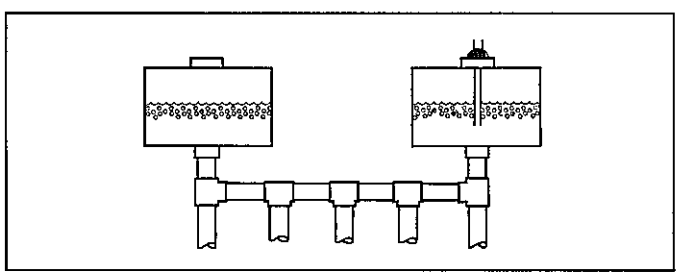

Optional Leak Simulator

An optional leak simulator can be fabricated by the contractor at the jobsite. This device (piping and a valve) will allow the tank owner to periodically simulate a tank leak to test the liquid head pressure detector.

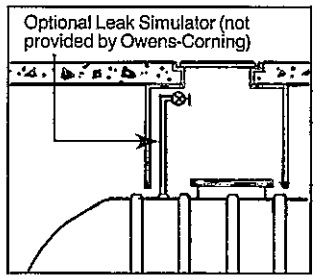

Optional Electronic Control Panel

Two basic types of control panels are available:

MODEL SA0011 is a single-circuit control panel (with one probe assembly) which is used to individually monitor a group of tanks manifolded to a common reservoir (See "Sight Glass" manifold piping configuration) or one individual tank.

MODEL SA0014 is a four-circuit control panel (with four probe assemblies) which is used to monitor up to four separate reservoirs (see independent monitoring piping configuration).

Both control panel models are constructed of solid state electronic components and are UL listed. The control panel power source is 120 volts A.C. (contractor provided wiring). The probe assembly circuit is an intrinsically safe circuit, i.e., the circuit is incapable of releasing sufficient electrical or thermal energy to cause ignition of specific hazardous materials under "normal" or "fault" operating conditions.

Features	Model SA0011*	Model SA0014**
Number of monitoring circuits	1	4
Number of electronic sensing probe assemblies	1	4
Electrical components rating	Weatherproof* (NEMA 4X)	Weatherproof** (NEMA 4X)
Dimensions	10"H × 14"W × 8"D	20"H × 17"W × 10"D

All control panels include:

- Panel lights for each circuit
- Alarm test button for each circuit
- Warning bell
- Transmission contacts (normally open) for phone dialer. (Not provided by Owens-Corning).
- Panel housing materials: fiberglass
- Two spare light bulbs
- Wall mounting hardware

Note: All wiring materials are provided by the contractor. Wiring is required from the power source to the control panel and from the control panel to the probe assembly.

*Available as explosion proof (NEMA 7X) option (Model SA0011X)

**Available as explosion proof (NEMA 7X) option (Model SA0014X)

OWENS-CORNING FIBERGLAS CORP.
Non-Corrosive Products Division
Fiberglas Tower, Toledo, Ohio 43659

Pub. No. 3-PE-12707-B Litho in U.S.A., October, 1984

Copyright ©1984 Owens-Corning Fiberglas Corporation—all rights reserved

Fiberglas® Tanks for Underground Fuel Storage

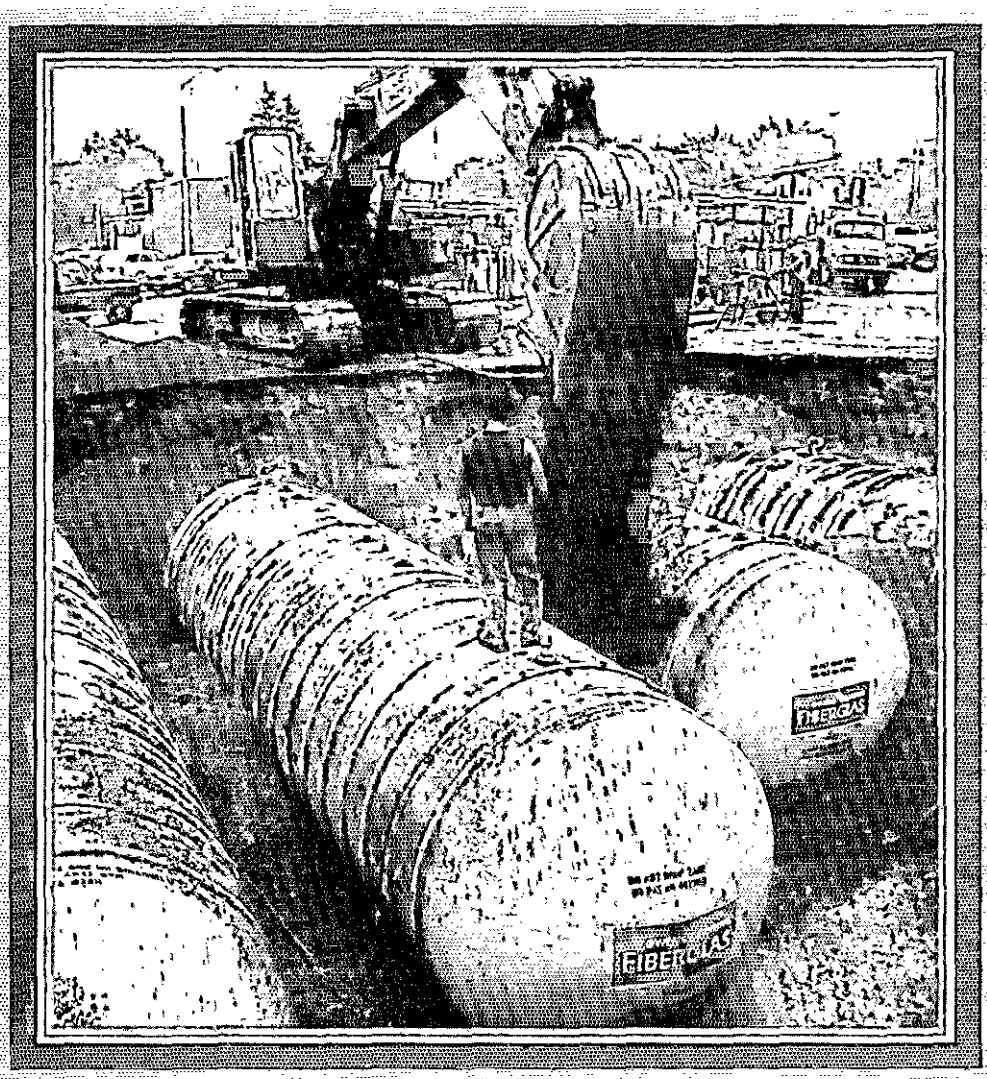

Fiberglas petroleum storage tanks mean greater dependability over the life of your storage system. Without maintenance.

There's one basic difference between Owens-Corning Fiberglas underground tanks and tanks made from steel. Fiberglas tanks won't corrode

A Fiberglas underground tank will last the life of most facilities without corrosion-caused leaks or failures.

Corrosion-caused replacement costs are eliminated, as are periodic corrosion testing procedures, and the additional expense and concern over environmental problems due to leakage.

Fiberglas underground tanks. . .from Owens-Corning Fiberglas Corporation.

Long Life

Fiberglas underground storage tanks are used to store petroleum fuels at ambient underground temperatures,not to exceed 150°F. Tanks to be used to store any other materials must be cleared with Owens-Corning Fiberglas before purchase and installation.

Fiberglas tanks are impervious to the effects of external corrosion. Because they will not leak due to corrosion, Fiberglas underground tanks eliminate worries over pollution and related environmental problems.

Corrosion is caused by a direct current discharge from underground steel tanks. There are two sources of corrosion of steel tanks: galvanic action and stray electrical currents.

Galvanic action is an electrical cell phenomenon – which produces current. It is caused by such things as dissimilar metal, varying steel tank surface conditions and non-homogeneous backfill. These conditions even vary within a single installation – so that when testing soil resistivity, several tests must be made at different points of the same site over a period of time, to make the resistivity test results valid and useful. Conditions which indicate that corrosion will occur from galvanic action include: soil resistivity, soil pH, differential oxygen (different levels of oxygen exist at different points around steel tanks), new steel added to installation with old steel tanks, and anaerobic bacteria. Other variable factors, which may contribute to corrosion include: high water table, cinders, landfill, de-icing salts, fertilizers and septic tanks.

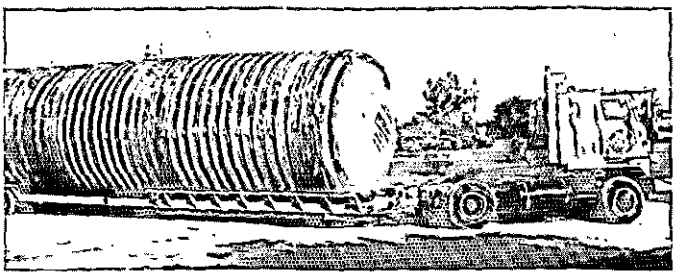

Stray electrical currents are man-made. Through grounding, these man-made electrical currents return to their source, taking the path of least resistance. The current will travel along underground steel tanks, taking metal ions from the tank as the current leaves the tank, resulting in corrosion.There is no steel tank protective system that is effective against stray current corrosion.

Internal rust, contributing to many steel tank leaks and failures, is also eliminated with Fiberglas underground tanks. External protection will do nothing to prevent internal rust. Factors which contribute to internal rust include: condensation from the product, oxygen, formation and deposition of sludge, climatic conditions, and the presence of bacteria.

In over 18 years and 85,000 installations there has never been a leak caused by external or internal corrosion with a Fiberglas underground petroleum storage tank.

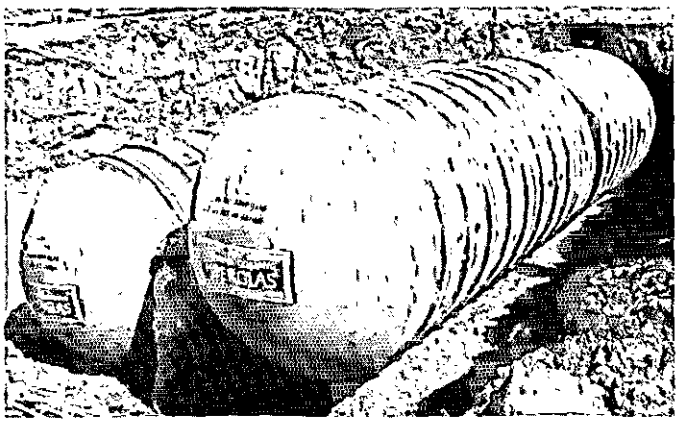

Reliable

As further assurance of their reliability, Fiberglas tanks and standard manufacturing processes were inspected and listed for storage of petroleum products by Underwriters Laboratory in 1965. Test data gathered since 1965 indicates that Owens-Corning Fiberglas underground tanks will last the economic design life of most facilities.

Maintenance Free

Because Fiberglas tanks are not susceptible to corrosion, they're maintenance free. There's no need for periodic testing, record keeping or replacement of cathodic protection systems. You save the difference in time, money and concern over the service life of the tank and avoid potential financial liabilities.

Strong and Durable

Properly installed, Fiberglas tanks are strong enough to withstand constant traffic from the heaviest over-the-road vehicle (H-20 axle loads – 32,000 lbs./axle).

Fiberglas underground tanks were designed to meet specific performance criteria in dry or fully flooded holes when properly installed. An empty tank may be installed (with specified backfill completely around tank) with 7' of water over the tank top with a 2:1 safety factor against external hydrostatic pressure.

All tanks must be vented, as tanks are designed for operation at atmospheric pressure only, except for use with vapor recovery systems provided the pressure or vacuum does not exceed 1 psi.

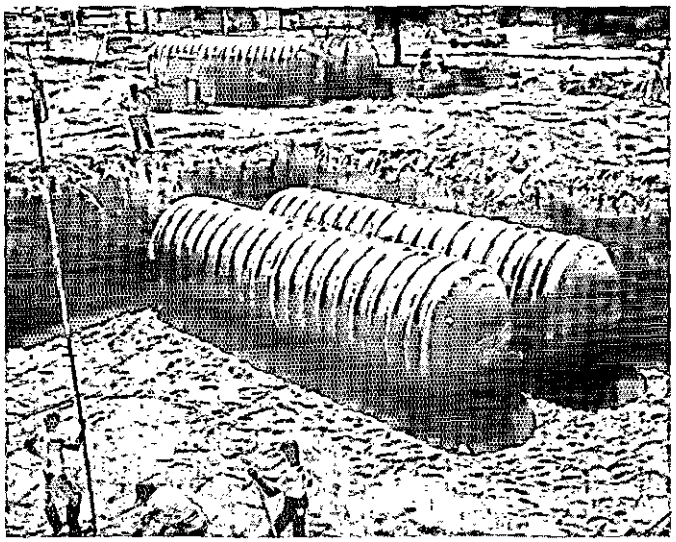

National Availability

Manufacturing plants located in Mt. Union/Huntingdon, Pa., Valparaiso, Ind., Conroe, Tex., Bakersfield, Cal., and Auburndale Florida, assure rapid delivery of Fiberglas tanks to any part of the United States.

Model D-3 & G-6 Standard Manway

D-3 20,000 Gallon Mfg. Pt: B, M, V.

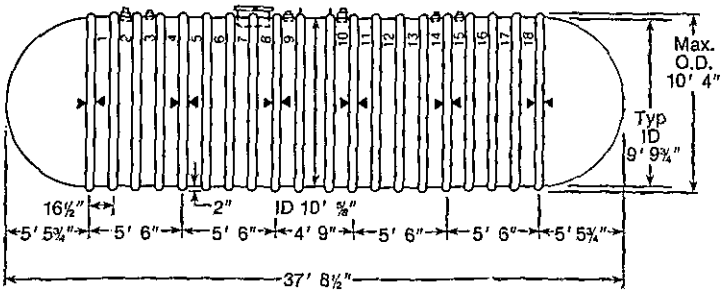

D-3 15,000 Gallon Mfg. Pt: B, M, V.

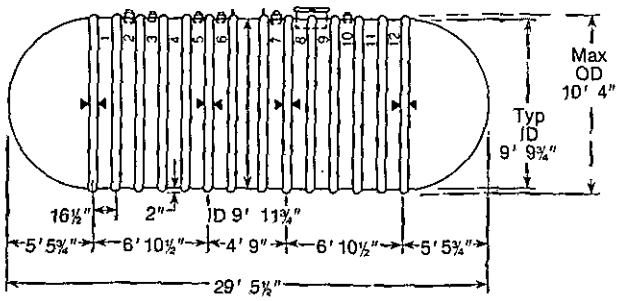

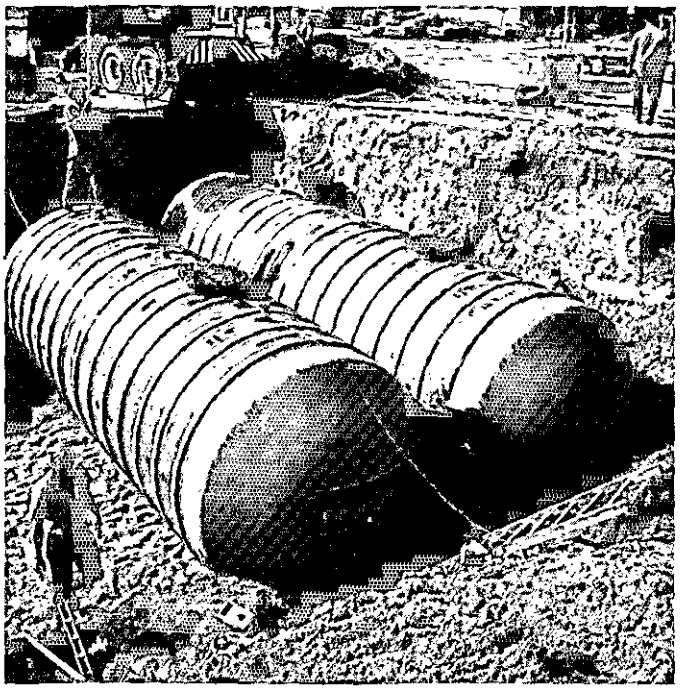

G-6 12,000 Gallon Mfg. Pt: B, C, M, V.

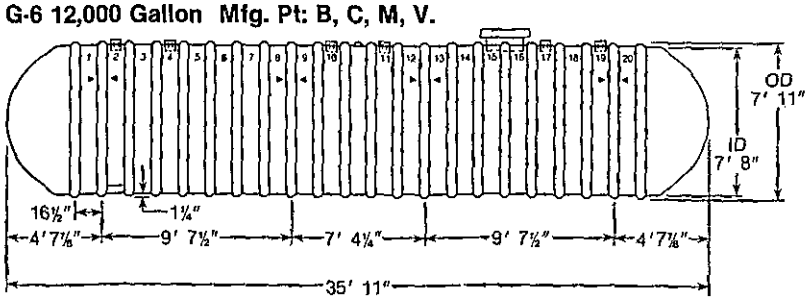

G-6 10,000 Gallon Mfg. Pt: B, C, M, V.

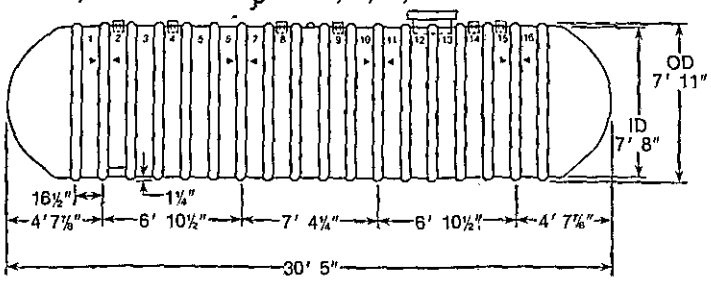

Manufacturing Point – Code
B = Bakersfield, CA
C = Conroe, TX
M = Mt. Union, PA
V = Valparaiso, IN

STANDARD MANWAY TANK DATA

NOMINAL CAPACITY & MODEL	ACTUAL CAPACITY (gals.)	STANDARD NPT FITTING POSITIONS	NOMINAL WEIGHT (lbs.)
20,000 D-3	19,810	**4"** 3, 9, 14, 15 **6"** (2) (10)	5,270
15,000 D-3	14,947	**4"** 3, 5, 6, 10 **6"** (2) (7)	4,052
12,000 G-6	11,630	**4"** (2) 4, 10, (11) 17, (19)	3,645
10,000 G-6	9,730	**4"** (2) 4, 8, (9) 14, (15)	2,915

Standard manway tank notes

1. Hold-down strap rib locations are indicated by arrows ► ◄.
2. ◯ Indicates location of 12" sq. FRP encapsulated steel deflector plate under fitting opening for gauging tank.
3. Manways are located in positions: 12 and 13 for G-6 10,000 gallon tanks; 15 and 16 for G-6 12,000 gallon tanks; 8 and 9 for D-3 15,000 gallon tanks; and 7 and 8 for D-3 20,000 gallon tanks.

Model D-3, D-6

D-3 20,000 Gallon Mfg. Pt: B, M, V.

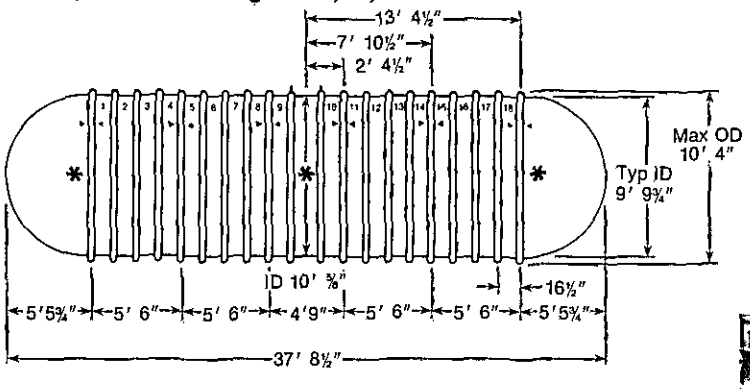

D-3 15,000 Gallon Mfg. Pt: V, M, V.

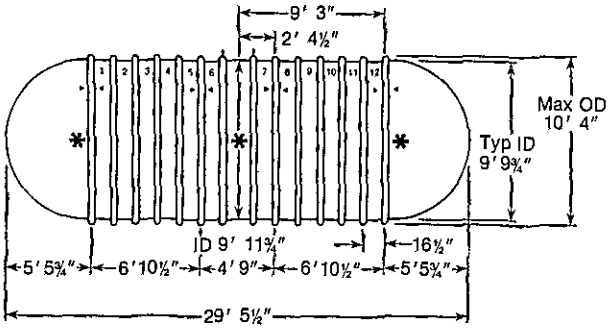

D-6 6,000 Gallon Mfg. Pt: M.

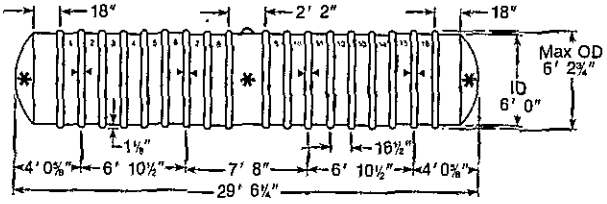

D-6 4,000 Gallon Mfg. Pt: B, C, M, V.

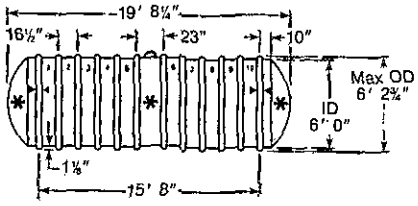

D-6 2,000 Gallon Mfg. Pt: B, C, M, V.

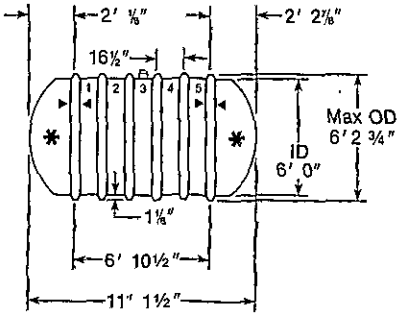

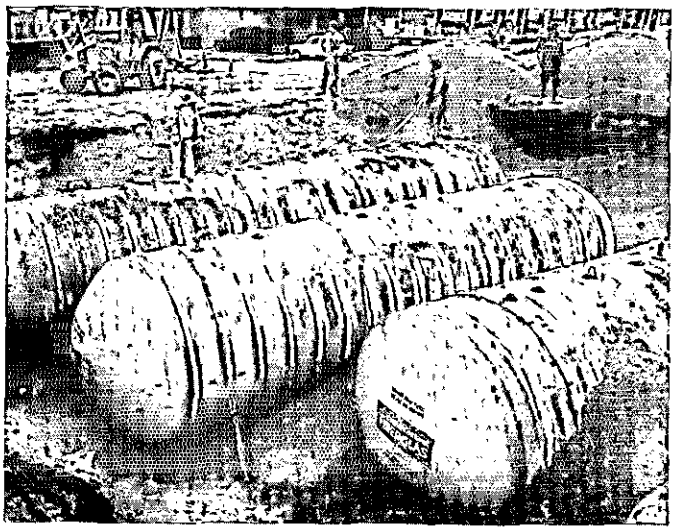

Manufacturing Point – Code
B = Bakersfield, CA
C = Conroe, TX
M = Mt. Union, PA
V = Valparaiso, IN

STANDARD TANK DATA

NOMINAL CAPACITY & MODEL	ACTUAL CAPACITY (gals.)	STANDARD NPT FITTING POSITIONS	NOMINAL WEIGHT (lbs.)
20,000 D-3	19,807	**4"** 3, 9, 14, 15 **6"** 2, 10	4,940
15,000 D-3	14,947	**4"** 3, 5, 6, 10 **6"** 2, 7	3,722
6,000 D-6	*5,997*	*4"* 2, 4, 7, 8, 12, 13	*1,600*
4,000 D-6	3,918	**4"** 1, 3, 5, 6, 9, 10	1,100
2,000 D-6	2,087	**4"** 1, 2, 3, 5	630

Standard tank notes

1. Hold-down strap rib locations are indicated by arrows ►◄.
2. Standard fittings are 4" NPT half-couplings on all tanks, except 4" and 6" NPT half-couplings on 15,000 and 20,000 gallon tanks.
3. ◯ Indicates location of deflector plate under fitting opening for gauging tank.

Made-to-order tank notes

1. 6" and 8" NPT fittings cannot be located adjacent to lifting lug ribs on 15,000 and 20,000 gallon tanks.
2. Fittings cannot be installed on locations marked ∗.
3. Manways cannot be located over end rib on any size tank. Manway may be located over rib next to center joint on 15,000 and 20,000 gallon tanks (requires movement of lift lugs to third rib from center joint).
4. FRP encapsulated steel deflector plate (12" sq.) under fitting opening for gauging tank must be specified.

Model D-5, G-6

G-6 12,000 Gallon Mfg. Pt: B, C, M, V.

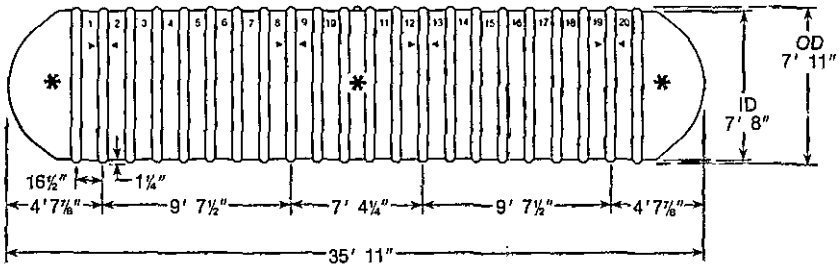

G-6 4,000 Gallon Mfg. Pt: B, C, M, V.

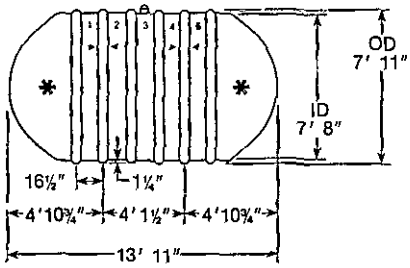

G-6 10,000 Gallon Mfg. Pt: B, C, M, V.

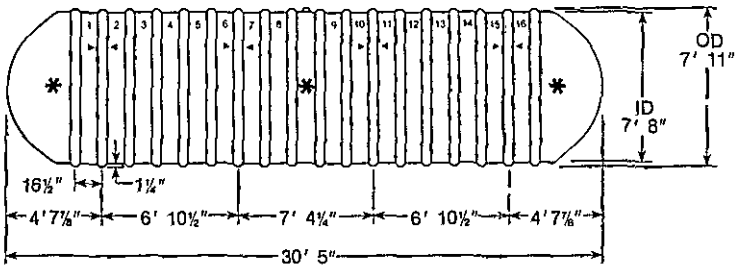

D-5 1,000 Gallon Mfg. Pt: B, C, M, V.

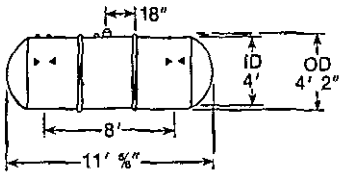

G-6 8,000 Gallon Mfg. Pt: B, C, M, V.

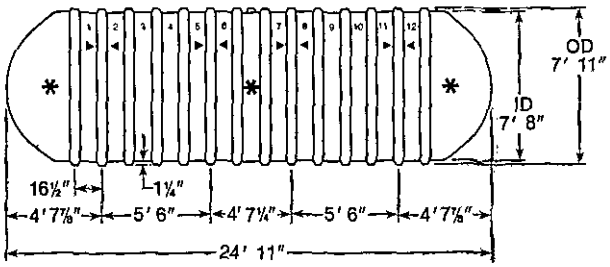

D-5 550 Gallon Mfg. Pt: V, C, M, V.

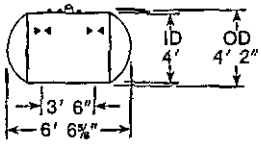

G-6 6,000 Gallon Mfg. Pt: B, C, M, V.

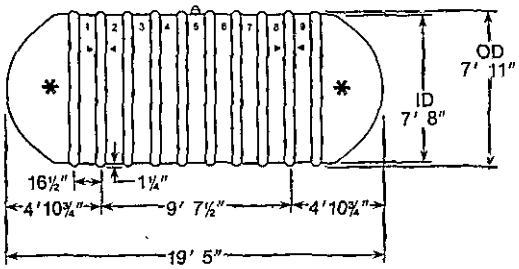

Manufacturing Point – Code
B = Bakersfield, CA
C = Conroe, TX
M = Mt. Union, PA
V = Valparaiso, IN

STANDARD TANK DATA

NOMINAL CAPACITY & MODEL	ACTUAL CAPACITY (gals.)	STANDARD NPT FITTING POSITIONS	NOMINAL WEIGHT (lbs.)
12,000 G-6	11,630	4" 2, 4, 10, 11, 17, 19	3,345
10,000 G-6	9,730	4" 2, 4, 8, 9, 14, 15	2,615
8,000 G-6	7,830	4" 2, 4, 6, 7, 10, 11	2,075
6,000 G-6	5,430	4" 2, 3, 4, 5, 8, 9	1,505
4,000 G-6	4,030	4" 1, 2, 3, 5	1,220
1,000 D-5	971	4" 1, 2, 3, ctr.,	400
550 D-5	548	4" 1, 2, ctr., 4	280

Standard tank notes

1. Hold-down strap rib locations are indicated by arrows ► ◄. *Straps to be located on tank shell wall on 550 and 1000 gallon model tanks only.*
2. *Standard fittings are 4" NPT half-couplings on all tanks.*
3. ◯ Indicates location of deflector plate under fitting opening for gauging tank.

Made-to-order tank notes

1. Fittings cannot be installed in locations marked ∗.
2. Manways cannot be located over end rib on any size tank.
3. FRP encapsulated steel deflector plate (12" sq.) under fitting *opening for gauging tank must be specified.*

Model D-3 — 12′ diameter, MADE-TO-ORDER

D-3 48,000 Gallon Mfg. Pt: V.

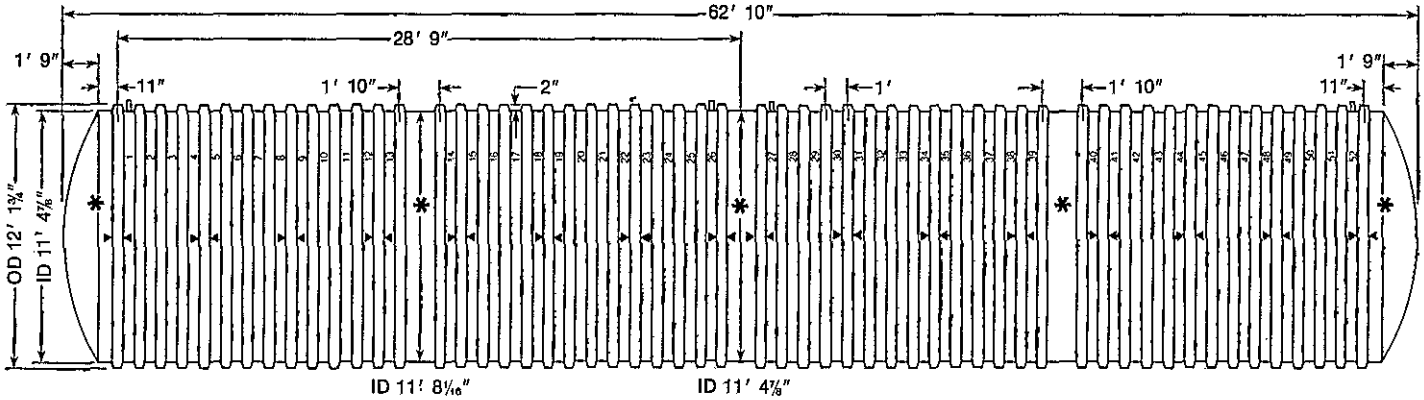

D-3 40,000 Gallon Mfg. Pt: V.

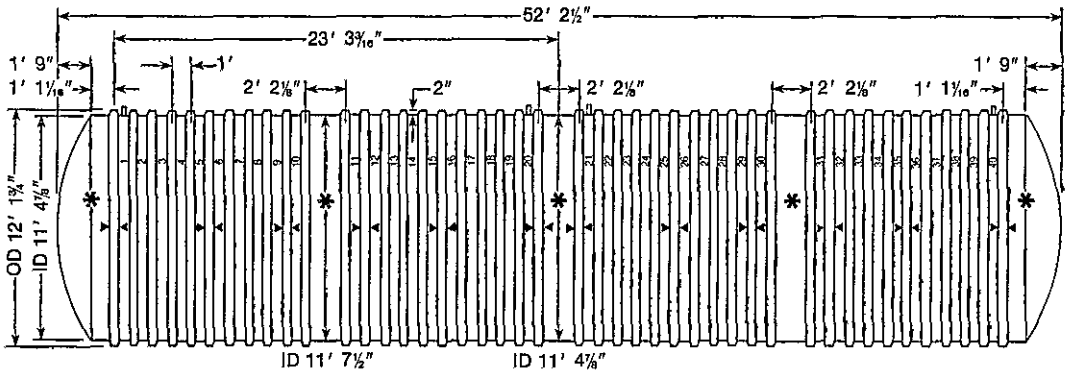

D-3 30,000 Gallon Mfg. Pt: M, V.

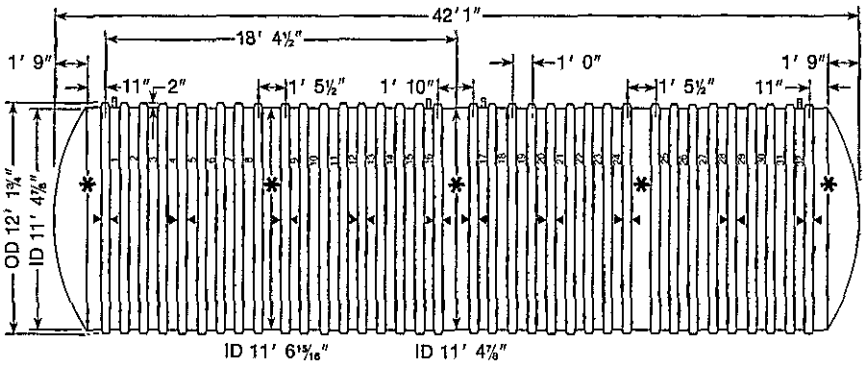

D-3 25,000 Gallon Mfg. Pt: M, V.

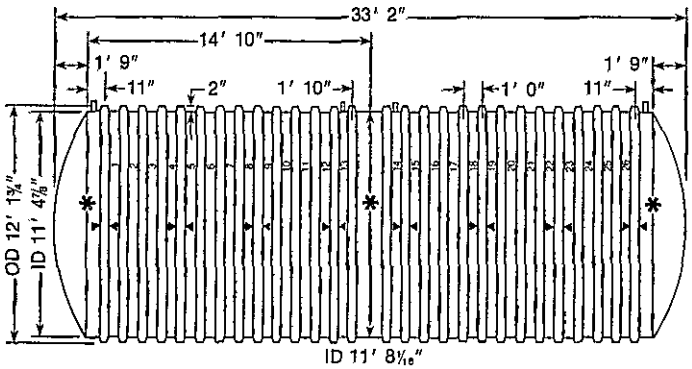

Manufacturing Point – Code
B = Bakersfield, CA
C = Conroe, TX
M = Mt. Union, PA
V = Valparaiso, IN

12′ DIAMETER TANK DATA

NOMINAL CAPACITY & MODEL	ACTUAL CAPACITY (gals.)	NOMINAL WEIGHT (lbs.)
48,000 D-3	47,661	11,925
40,000 D-3	39,195	9,800
30,000 D-3	31,205	7,800
25,000 D-3	24,476	6,120

12′ Diameter made-to-order tank notes

1. Hold-down strap rib locations are indicated by arrows ➡ ⬅.
2. Fittings cannot be installed in locations marked ✱. Fittings cannot be installed in adjacent rib spaces.
3. All 12′ diameter tanks must have manways. Manways cannot be located over end rib on any size tank.
4. FRP encapsulated steel deflector plate (12″ sq.) under fitting opening for gauging tank must be specified.

Model D-6 — 12′ diameter, MADE-TO-ORDER

D-6 48,000 Gallon Mfg. Pt: B.

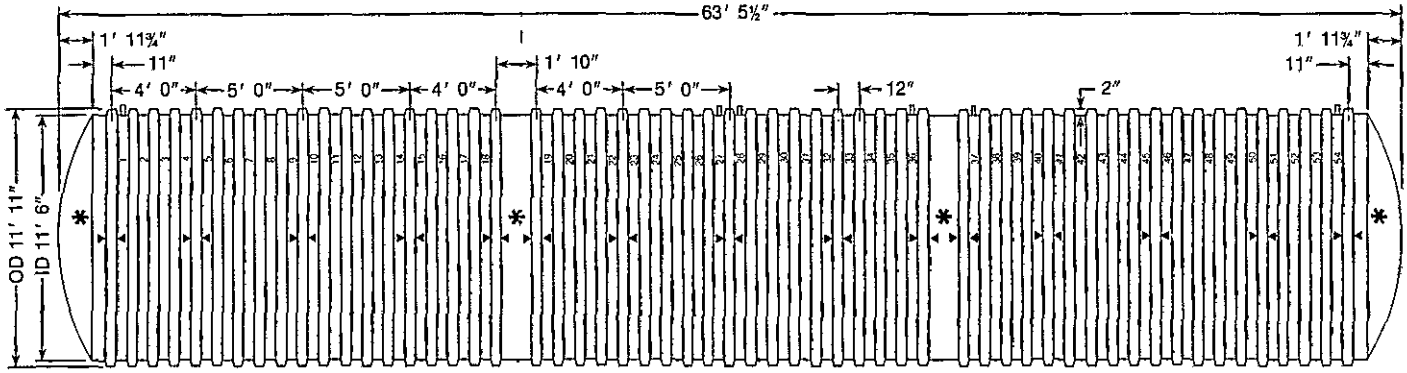

D-6 40,000 Gallon Mfg. Pt: B.

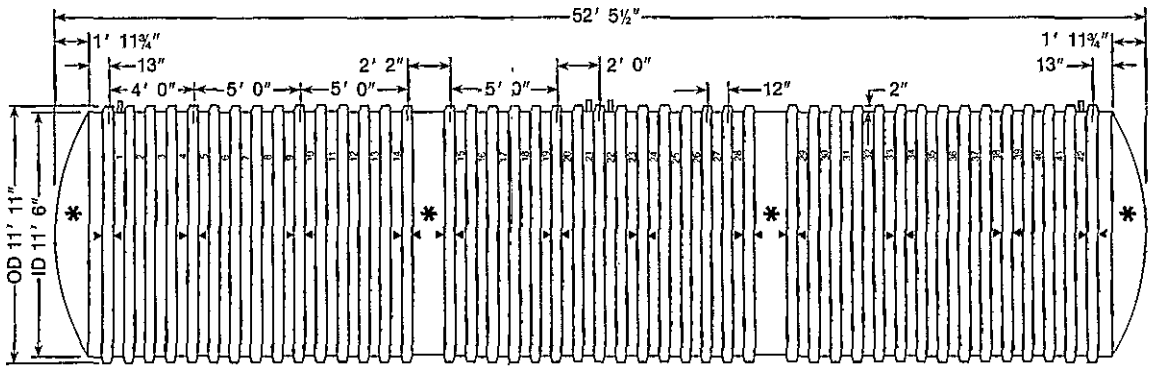

D-6 30,000 Gallon Mfg. Pt: B.

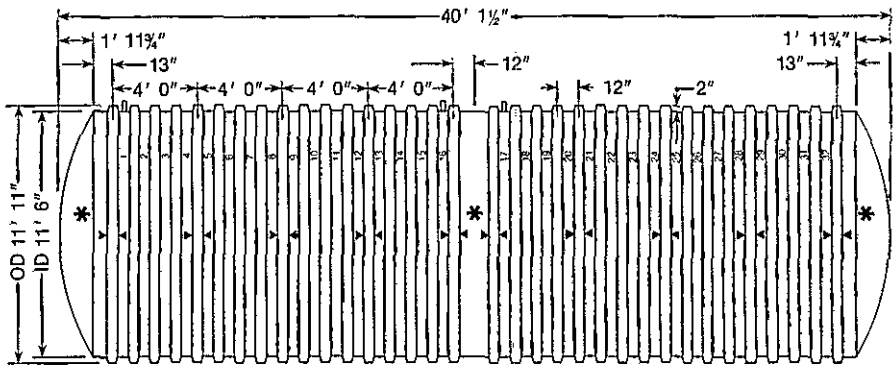

Manufacturing Point – Code
B = Bakersfield, CA
C = Conroe, TX
M = Mt. Union, PA
V = Valparaiso, IN

D-6 25,000 Gallon Mfg. Pt: B.

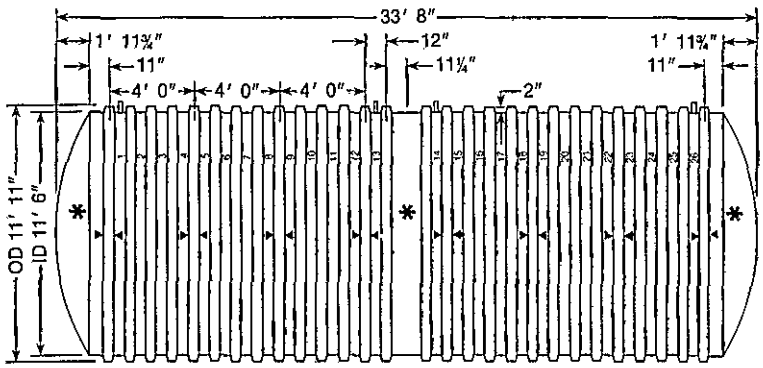

12′ DIAMETER TANK DATA

NOMINAL CAPACITY & MODEL	ACTUAL CAPACITY (gals.)	NOMINAL WEIGHT (lbs.)
48,000 D-6	47,830	11,900
40,000 D-6	39,283	9,800
30,000 D-6	29,700	7,800
25,000 D-6	24,682	6,120

12′ Diameter made-to-order tank notes

1. Hold-down strap rib locations are indicated by arrows ► ◄.
2. *Fittings cannot be installed in locations marked ✱.* Two fittings cannot be installed immediately adjacent to one another.
3. All 12′ diameter tanks must have manways. Manways cannot be located over end rib on any size tank.
4. FRP encapsulated steel deflector plate (12″ sq.) under fitting opening for gauging tank must be specified.

Fiberglas Standard Flanged Manways

Manways can be installed centered over any of the tank ribs except for end ribs, lift lug ribs or hold-down strap ribs. The standard manway (bearing loads to 1200 lbs.) is 22 inches in diameter equipped with an epoxy painted carbon steel cover and includes a gasket and 24 zinc coated ½" × 1½" bolts, nuts and washers. Fiberglas extension tubes or epoxy painted steel 22", 30" and 36" diameter extension tubes are available in two foot lengths which include extra gasket and set of nuts, bolts and washers.

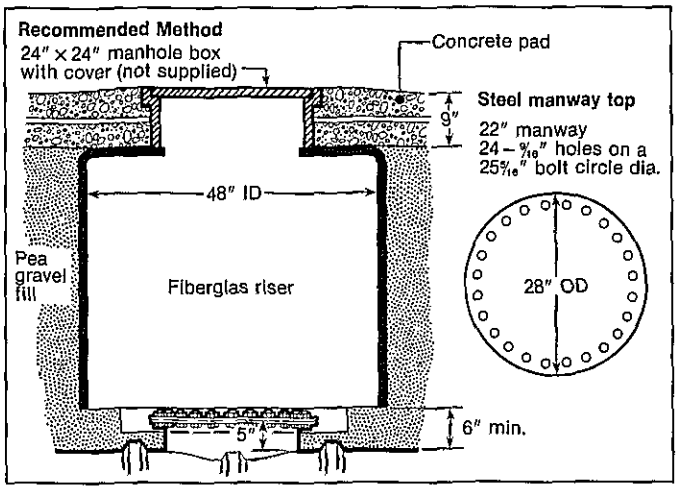

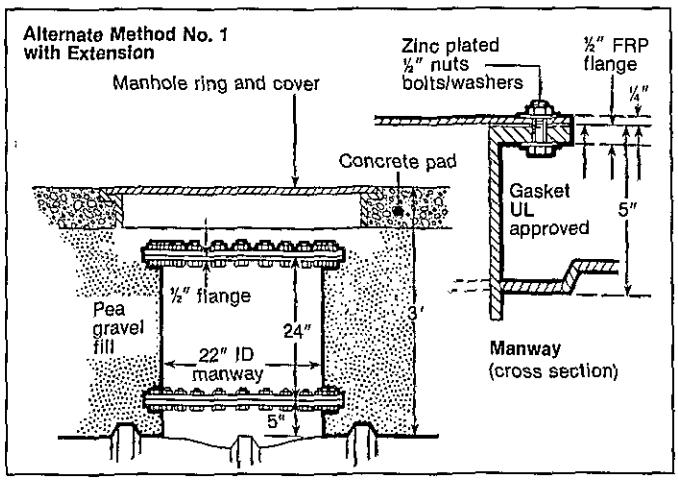

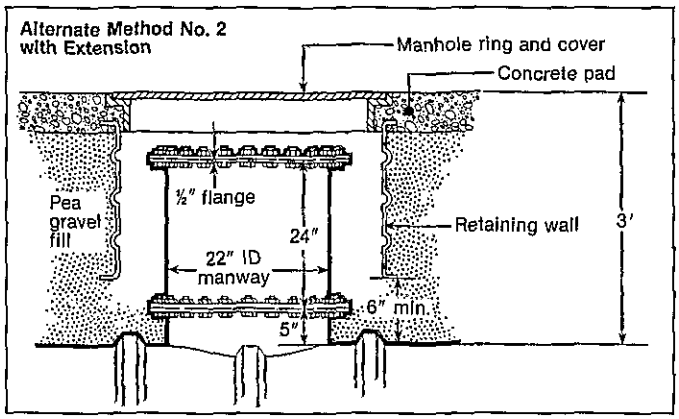

Large Diameter Manways for 8', 10' and 12' diameter tanks

A 30" or 36" Fiberglas flanged manway can be installed over any tank ribs, except over end ribs, lift lug ribs or hold-down strap ribs and the three end ribs on 12' diameter tanks. Alternate installation methods, numbers 1 and 2 as shown, are also acceptable.

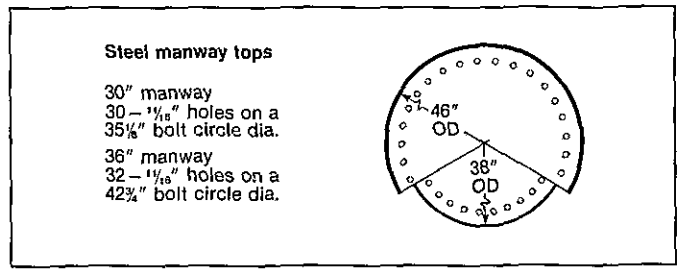

Fiberglas Heavy-duty Flanged Manways

Heavy-duty 22" manways (bearing loads to 2400 lbs.) are available. They can be installed in place of the standard 22" manways previously detailed. All 30" and 36" manways are heavy-duty.

Fiberglas heavy-duty manways must be specified on tanks equipped with helical heating coils, agitators or pumps with a total downward load greater than 1200 lbs., but less than 2400 lbs.

Fiberglas Manway Location

Manway space and location requirements vary with tank and manway diameters. See the following table.

Fiberglas Manway I.D.	*Fiberglas* Tank Diameter	*Fiberglas* Manway Centering	Number Rib Spaces Required
22"	6', 8', 10'	over rib	2
	12'	over rib space	3
30"	6', 8', 10'	over rib space	3
	12'	over rib	4
36"	6', 8', 10'	over rib space	3
	12'	over rib	4

Fiberglas Manway Riser Pipe

The Fiberglas manway riser pipe provides a non-corroding, spacious, economical access from a manhole box and cover, (traffic areas require reinforced concrete road surface) down to the tank manway. Since the bottom is open, the manway riser will fill with water as water surrounds it on the outside.

The manway riser pipe is available in lengths from 30" to 54" in 6" increments, and consists of a 48" diameter tube, open at one end, and a 22½" centered square hole with rounded corners at the other end.

A maximum of two manway risers may be used with tank sizes of 10,000 gallons and larger; only one riser is permitted with tank sizes less than 10,000 gallons due to possible buoyant forces.

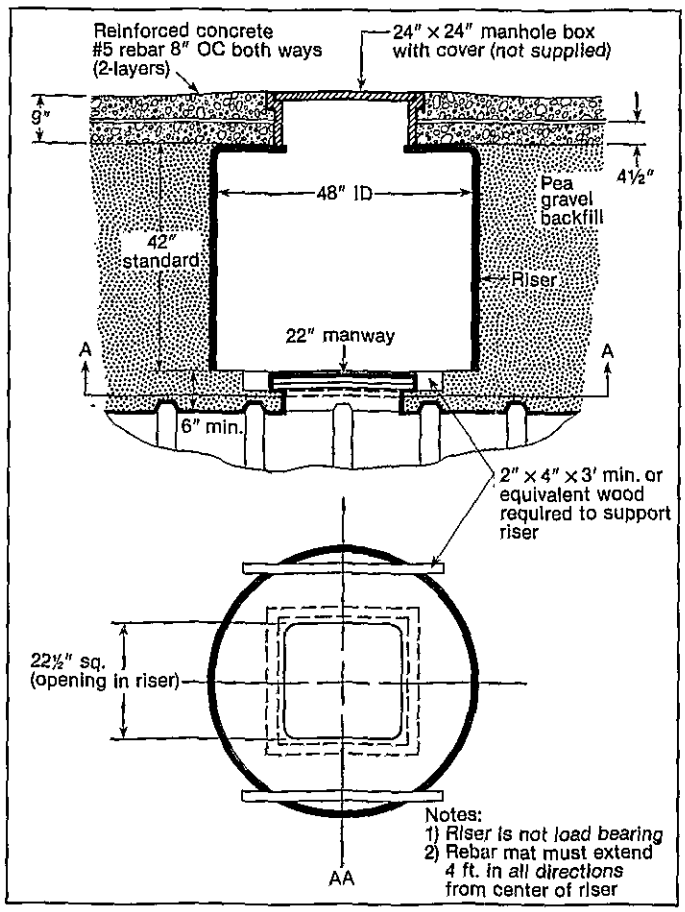

Steel NPT Fittings

Steel NPT fittings are available in 2", 4", 6", and 8" sizes. The 2" size is a full coupling, the 4", 6" and 8" sizes are half couplings. Two 2" fittings or two 4" fittings may be located between the same two ribs perpendicular to the centerline of the tank. All other fittings are located along top centerline of tank. Changes in location off the top centerline of the tank will void the U.L. label.

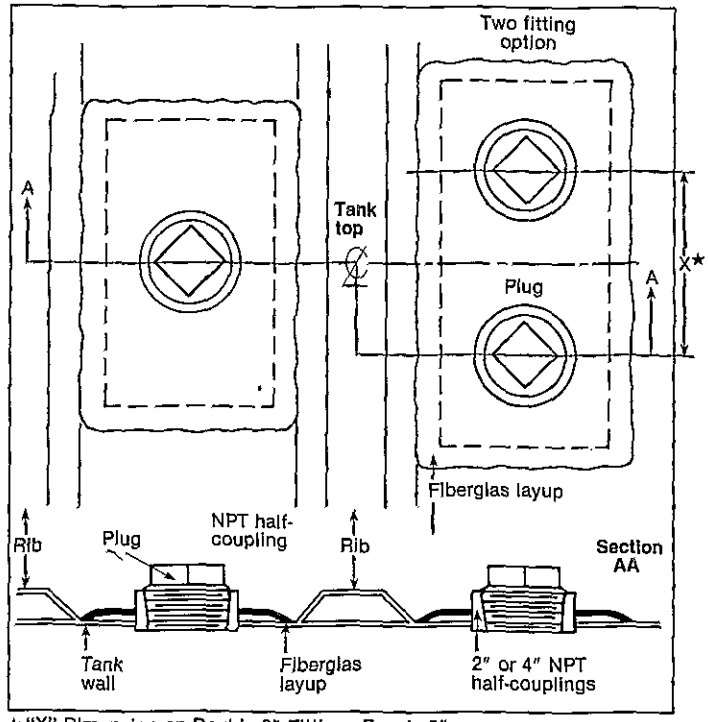

★ "X" Dimension on Double 2" Fittings Equals 5"
"X" Dimension on Double 4" Fittings Equals 9"

Fiberglas Sumps

Fiberglas sumps are available to facilitate condensation removal. The sumps are 4" deep, and must be installed between ribs along centerline of tank bottom and are limited to one sump per tank. Special installation procedures must be followed when installing tanks with sumps.

See the current issue of Owens-Corning's installation instructions (Owens-Corning Fiberglas publication 3-PE-6304).

Sumps are available for all tank sizes and models.

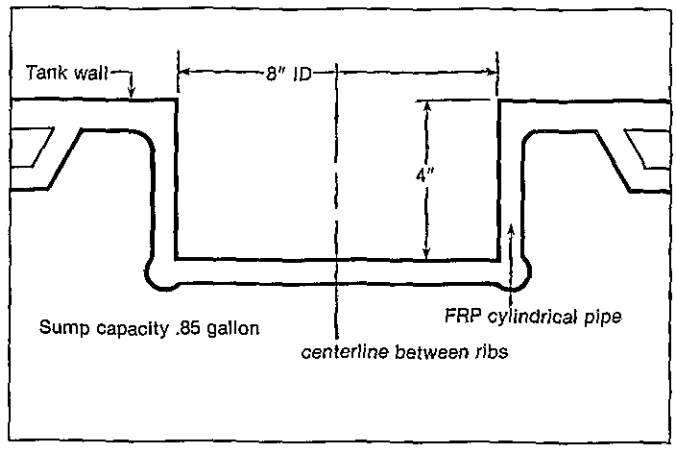

Helical Heating Coils

For viscous products, helical heating coils are available. Attached to a heavy-duty epoxy painted carbon steel 22″ I.D. manway cover, the 1-1/4″ schedule 40 carbon steel heating coil is installed to leave 8″ clearance from the bottom of the tank. Suction and return couplings can be installed in the manway lid. (Not included with heating coil.) Coil area for heat purposes is 20.6 sq. ft. A heating coil can also be centered on 30″ and 36″ manway covers.

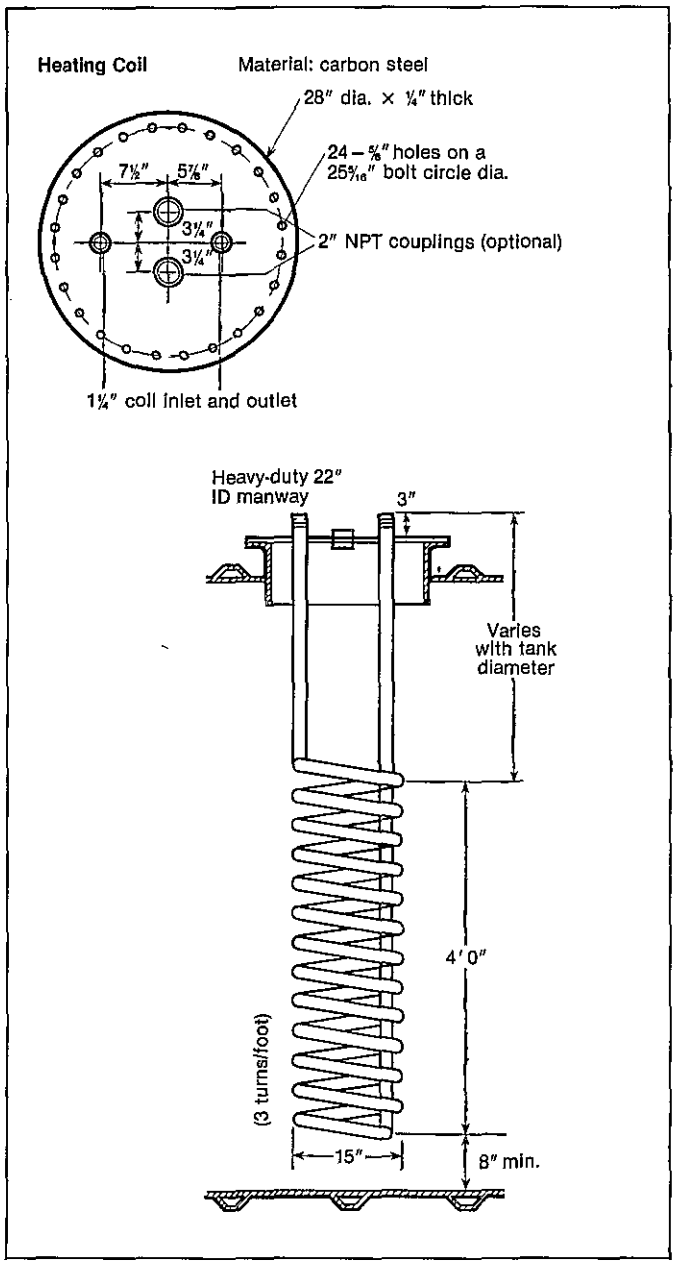

Tank Ladders

Fiberglas tanks are available with a factory installed carbon steel ladder. Attached to the tank bottom with FRP mounting lugs, the ladders are retained at the top with FRP slip lugs on the trunk of the manway to allow for contraction and expansion of metal ladders. (Manway and ladder are sold separately.)

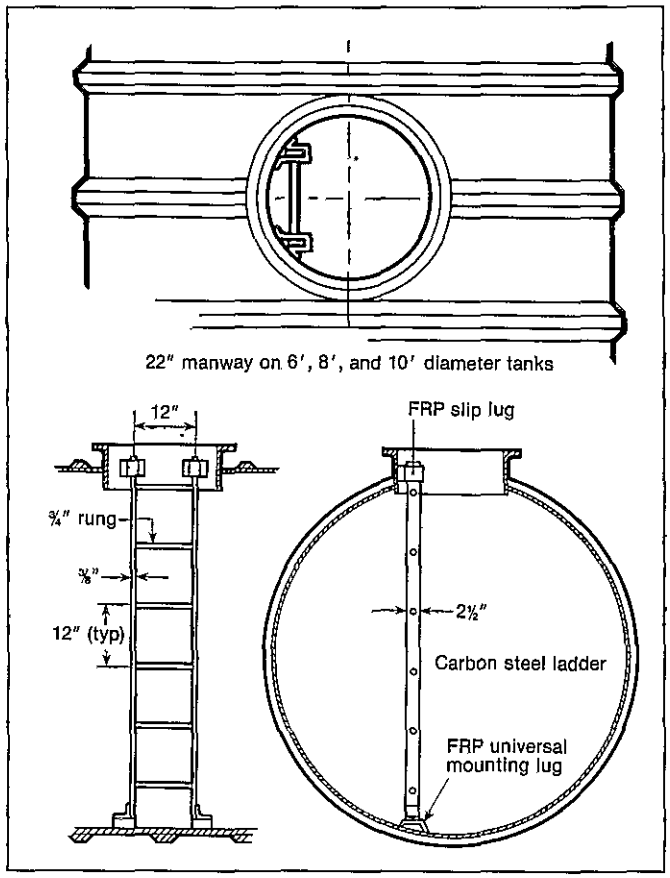

4″ *Fiberglas* Fill Tube

Fiberglas fill tubes screw into the bottom of a 6″ × 4″ double-tapped reducer bushing which is inserted in a standard six inch NPT half coupling. The bottom of the fill tube is located four inches above the bottom of the tank with the end slanted at 45° (unless otherwise specified). The top of the four inch opening is closed with a four inch threaded plug to facilitate shipment and testing.

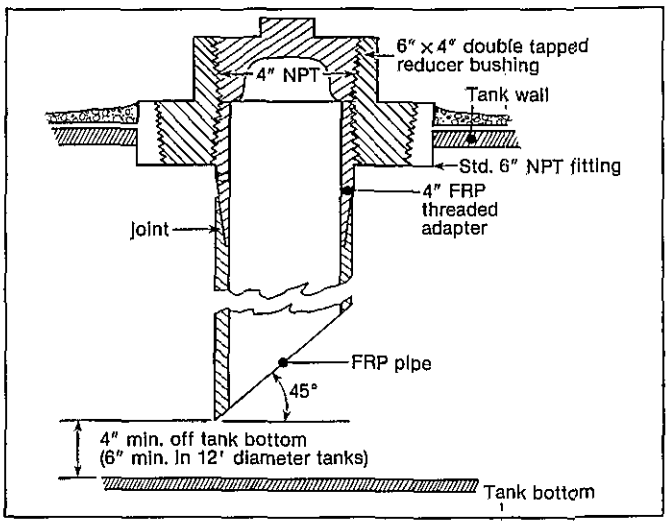

Fill Tube – for 4″ fittings

Fill tubes for 4″ fittings are not supplied by Owens-Corning Fiberglas, but are available from petroleum equipment distributors.

Tube slips inside fill pipe to permit product to be dropped near bottom of tank. Tubes are usually furnished in standard lengths – flared at one end, straight cut at other. The straight end should be cut on a 45° angle and located four inches above the bottom of the tank (six inches in 12′ diameter tanks).

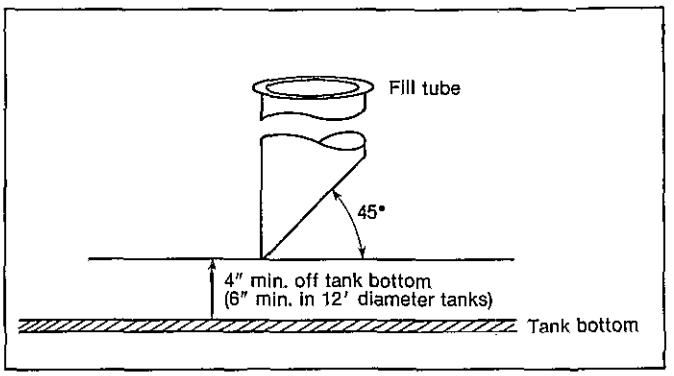

Flanged and Gusseted Nozzle

Fiberglas flanged and conically gusseted nozzles are available in 4″ and 8″ sizes. They are rated at 1500 ft. lbs. for bending loads and 2000 ft. lbs. for torque loading. The nozzles have a standard 150# ANSI flange and require nuts, bolts, washers and full-faced 40-50 durometer gasket material (not shipped as part of flange). Changes in flange location from top centerline of tank will void U.L.-label.

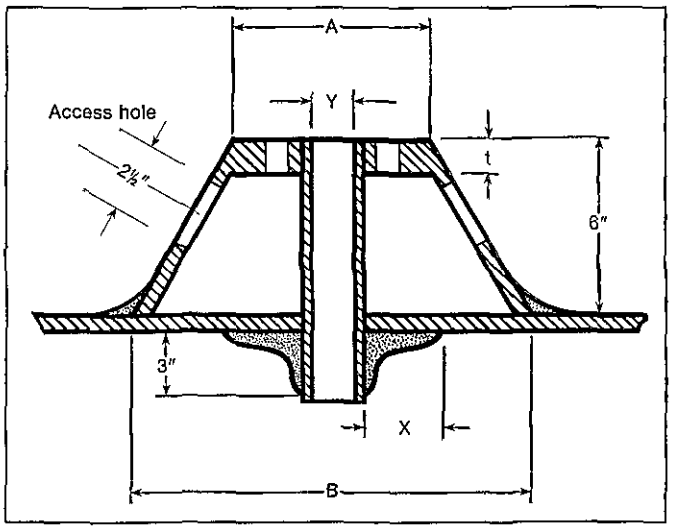

Dimensions

Flange dia.	A	B	X	Y	t
4″	9-3/4″	17″	3″	4″	15/16″
8″	15″	24″	5″	8″	1-1/8″

Hole Lining

Lining a hole with a filter fabric, a geo-textile product, prevents the migration of backfill materials while it allows water to readily pass. Since an underground tank relies on the surrounding backfill for 90% of its structural support, it is imperative to maintain the integrity and stability of the backfill material.

Using a filter fabric is required on the following types of installations: tidal conditions or areas subjected to frequently changing water levels; unstable soils (muck or landfills); water conditions with sandy or silty soil, excessive vibration areas (near trains, heavy traffic, etc.

Polyethelene is not considered an effective material

Consult your Owens-Corning Representative for filter fabric recommendations and use.

Fiberglas Hold-down Straps

Fiberglas hold-down straps are available for all tanks. These straps are pre-shaped to the contour of the tank ribs. The strap length is shown in the following table.

Model	Tank Diameter	Strap Length
D-5	4′	7′ 3-1/2″
D-6	6′	9′ 10″
G-6	8′	14′ 2″
D-3,	10′	18′
D-3, D-6	12′	20′ 4″

Gallon Capacity	Number Straps Required	Gallon Capacity	Number Straps Required
550, 1000	2	25,000	8
2,000, 4,000, 6,000	2	30,000	10
8,000, 10,000	4	40,000	12
12,000, 15,000	4	48,000 (D-6)	15
20,000	6	48,000 (D-3)	16

Guides located on the strap secure strap over rib. Guides located on top of the strap accommodate cables used in deadman-type anchoring procedures. Black arrows on tank wall ► ◄ identify ribs on which hold-down straps must be installed, if required. (See pages 4 through 10 for strap locations.) Do not use straps or cables between ribs on tanks.

The anchor points on a four foot diameter tank should not be less than 5′ apart; on a six foot diameter tank should not be less than 8′ apart; on an eight foot diameter tank not less than 10′ apart; on a ten foot diameter tank not less than 12′ apart; and on a twelve foot diameter tank not less than 14′ apart. Anchor points, turnbuckles and cable clamps are not supplied.

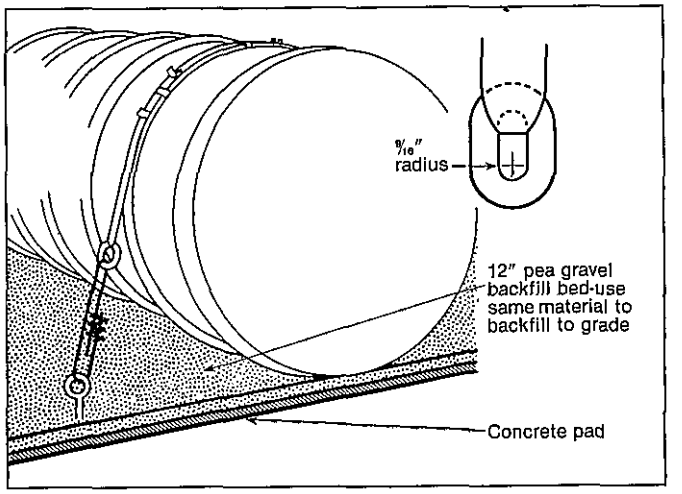

Minimums per anchor location

Tank Diameter	6′ or less	8′ or more
Wire rope (recommended 6 × 19 improved plow steel)		
Diameter	3/8″	1/2″
Turnbuckle diameter		
Hook Type	3/4″	1-1/4″
Jaw or Eye Type	1/2″	3/4″

Installation

FIBERGLAS UNDERGROUND TANKS MUST BE INSTALLED IN ACCORDANCE WITH THE INSTALLATION INSTRUCTIONS (Owens-Corning Fiberglas publication 3-PE-6304). This document should be a part of your tank specifications. Some key installation steps are set forth below. For additional steps, see the installation instructions.

Fiberglas tanks must be pressure tested to 5 psi on tanks of 4′ through 10′ diameters and to 3 psi on tanks of 12′ diameters with fittings soaped, before installation. Pressure testing helps insure that Fiberglas tanks will provide years of dependable performance.

Installation is related to the procedure for steel tanks, following NFPA 30 and 31 practices. The difference is backfill. Owens-Corning requires washed pea gravel type material—a naturally-rounded aggregate 1/4″ nominal size, ranging from 1/8″ to 3/4″ diameter.

If pea gravel is not available in a specific area, washed stone crushings 1/8″-1/2″ diameter, meeting ASTM C-33 may be used with satisfactory results. Other backfill materials must not be used without consulting Owens-Corning Fiberglas.

Tanks must not be installed on timbers, beams or cradles. A minimum 12″ approved backfill bed is required between the tank and hole bottom or concrete pad.

Adequate backfill support is essential to the performance of a Fiberglas tank. Fiberglas underground tanks are designed to derive up to 90% of their support from highly compacted backfill, under certain stress conditions. **Thousands of installations have shown that pea gravel or crushed stone provides the necessary support when pushed under tank ends and sides.**

Correctly installed, Owens-Corning Fiberglas underground tanks mean virtually unlimited service in storing many types of petroleum products. Without corrosion-caused leaks. Without maintenance. And at less cost over the life of your storage system than with steel tanks.

Warranty—Standard Tank for Petroleum Products

We warrant that our underground tanks, if installed underground with proper backfill and otherwise installed in accordance with our instructions:

1. Will meet our published specifications and will be free from material defects in materials and workmanship for a period of one (1) year following date of original delivery by us;
2. Will not fail for a period of thirty (30) years from date of original purchase due to external corrosion; and
3. Will not fail for a period of thirty (30) years from date of original purchase due to internal corrosion, provided the tank is used solely for gasoline, gasohol (90% gasoline and 10% ethanol mixture), av gas, jet fuel, diesel fuel, kerosene or potable water at ambient underground temperatures; or used for fuel oilat temperatures not to exceed 150°F.

Our liability under this warranty shall be limited to, at our option, (i) repair of the defective tank, (ii) delivery of a replacement tank to the point of original delivery, or (iii) refund of the original purchase price, and we shall not be liable for any labor, other installation costs, indirect or consequential damages or other damages in connection with such tanks. **THE FOREGOING CONSTITUTES OUR EXCLUSIVE OBLIGATION AND WE MAKE NO EXPRESS OR IMPLIED WARRANTIES, OR ANY WARRANTY OF MERCHANTABILITY OR FITNESS FOR ANY PARTICULAR PURPOSE WHATSOEVER, EXCEPT AS STATED ABOVE.**

Fiberglas® Tanks for Fuel Storage

Specification

Short Form:

The contractor shall provide *Fiberglas* underground storage tanks U.L.-labeled for petroleum products in sizes and with fittings as shown on the drawings. The tanks shall be manufactured by Owens-Corning Fiberglas.

Tanks shall be tested and installed with pea gravel or approved alternate backfill material according to the current installation instructions (Owens-Corning Fiberglas publication 3-PE-6304) provided with the tank.

Long Form: Section 13177-1
GUIDE SPECIFICATION OWENS-CORNING FIBERGLAS REINFORCED POLYESTER UNDERGROUND STORAGE TANKS

Part I General

1.01 Related Work Specified In Other Sections

A. Cast-in-Place Concrete: Section 03300

B. Anchor Bolts: Section 05501

C. Plastic Pipe: Section 15064

D. Liquid Level Gauges: Section 15174

E. Other Related Work – such as Excavation and Boiler Equipment

1.02 Quality Assurance

A. Acceptable Manufacturers: Owens-Corning Fiberglas Corp. Toledo, Ohio

B. Governing Standards:

1. ASTM Specification D4021-81. Glass Fiber Reinforced Polyester Underground Petroleum Storage Tanks.
2. U.L. 1316. Underwriters Laboratories, Inc., Glass Fiber Reinforced Plastic Underground Storage Tanks for Petroleum Products.
3. National Fire Protection Assoc. (NFPA 30) Flammable and Combustible Liquids Code and (NFPA 31) Standards for Installation of Oil Burning Equipment.
4. Factory Mutual File OFGA8.AF.
5. National Sanitation Foundation Testing Laboratory, January 1984, listing of Plastic Piping System Components And Related Materials, Standard 14.
6. Military Specification MIL-T-52777A, dated July 6, 1978, Tanks, Storage, Underground, Glass Fiber Reinforced Plastic.
7. General Services Administration, Public Building Service Guide Specification, PBS: 1568.
8. Submittals:
   a. Shop Drawings: Contractors shall submit _____ copies of shop drawings for each tank. Drawings shall include all critical dimensions and show locations of all fittings and accessories, i.e., manways, ladders, hold-down straps, heating coils, etc. Materials of construction shall be in accordance with Section 1.02 of this specification.
   b. Catalog Data: Contractor shall submit _____ copies of manufacturer's literature.
   c. Certification Plate: U.L. labels for petroleum products shall be affixed to each tank.
   d. Installation Instructions: Contractors shall submit _____ copies of manufacturer's latest installation instructions.
   e. Calibration Charts: Contractors shall submit _____ copies of manufacturer's latest calibration charts.

1.03 Warranty—Standard Tank for Petroleum Products

A. Tank manufacturer shall furnish a warranty stating as follows:

We warrant that our underground tanks, if installed underground with proper backfill and otherwise installed in accordance with our instructions:

1. Will meet our published specifications and will be free from material defects in materials and workmanship for a period of one (1) year following date of original delivery by us;
2. Will not fail for a period of thirty (30) years from date of original purchase due to external corrosion, and;
3. Will not fail for a period of thirty (30) years from date of original purchase due to internal corrosion, provided the tank is used solely for gasoline, gasohol (90% gasoline and 10% ethanol mixture), av gas, jet fuel, diesel fuel, kerosene or potable water at ambient underground temperatures; or used for fuel oil at temperatures not to exceed 150°F.

Our liability under this warranty shall be limited to, at our option, (i) repair of the defective tank, (ii) delivery of a replacement tank to the point of original delivery, or (iii) refund of the original purchase price, and we shall not be liable for any labor, other installation costs, indirect or consequential damages or other damages in connection with such tanks. **THE FOREGOING CONSTITUTES OUR EXCLUSIVE OBLIGATION AND WE MAKE NO EXPRESS OR IMPLIED WARRANTIES, OR ANY WARRANTY OF MERCHANTABILITY OR FITNESS FOR ANY PARTICULAR PURPOSE WHATSOEVER, EXCEPT AS STATED ABOVE.**

Part II Products

2.01 *Fiberglas* Underground Storage Tanks.

A. Loading Conditions – Tank shall meet the following design criteria:

1. External hydrostatic pressure. Buried in ground with 7′ of overburden over the top of the tank. The hole fully flooded and a safety factor of 2:1 against general buckling.
2. Surface loads: When installed according to manufacturer's installation instructions tanks will withstand surface H-20 axle loads (32,000 lbs./axle).
3. Internal load: Tank shall withstand pressure test of 5 psi on tanks of 4′ through 10′ diameters; 3 psi on 12′ diameter tanks. A 5 to 1 safety factor.
4. Tanks shall be designed to support accessory equipment such as heating coils, ladders, drop tubes, etc. when installed according to manufacturer's recommendations and limitations.

B. Product Storage Requirements:

1. All tanks must be vented. Tanks are designed for operation at atmospheric pressure only, except for use with vapor recovery systems providing the pressure or vacuum does not exceed 1 psi.
2. Tanks shall be capable of storing liquids with specific gravity up to 1.1.
3. Maximum temperature. Tanks shall be capable of storing gasoline, gasohol (90% gasoline and 10% ethanol mixture), AV gas, jet fuel, diesel fuel or potable water at ambient underground temperatures, or fuel oil at temperatures not to exceed 150°F at the tank interior surface.
4. Tanks shall be chemically inert to petroleum products.

C. Dimensional Requirements (refer to Owens-Corning literature on gallonage.)

1. Nominal capacity of the tank shall be_____gallons.
2. Nominal outside diameter of the tanks shall be_____feet.
3. Approximate overall length of the tanks shall be_____feet.

2.02 Accessories

A. Anchor Straps – Provide glass fiber-reinforced plastic anchor straps for each tank shown. Number and location of straps shall be as specified by manufacturer. Each strap shall be capable of withstanding the bouyancy load for tank diameter as shown.

4'ϕ – 4,200 lbs.	8'ϕ – 25,000 lbs.	12'ϕ – 26,000 lbs.
6'ϕ – 18,000 lbs.	10'ϕ – 32,000 lbs	

Straps shall be standard as supplied by the tank manufacturer.

B. Certification Plate – Underwriters' Laboratory label shall be permanently affixed to each tank.

C. Flanged Manways

1. The standard manways to be 22" I.D. the 30" and 36" I.D. manways to be installed in 6', 8', 10' and 12' diameter tanks only.
2. All manways will be furnished complete with U.L. approved gaskets, bolts and covers.
3. Location – refer to drawings for location.
4. Manway risers 48" in diameter and 42" high will be supplied to provide access to the manway lid. A 24" × 24" galvanized street box with a cover must be provided by contractor for at grade installation.
5. Fiber glass manway extension tubes 24" long will be provided for the manways as outlined in section 3 above.

D. Fill Tubes

1. Tubes shall be fiber glass-reinforced plastic.
2. Tubes shall be factory installed, 4" diameter, and shall include a 6" steel fitting with a double tapped reducer bushing to 4" diameter.
3. Tubes shall be standard items as manufactured and installed by the tank manufacturer.
4. FRP fill tubes supplied by Owens-Corning. Other fill tubes of appropriate design can be supplied by contractor.
5. Location – refer to drawings for location.

E. Heating Coils/Hotwells

1. Heating Coils – shall be standard item as manufactured and/or supplied by the tank manufacturer including 22" manway.
2. Location – refer to drawings for location.

F. Fittings-Threaded – NPT

1. All threaded fittings on U.L.-labeled tanks for storage of petroleum products shall be of a material of construction consistent with the requirements of the U.L.-label. All fittings to be supplied with threaded plugs.
2. All standard threaded fittings are 4" in diameter and shall be half couplings. Reducers are to be used for smaller sizes where specified and provided by contractor.
3. Thread Standards – All threaded fittings shall have machine tolerances in accordance with the ANSI standard for each fitting size.
4. Strength – NPT fittings will withstand a minimum of 150 foot-pounds of torque and 1,000 foot-pounds of bending, both with 2:1 factor of safety.
5.

Sizes	Standard	Other Sizes
Inlet	4"	_____
Outlet	4"	_____
Vent	4"	_____
Gauge	4"	_____
Fill	4"	_____

6. Location – refer to drawings for location.
7. Suction Line – Shall be installed on site by the contractor. Diameter of pipe and grade and schedule as called out in other sections.
8. Return Line – Shall be installed on the site by the contractor. Diameter of pipe and grade and schedule as called out in other sections.
9. All rigid piping shall be terminated 4" from the bottoms of four, six, eight and ten foot diameter tanks, and a minimum of 6" from the bottoms of twelve foot diameter tanks.

G. Ladders – Shall be standard carbon steel supplied by the tank manufacturer. Refer to drawings for location.

H. Lifting Lugs – Provide lifting lug(s) on all tanks. Lugs shall be capable of withstanding weight of tank with a safety factor of 3 to 1.

Part III Execution

3.01, 3.02 Installation and testing

Tanks shall be tested and installed according to the current installation instructions provided with the tank (refer to Owens-Corning Fiberglas publication 3-PE-6304 and include as part of your specification).

Call today for additional information or help with your specifications

Atlanta, Georgia 30328
1155 Hammond Drive
Building C, Suite 3210
(404) 956-1465

Cleveland, Ohio 44129
5700 Pearl Rd., Suite 104
(216) 884-9440

Dallas, Texas 75230
12880 Hillcrest, Suite 100
(214) 233-9241

Greenbelt, Maryland 20770
9111 Edmonston Rd., Suite 401
(301) 345-7300

Houston, Texas 77060
256 North Belt East, Suite 100
(713) 445-6100

Los Angeles, California 90040
5933 Telegraph Road
(213) 724-5383

Ft. Lauderdale, Florida 33068
541 South 441, Suite 3
(305) 975-6700

New York, New York 10022
717 Fifth Avenue
(212) 759-3810

Northbrook, Illinois 60062
2215 Sanders Road
(312) 480-4300

Overland Park, Kansas 66210
55 Corporate Woods, Suite 200
9300 W. 110th Street
(913) 341-9100

Scarsdale, New York 10583
700 White Plains Road
(914) 472-3900

South San Francisco, California 94080
477 Forbes Blvd.
(415) 873-7950

Tampa, Florida 33609
4950 W. Kennedy Blvd., Suite 301
(813) 877-7516

Toledo, Ohio 43659
Fiberglas Tower OB/7
(419) 248-7000

Braintree, Massachusetts 02184
25 Braintree Hill Park, Suite 305
(617) 849-1340

OWENS-CORNING FIBERGLAS CORPORATION
Non-Corrosive Products Division
Fiberglas Tower, Toledo, Ohio 43659

Pub. No. 3-PE-6312-Q Litho U.S.A., April, 1984

Copyright © 1984 Owens-Corning Fiberglas Corporation

Cathodic Protection of Underground Petroleum Storage Tanks and Piping Systems

PUBLICATION 1632
FIRST EDITION 1983

American Petroleum Institute
1220 L Street, Northwest
Washington, D.C. 20005

Cathodic Protection of Underground Petroleum Storage Tanks and Piping Systems

PUBLICATION 1632
FIRST EDITION 1983

OFFICIAL PUBLICATION

REG. U.S. PATENT OFFICE

TABLE OF CONTENTS

		Page
I.	Foreword	1
II.	Scope	1
III.	Introduction	1
IV.	Sacrificial Anode Protection	7
V.	Impressed Current Protection	9

Cathodic Protection of Underground Petroleum Storage Tanks and Piping Systems

I. Foreword

Persons planning to construct an underground storage facility, replace existing underground storage tanks and piping system, or cathodically protect existing underground storage tanks and piping should refer to applicable local, state and federal fire, safety and environmental regulations as well as the following publications and material:

- API 1615, *Installation of Underground Petroleum Storage Systems*
- API 1621, *Recommended Practice for Bulk Liquid Stock Control at Retail Outlets*
- NFPA 30, *Flammable and Combustible Liquids Code*
- NACE RP-01-69, *Control of External Corrosion on Underground or Submerged Metallic Piping Systems*
- *National Electrical Code*

The information in this bulletin may be used by anyone desiring to do so, but the American Petroleum Institute shall not be held responsible or liable in any way, either for any loss or damage resulting therefrom, or for the violation of any federal, state or municipal regulations with which it may conflict.

II. Scope

This bulletin covers two methods for providing cathodic protection to buried steel petroleum storage and dispensing systems. Its intent is to provide information specific to steel structures buried at service stations such as motor fuel storage tanks and delivery piping, waste oil tanks, heating oil tanks, and automobile lifts. Information presented for service stations is not necessarily applicable to buried tanks and piping used for other purposes. This bulletin is meant to serve only as a general guide to marketers, architects and engineers interested in cathodic protection of underground petroleum storage and dispensing systems. Specific cathodic protection designs are not given. Such designs should be developed or reviewed by a qualified corrosion engineer or a person thoroughly familiar with cathodic protection practices.

III. INTRODUCTION

Corrosion may be defined as the deterioration of metal due to a reaction with its environment. External corrosion of buried steel structures is an electrochemical process. For the process to occur, areas with different electrical potentials must exist on the metal surface. These areas must be electrically connected and they must also be in contact with an electrolyte. There are, therefore, four components in each electrochemical corrosion cell: an anode, a cathode, a metallic path connecting the anode and cathode, and an electrolyte (See Figure 1).

- At the anode the base metal goes into solution (corrodes) by releasing electrons and forming positive metal ions.
- No metal loss occurs at the cathode. However, other chemical reactions occur which consume the electrons released at the anode.
- The metal path connecting the anode and cathode conducts electrons generated by the chemical corrosion reactions at the anode to the cathode where they are consumed.
- Positive current flows through the electrolyte from the anode to the cathode to complete the electrical circuit. In the case of buried structures the electrolyte is moist soil.

Corrosion is usually not limited to a single point as shown in Figure 1. In the case of general corrosion, thousands of tiny micro corrosion cells may occur randomly over the metal surface resulting in relatively uniform metal loss. In pitting attack the individual corrosion cells tend to be larger, and distinct anode and cathode areas can often be identified. Metal loss may be concentrated within relatively small areas and substantial areas of the surface may be unaffected by corrosion.

Both metal composition and environmental factors may determine which areas on a metal surface become anodes or cathodes. Steel is an inherently nonhomogeneous material and for a particular environment, potential differences between adjacent areas can result from uneven distribution of alloying elements or contaminants within the metal structure. Differences in weld material and the steel plate can also cause corrosion cells.

Physical and chemical properties of the soil electrolyte may also influence the location of anodic and cathodic areas on the metal surface. For example, differing oxygen concentrations at different areas on a buried steel structure may generate potential differences. Areas with low oxygen levels become anodic areas and areas with higher oxygen concentrations become cathodic areas. This may result in more severe corrosion attack at the bottom of a buried tank than at the top of the tank since oxygen concentration in soil is primarily dependent on diffusion processes (See Figure 2). The same mechanism can also contribute to corrosion in areas where clay or debris contact a steel tank buried in a

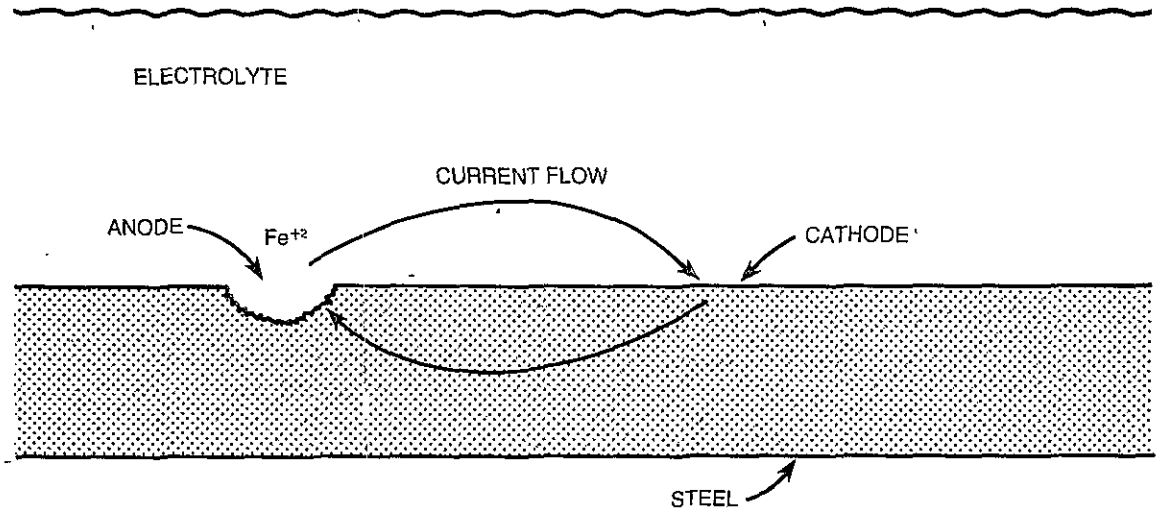

FIGURE 1. ELECTROCHEMICAL CORROSION CELL

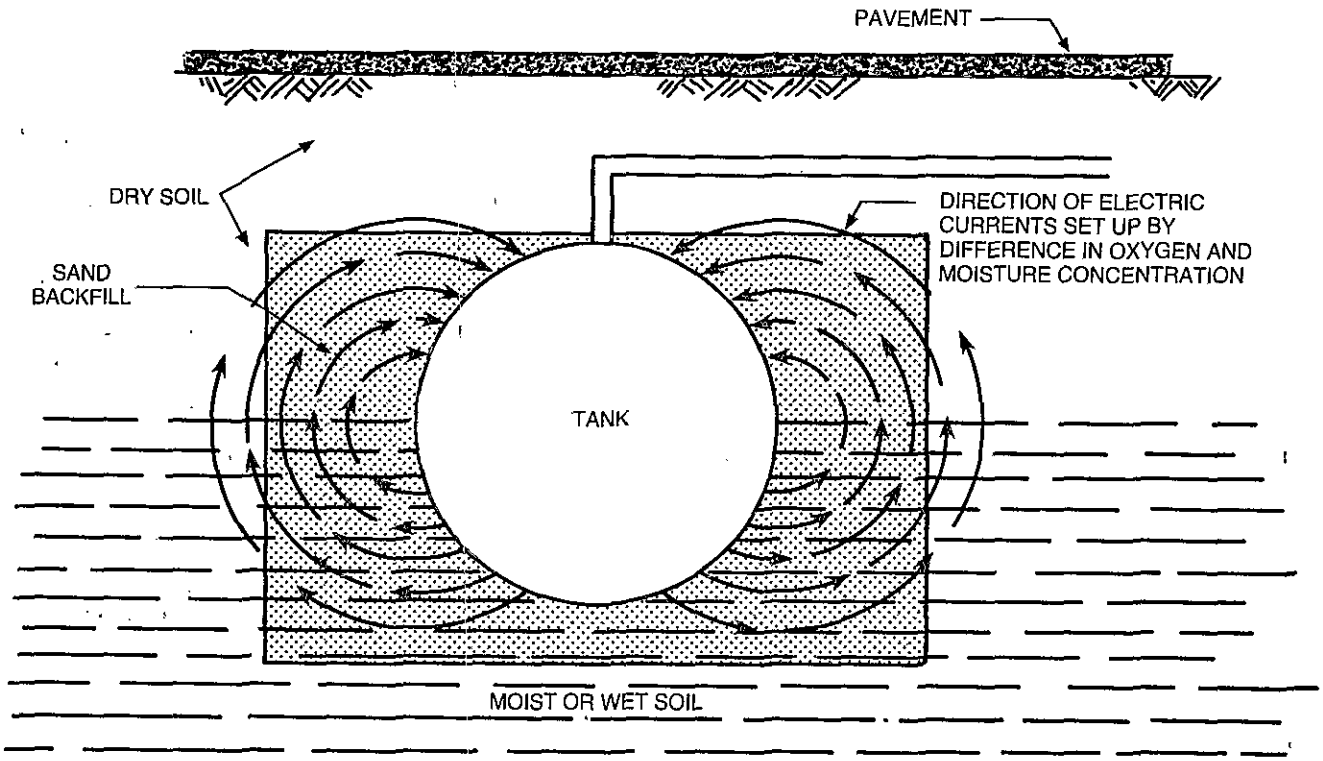

FIGURE 2. CORROSION CAUSED BY DIFFERENCES IN OXYGEN AND MOISTURE CONTENT OF SOILS

sand backfill or where a tank is buried in two different types of soil (See Figure 3).

Soil characteristics substantially affect the type and rate of corrosion occurring on buried structures. For example, dissolved salts influence the current carrying capacity of the soil electrolyte and help determine reaction rates at anode and cathode areas. Soil moisture content, pH (measure of acidity), and the presence of sulfides also influence corrosion. These factors, and perhaps others, interact in a complex fashion to influence corrosion at each location.

Corrosion processes described above are often referred to as galvanic corrosion. In addition to galvanic corrosion stray current and bimetallic corrosion may also be encountered on buried steel structures. Like galvanic corrosion, these corrosion processes also involve electrochemical reactions.

- Stray currents are electric currents which travel through the soil electrolyte. Direct current (DC) stray currents are the most common and potentially the most damaging. These currents are generated from grounded DC electric power operations including electric railroads, subways, welding machines and cathodic protection systems. Stray currents may enter a buried metal structure and travel through the low resistance path of the metal to an area on the structure closer to the current source. Current leaves the structure at this point to return to the source through the soil electrolyte. Corrosion occurs at the area where current leaves the structure (See Figure 4).
- Bimetallic corrosion occurs when two metals with different compositions are connected in a soil electrolyte. For example, bimetallic corrosion can occur where a bronze check valve is joined to steel piping or where galvanized pipe is connected to a steel tank. In the bronze check valve/steel pipe example, the steel pipe becomes the anode and the bronze check valve is the

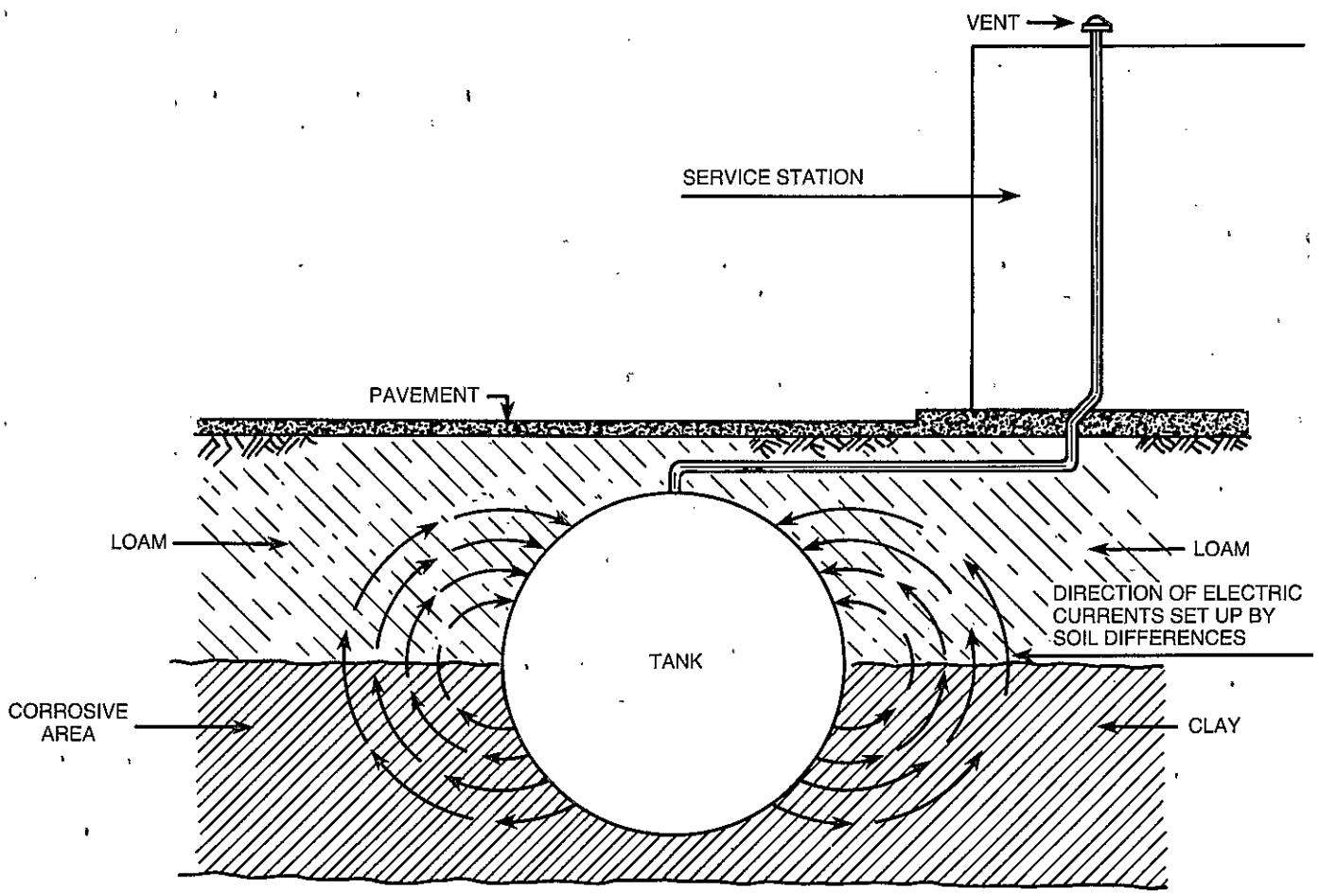

FIGURE 3. CORROSION CAUSED BY DISSIMILAR SOILS

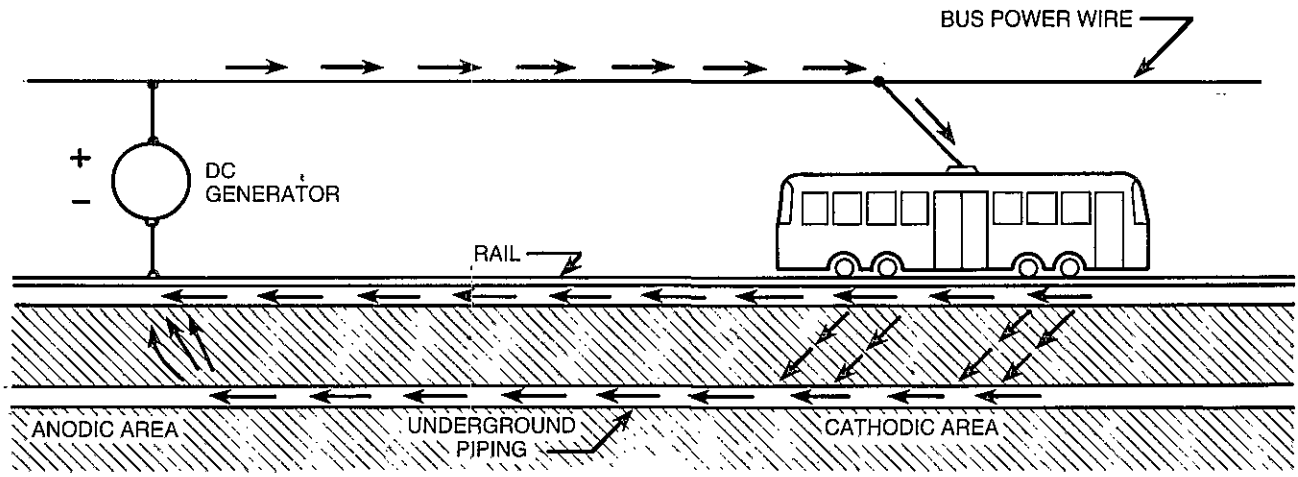

FIGURE 4. STRAY CURRENT CORROSION

cathode. Since current takes the path of least resistance, the most severe corrosion attack on the steel pipe occurs in the area immediately adjacent to the check valve (See Figure 5).

Corrosion of buried steel structures may be eliminated by proper application of cathodic protection. Cathodic protection is a technique for preventing corrosion by making the entire surface of the metal to be protected a cathode of an electrochemical cell. Corrosion is not eliminated. It is simply transferred from the metal surface to an external anode.

There are two methods of applying cathodic protection to underground metal structures:

- Sacrificial or galvanic anodes
- Impressed current

For sacrificial or galvanic anode systems, a metal anode more negative than steel in the galvanic series (see Table 1 for a partial galvanic series) is electrically connected to the structure to be protected and buried in the soil. A galvanic corrosion cell develops and the active metal anode corrodes (is sacrificed) while the structure becomes cathodic and is protected. As the protective current enters the structure it opposes, overcomes, and prevents the flow of any corrosion current from the metal structure. The protective current then returns to the sacrificial anode through a metallic conductor (See Figure 6).

Advantages of sacrificial anode cathodic protection systems include:

- No external power supply is necessary
- Installation is relatively easy
- Costs are low for low current requirement situations

Table I
PRACTICAL GALVANIC SERIES
(Neutral Soils and Water)

METAL	VOLTS (REFERENCED TO COPPER/COPPER SULFATE)
Commercially pure Magnesium	−1.75
Magnesium Alloy (6%Al, 3%Zn, 0.15%Mn)	−1.6
Zinc	−1.1
Aluminum Alloy (5%Zn)	−1.0
Commercially pure Aluminum	−0.8
Mild Steel (Clean and Shiny)	−0.5 to −0.8
Mild Steel (Rusted)	−0.2 to −0.5
Cast Iron	−0.5
Lead	−0.5
Mild Steel in Concrete	−0.2
Copper, Brass, Bronze	−0.2
High Silicon Cast Iron	−0.2
Mill Scale on Steel	−0.2
Carbon, Graphite, Coke	+0.3

- Maintenance costs are minimal after installation
- Interference problems (stray currents) on foreign structures are rare
- Sacrificial anodes may be attached directly to new, coated tanks by tank manufacturers

Disadvantages of sacrificial anode cathodic protection systems are:

- Limited driving potential
- Low current output, preventing protection of other structures
- Subject to soil resistivity limitations

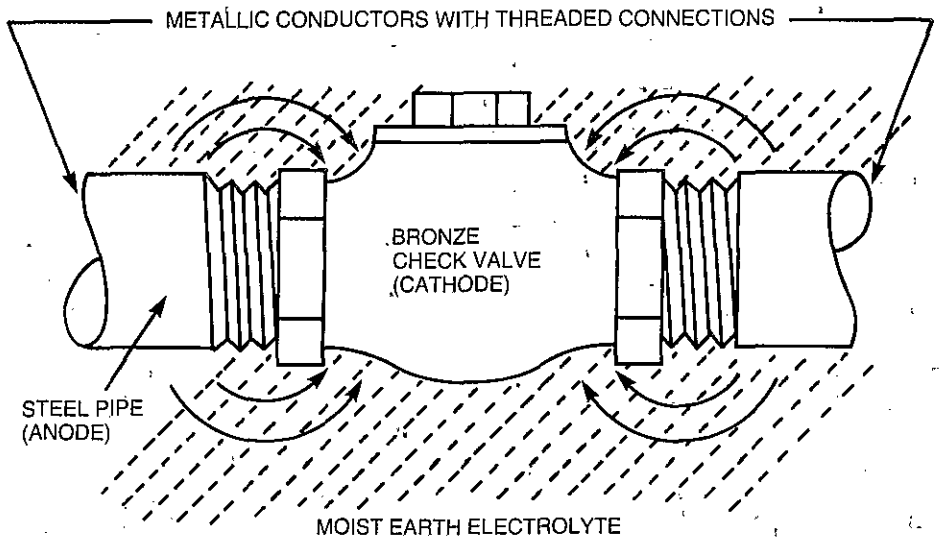

FIGURE 5. BIMETALLIC CORROSION

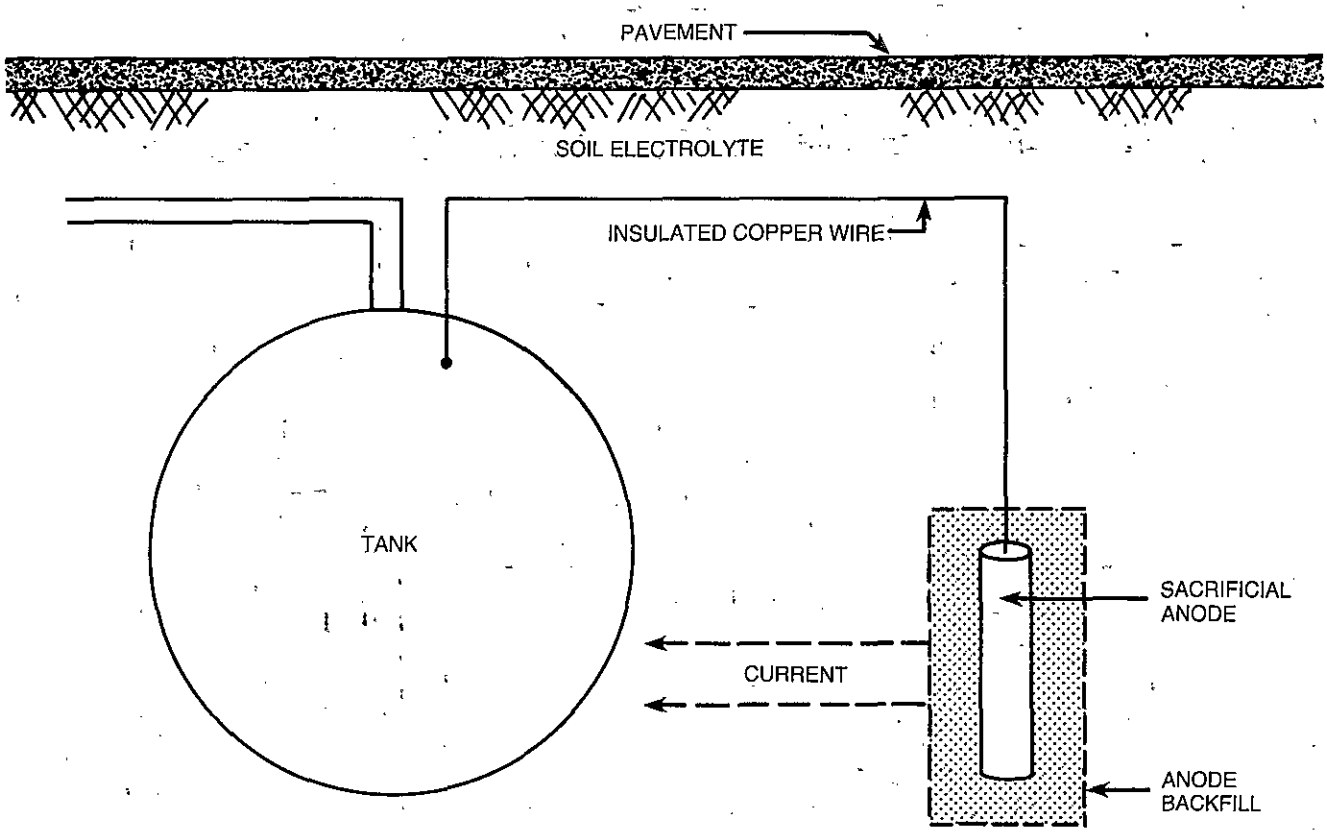

FIGURE 6. SACRIFICIAL ANODE CATHODIC PROTECTION

- Not applicable for protecting large bare steel structures
- Possibility of a short life

The second method of applying cathodic protection to a buried metal structure is to use impressed current from an external source. Figure 6 illustrates a typical installation of this type using an AC power supply with a rectifier. The DC current from the rectifier flows through the soil to the structure from a buried electrode. In this case there is no need for the anode itself to corrode to provide current to the structure, so impressed current anodes are typically made of relatively inert materials.

Advantages of impressed current cathodic protection systems are:

- Large driving potential
- High current output capable of protecting other underground steel structures with a low operating cost
- Possibility of flexible current output control
- Applicability to almost any soil resistivity
- Capable of protecting large bare steel structures

Impressed current cathodic protection systems have the following disadvantages:

- May cause interference problems (stray currents) on foreign structures
- Possible to deliberately or unintentionally switch off current and eliminate protection
- Systems must be monitored and maintained on a regular schedule

As indicated by the advantages and disadvantages of sacrificial and impressed current systems listed above, the type of system selected for a particular location may depend upon a number of factors. In general, systems and designs selected should provide corrosion protection while optimizing installation, maintenance and operation costs. New, coated

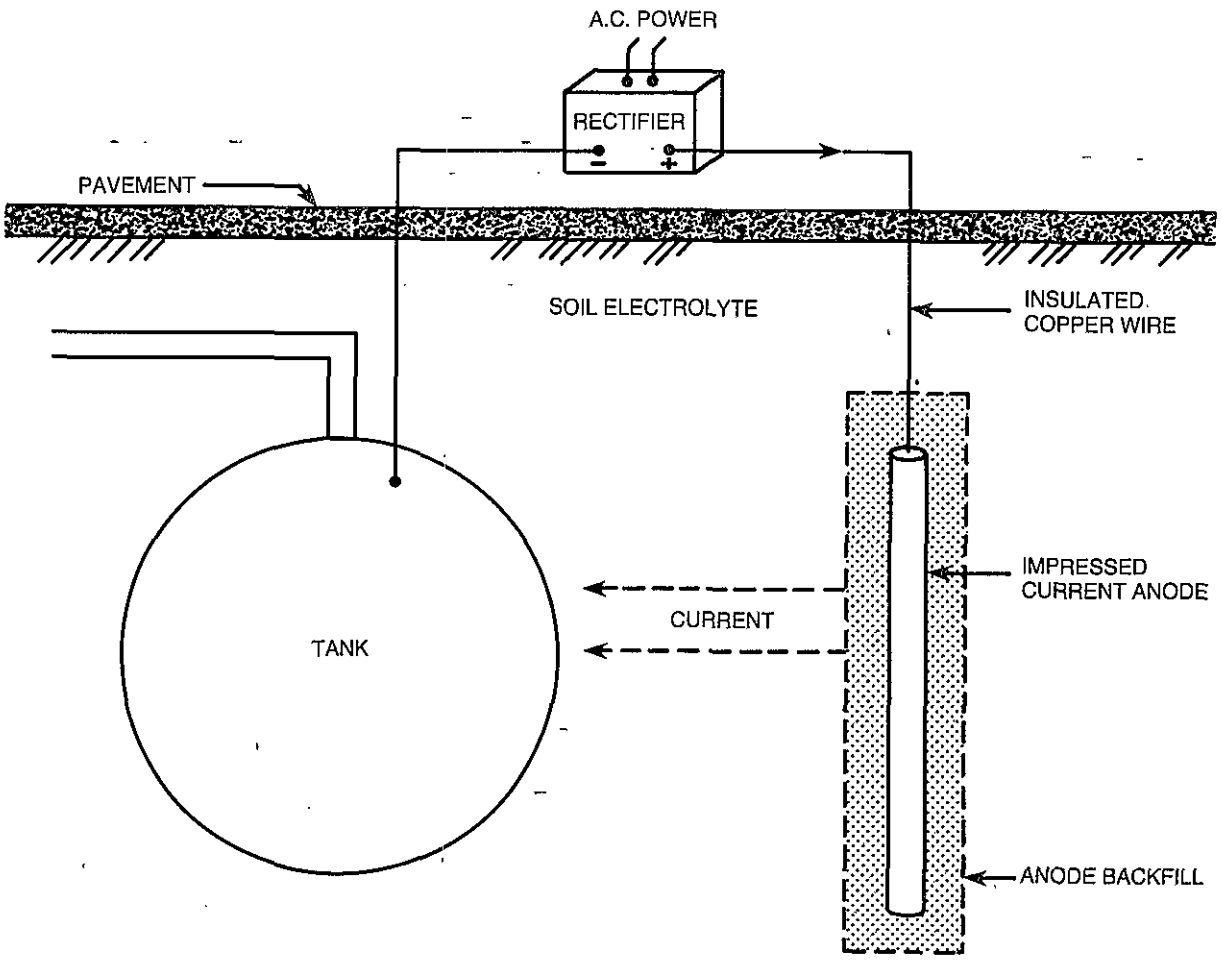

FIGURE 7. IMPRESSED CURRENT CATHODIC PROTECTION

tanks and piping may be protected by either system, whereas existing installations will normally require impressed current systems. Since complete corrosion protection of buried structures under cathodic protection depends upon proper system design, it is recommended that cathodic protection systems should be designed by qualified corrosion engineers or other persons thoroughly familiar with cathodic protection.

Consideration should be given to the following factors in developing cathodic protection designs for buried structures:

- Soil resistivity
- Present and future current requirements
- Life of the cathodic protection system in relation to the intended life of the structures to be protected
- Presence of stray currents
- Anode placement to provide uniform protective current
- Condition of the structures to be protected: Are they new or old, coated or bare
- Selection of a system to minimize excessive current output which can harm structure coatings or produce interferences with nearby buried structures
- Reliability of cathodic protection system components

In some instances on-site surveys may be required to obtain information necessary for specific designs. In other cases designs may be sufficiently versatile to cover the wide range of conditions normally encountered.

The installation of cathodic protection systems involves the use of wire conductors connecting anodes and structures, anodes and test stations, and anodes and rectifiers. The exact location of such wiring and anodes should be carefully identified on a plot plan of the facility, and a copy of this plan should be maintained by the owner.

IV. Sacrificial Anode Protection

Corrosion protection with sacrificial anodes may be used in preference to an impressed current system where current requirements are low. Magnesium anodes are most commonly used although zinc anodes may be employed to advantage in low resistivity soils. Low driving voltages and low current out-puts (usually less than 0.10 ampheres per anode) generally limit sacrificial anodes to cathodic protection of well coated structures. New installations involving coated tanks and/or distribution piping are particularly amenable to sacrificial anodes for providing corrosion protection.

Underground storage tanks are available from tank manufacturers with sacrificial anode cathodic protection systems already attached. Current requirements are minimized by plant application of long-lasting corrosion resistant coatings. Sacrificial anodes are attached at the plant with anode weight and size determined by the tank size. Non-conductive bushings and flanges are provided with each tank to insulate the tank from any extra current demand from associated metal piping. These bushings and flanges must be used to protect the tank and maintain the supplier's warranty. These tanks may also be obtained with plant installed test leads which facilitate field monitoring of anode current output and tank to soil potential.

These pre-engineered cathodic protection systems for new tanks were developed to satisfy requirements for most soil situations. In some instances, such as locations with low soil resistivity, the life of these systems may not be as long as expected. Conditions under which long term corrosion protection is afforded should be determined by purchasers and compared with conditions present at proposed installation sites.

Tanks with pre-engineered cathodic protection systems must be given careful handling during transportation and installation to protect against coating damage or rupture of anode packages. Anode wires, test leads, tank coating and tank isolation bushings should be inspected for obvious damage prior to final installation. As with any cathodic protection system, a regular monitoring program after installation is necessary to determine that corrosion protection is being maintained.

Field installed sacrificial anode cathodic protection systems may also be used to protect new or existing well-coated tanks and piping. In general, a coal tar coating routinely applied to steel petroleum storage tanks should not be considered to be an adequate coating for cathodic protection purposes. Many of the corrosion resistant coatings used on cathodically protected petroleum pipelines (see NACE RP-01-69) are applicable as coatings for buried petroleum storage tanks and dispensing piping. Effective coatings are needed to reduce current requirements of these structures to levels which can be supplied over a long term by sacrificial anodes.

With information on soil resistivity, total surface area to be protected and coating quality, current requirements for new or existing buried structures may be estimated. For existing structures, it is also possible to quantitatively determine current requirements by electrically connecting buried structures to a variable DC power source and measuring structure to soil potentials vs a copper-copper sulfate electrode. The observed current output needed to achieve a desired cathodic protection criteria may then be used for designing a cathodic protection system for the structures.

Three sacrificial anode materials are commonly used for soil installations:

- high potential magnesium alloy
- standard magnesium alloy
- zinc

Magnesium and zinc anodes prepackaged in chemical backfill are readily available in a number of size and weight

configurations to provide current output and anode life design flexibility. The use of a chemical backfill with anodes is necessary for reliable operation in soil environments. Chemical backfill promotes anode efficiency, lengthens anode life and keeps anodes moist.

The number of anodes required for providing cathodic protection to buried structures depends largely upon total current requirements, but current distribution factors should also be considered. Where several anodes are needed for a structure, better current distribution (more uniform polarization) may be achieved by distributing the anodes uniformly around the structure. In the case of new tank installations, sacrificial anodes are often placed parallel to the tank walls, at or near the level of the tank bottom. For petroleum distribution systems, anodes are typically installed below the piping at a depth of about five feet. Installation of anodes at these locations for tanks and piping serves two purposes:

- it helps assure anodes remain in a moist environment and
- it provides better current distribution to the lower portion of the buried structures where corrosion is typically most severe.

A low resistance electrical connection must be made between the structure to be protected and the sacrificial anodes lead wire. For new installations and where safety considerations permit, powder weld connections; (e.g. Cadweld or Thermit type) should be used. In some situations, safety factors may dictate the use of mechanical connections. Such connections should be carefully made since poor electrical contact will increase the effective circuit wire resistance and limit the amount of useful current available from the anode. All exposed metal at structure-lead wire connections should be waterproofed and coated with electrical insulating material. This will prevent bimetallic corrosion between the copper wire and the steel tank if the sacrificial anode should fail at some time in the future.

Current output of sacrificial anodes is limited and cathodic protection designs typically do not provide sufficient current for protecting adjacent buried structures. For this reason, the structure to be protected should be electrically insulated from other buried metal structures including electrical conduit. Properly installed insulating unions and bushings are effective for accomplishing electrical isolation. Location of these insulating fittings will depend upon the cathodic protection design and the extent of the structure to be cathodically protected. These insulating fittings should be inspected after installation to insure no damage has occurred.

Where electrical isolation is essential for adequate corrosion protection, particular care should be taken to assure that the structure to be protected is insulated from any buried metallic powder conduit. For example, petroleum distribution piping protected by sacrificial anodes should have an insulating union at each dispensing unit, and protected underground storage tanks with submersible pumps should include insulating bushings between the pump riser pipe and the tank.

There are several criteria for determining if adequate cathodic protection has been achieved on buried structures. The most common criterion for underground petroleum storage tanks and piping systems with sacrificial anode protection is a negative voltage of at least 0.85 volts. This potential is measured between the structure and a saturated copper-copper sulfate reference electrode contacting the soil electrolyte and with sacrificial anodes attached.

Routine structure to soil potential measurements for evaluating the extent of corrosion protection are often difficult to obtain at petroleum storage and distribution sites because the buried structures are covered by asphalt or concrete pavement. While valid potential measurements are possible through asphalt or concrete, special equipment and trained personnel may be required to obtain and interpret these results. More reliable results can be obtained by installing permanent access manholes through the pavement to the soil at the time cathodic protection is installed. The number and location of soil access manholes will depend upon the cathodic protection design and placement of sacrificial anodes. In general, the access manholes should be placed to measure potentials over the structure at points farthest from the sacrificial anodes or in shielded areas.

As an alternative to making structure to soil potential measurements as described above, long-life reference cells should be permanently installed in the soil near protected structures. Specially designed copper-copper sulfate or packaged zinc reference cells are commercially available for this purpose. These reference cells are typically located within several inches of the structure in areas where current distribution may be poor, at points farthest from attached anodes, or under the tank. Acceptable potential readings at such locations, according to the criterion above, are a good indication that adequate corrosion protection has been achieved on the entire external structure surface.

Lead wires attached to the buried reference cells should be run to a permanent test station at the site to allow easy attachment to test instruments. It may also be convenient or necessary to attach a test lead to the buried structure and run it to the test station to facilitate periodic potential monitoring.

Structure to soil potential measurements are made by electrically connecting the buried structure to the negative terminal of a suitable high resistance voltmeter (e.g. 50,000 ohm internal resistance or higher). The positive terminal of the voltmeter is connected to a properly placed reference cell. When a buried zinc reference cell is used, a negative

1.1 volts must be added to the observed voltmeter reading to obtain a potential reading comparable to that which would result from using a copper-copper sulfate reference cell.

Where sacrificial anodes have been installed, their proper operation should be confirmed by a qualified person within six and twelve months of installation, and one year thereafter. If these tests confirm proper operation, subsequent inspection intervals can be extended to five years. However, if underground work is performed at the protected site, cathodic protection should be remonitored six to twelve weeks after work completion and one year thereafter before again extending the inspection interval. Procedures used and data obtained should be clearly recorded and included in permanent cathodic protection records for the location along with the name of the person making the measurements and the date measurements were made.

V. Impressed Current Protection

Impressed current cathodic protection is often the most economical means of controlling corrosion of existing buried steel petroleum storage tanks and distribution piping systems. It may also be used to provide corrosion protection for other buried structures at a location such as waste oil tanks, heating oil tanks and automobile lifts—often at minimal additional costs.

As indicated previously, cathodic protection requires a source of direct current. For impressed current systems, this direct current is typically provided by a rectifier attached to a conventional AC power source. (A rectifier is a device for converting alternating current to direct current). DC output from the rectifier flows to the buried impressed current anode, through the soil electrolyte and onto the surface of the structure as shown in Figure 6.

The usual cathodic protection rectifier has two major components; a step-down transformer to reduce the AC supply voltage and rectifying elements to provide DC output. Units may be obtained with either selenium or silicon rectifier elements. Both types of elements are widely used and provide dependable service. Either may show cost or performance advantages for a particular application. Small selenium units are often less expensive than similar silicon units but silicon rectifiers are generally more efficient. Silicon units are particularly susceptible to damage from power surges and protective devices should be included in these units to prevent lightning damage. Selenium rectifiers are not recommended if ambient temperatures are expected to exceed 130°F (55°C).

The rectifier output capacity selected will depend upon estimated or measured current requirements of the structure to be protected and upon the voltage needed to cause current to flow from the anodes to the buried structure. In general, moderate excess capacity should be allowed for all rectifiers to provide for adjustment flexibility during the life of the cathodic protection system and to prevent voltage overloads. All rectifiers may be damaged by voltage overloads. Excess rectifier voltage outputs of from 15% to 30% above expected needs are suggested to compensate for possible line voltage fluctuations. Some excess rectifier current output capacity is particularly suggested for coated structures. Coatings may degrade with time and increase current requirements of a structure.

Careful consideration should be given to locating rectifiers. Efforts should be made to place the units in areas not susceptible to accidental or malicious damage, since no corrosion protection is provided by an impressed current system if the rectifier is inoperative. Whenever possible rectifiers should be mounted within a secure building and in a spot which allows regular and convenient monitoring of meters and indicator lights. All wiring to rectifiers must comply with local and national electrical codes.

Rectifiers are available with optional equipment which facilitates periodic monitoring and provides an indication that power is available to impressed current anodes. It is suggested that the equipment listed below should be mounted on the front panel of each rectifier cabinet:

- Green and red signal lights to indicate proper/improper rectifier operation.
- A volt-ammeter for measuring rectifier voltage and current output.
- A non-resettable elapsed time meter with a minimum hour capacity of 99,999 hours.
- Warning sign stating that this is a cathodic protection rectifier and that corrosion of underground structures can result if power to the unit is shut off.

Optional audio alarm signals, which sound if a rectifier is not operating properly, may be useful in some situations.

The AC power source to a rectifier should be isolated to an individual circuit breaker on the main electrical panel. This breaker switch should have a tab-lockout bracket installed, if permitted by local code, to prevent inadvertent switching-off of the rectifier. Rectifier cabinets should be sealed or padlocked to prevent unauthorized entry to the on-off AC circuit breaker and other exposed high voltage contacts within the cabinet.

Several materials are used as impressed current anodes. The most common are:

- graphite
- high silicon cast iron
- platinized niobium, tantalum or titanium

Each anode material has an optimum current density which provides maximum anode service life. Anodes may be located in remote ground beds, in deep wells, or distributed closely about the structure to be protected. The latter two designs may be required to:

- avoid physical interference with existing facilities
- provide better current distribution
- avoid stray current interference with off-site structures

The number of anodes used in a particular remote groundbed or deep-well cathodic protection design will thus be determined largely by total structure current requirements and the optimum current density of the anode material selected. For a distributed anode design, additional anodes may be installed to provide more uniform current distribution.

Impressed current anodes are typically installed in carbonaceous backfill. If the backfill is installed properly, much of the current reaching the anode is conducted to the backfill by electrical contact. This promotes consumption of the backfill instead of the anode and substantially lengthens the effective anode life. Carbonaceous backfill also tends to reduce total circuit resistance by lowering anode to soil resistance.

THE NEGATIVE LEAD OF THE RECTIFIER MUST BE ATTACHED TO THE STRUCTURE TO BE PROTECTED. If the structure is mistakenly attached to the positive lead, it will serve as an anode and rapid corrosion failure can result. A weld connection powder; (e.g. Cadweld or Thermit type) is the preferred means for connecting the negative rectifier lead wire to the underground structure but good mechanical connections may be substituted if necessary. All connections and wire splices should be carefully waterproofed and covered with electrical insulating material.

All underground wire which is attached to the positive rectifier terminal is at a positive potential with respect to ground. If not completely insulated, the wire may discharge current (act as an anode) which will result in corrosion of the wire with subsequent failure of the cathodic protection installation. Therefore, all anode lead wires, header cable and any wire splices should be carefully inspected prior to backfilling. Backfill should be free of sharp stones or other material which could damage wire insulation.

At least three criteria are applicable for determining if impressed current cathodic protection has achieved corrosion protection of underground petroleum storage tanks and distribution piping:

- A negative potential of at least 0.85 volts measured between the structure and a saturated copper-copper sulfate reference electrode contacting the soil electrolyte. This reading should be made with the rectifier turned on.
- A polarization decay voltage shift of at least 0.10 volts, after the rectifier is turned off, between the structure and a saturated copper-copper sulfate reference electrode contacting the soil electrolyte. An immediate voltage shift will occur when the current is turned off. The voltage reading noted after this immediate shift should be used as the initial reading to begin measuring the 0.10 volt decay.
- A negative voltage shift of at least 0.30 volts between the structure and a saturated copper-copper sulfate reference electrode contacting the soil electrolyte when the protective current is first applied. For well coated structures, this shift will occur very rapidly, for bare or poorly coated structures, the shift may continue over several hours.

Considerations in measuring structure to soil electrolyte potentials previously discussed under sacrificial anode protection are, of course, also applicable to structures protected by impressed current systems. Permanent soil access manholes over underground structures or buried long-life reference electrodes should be included as part of each impressed current cathodic protection installation. Constant potential rectifiers are available which use buried reference electrodes to automatically control rectifier current output to the anodes and thereby maintain a constant preset potential on a structure. These rectifiers are particularly useful for installations subject to periodic stray currents or in areas where there are wide variations in soil resistivity due to soil moisture changes.

When an impressed current system is energized, a qualified person familiar with cathodic protection equipment and theory should measure structure to soil potentials according to one or more of the appropriate criteria given above. STRUCTURE TO STRUCTURE POTENTIALS BETWEEN PROTECTED STRUCTURES AND OTHER BURIED STRUCTURES AT THE SITE (INCLUDING ALL UNDERGROUND UTILITY SYSTEMS) SHOULD BE MEASURED TO VERIFY THAT BONDING OR INSULATION PROVISIONS INCLUDED IN THE CATHODIC PROTECTION DESIGN HAVE BEEN MET. Necessary adjustments of rectifier output should be made based on these results and appropriate structure to soil potential readings. Procedures used and data obtained during this initial survey should be recorded in permanent cathodic protection records for the location. The name of the person making the measurements and the date measurements were made should also be noted on the record sheet.

Metallic bonds between cathodically protected structures and adjacent buried structures belonging to others may occasionally be necessary to satisfy interference problems. Such bonds should only be made after obtaining permission from the owner of the foreign structure and usually entail a mutual testing program witnessed by representatives of both structure owners.

Monthly checks of rectifiers are necessary to verify that the units are operational. Annual surveys of structure to soil potentials and structure to structure potentials of an impressed current system are also necessary to assure continued satisfactory operations. Surveys should be conducted using procedures outlined above for the initial startup survey. Results obtained should be added to the permanent cathodic protection records for the location.

Recommended Practice for Underground Petroleum Product Storage Systems at Marketing and Distribution Facilities

API RECOMMENDED PRACTICE 1635
FIRST EDITION, APRIL 1984

American Petroleum Institute
1220 L Street, Northwest
Washington, D.C. 20005

Recommended Practice for Underground Petroleum Product Storage Systems at Marketing and Distribution Facilities

Marketing Department

API RECOMMENDED PRACTICE 1635
FIRST EDITION, APRIL 1984

American
Petroleum
Institute

FOREWORD

The prevention and detection of product leakage from petroleum storage and dispensing systems is important to both industry and the public. This recommended practice is offered as a guide for voluntary use by architects, engineers, marketers, jobbers, and contractors in the design, use, and maintenance of such systems.

Federal, state, and municipal codes or laws may have specific restrictions or requirements that must be taken into account prior to the installation of underground tanks and piping.

The American Petroleum Institute takes no position as to whether any procedure, method, device, or product mentioned in this publication is covered by existing patent or copyright or as to the validity of such coverage. The publication does not grant the right, by implication or otherwise, to manufacture, sell, or use such procedures, methods, devices, or products so covered nor does it insure anyone against liability for infringement of such patents or copyrights.

This publication is available for general use by those interested, but the American Petroleum Institute shall not be responsible or liable in any way for loss or damage resulting from such use or for the violation of any federal, state, or municipal regulation with which it may conflict.

CONTENTS

PAGE

1—GENERAL
1.1 Scope 1
1.2 General Provisions 1

2—DEFINITIONS
2.1 Underground Petroleum Product Storage Tank Systems 1
2.2 Marketing and Distribution Facilities 1
2.3 Authority Having Jurisdiction 1
2.4 Combustible Liquid 1
2.5 Flammable Liquid 1
2.6 Listed 1
2.7 Operator 1
2.8 Owner 1
2.9 Product Line Leak Detector 2
2.10 Remote Pumping System 2
2.11 Suction Product System 2
2.12 Product Handling System 2
2.13 Observation Well 2
2.14 Secondary Containment 2

3—PREVENTION
3.1 Selecting and Installing Underground Tanks 2
3.1.1 New Facilities 2
3.1.2 Existing Facilities 2
3.2 Piping 3
3.2.1 New Facilities 3
3.2.2 Existing Facilities 3
3.3 Pumping Systems 3
3.3.1 New Facilities 3
3.3.2 Existing Facilities 3

4—DETECTION
4.1 Inventory Control for New and Existing Facilities 4
4.2 Testing 5
4.2.1 New Facilities 5
4.2.2 Existing Facilities 5
4.3 Observation Wells 5
4.3.1 New Facilities 5
4.3.2 Existing Facilities 6
4.4 Secondary Containment 6
4.4.1 New Facilities 6
4.4.2 Existing Facilities 6

Recommended Practice for Underground Petroleum Product Storage Systems at Marketing and Distribution Facilities

1—GENERAL

1.1 Scope

This recommended practice describes measures necessary to prevent and detect leaks from underground petroleum product storage tank systems, as defined in 2.1, at marketing and distribution facilities, as defined in 2.2.

1.2 General Provisions

1.2.1 This recommended practice applies to underground petroleum product storage tank systems at marketing and distribution facilities, except fuel oil containers of less than 1100 gallons capacity connected to burning equipment and underground storage tanks for liquefied petroleum or natural gases.

1.2.2 In particular installations, the provisions of this recommended practice may be altered at the discretion of the authority having jurisdiction after consideration of special features, such as, topographical conditions, barricades, walls, water tables, soil conditions, and proximity to buildings and adjoining property.

2—DEFINITIONS

2.1 Underground Petroleum Product Storage Tank Systems

Underground petroleum product storage tank systems are tanks totally buried underground and the related system composed of storage tank(s), product line(s) to dispensing pump(s), vent line(s), tank fill line(s), dispensing pump(s), dispensers(s), and appurtenances for the storage or dispensing of petroleum products. This recommended practice does not apply to aboveground storage tanks that are partially buried or below grade, which are in compliance with other fire and safety codes, or are excluded in 1.2.1.

2.2 Marketing and Distribution Facilities

Marketing and distribution facilities are retail, commercial, and private facilities that store and dispense flammable or combustible liquids to consumers. This recommended practice does not apply to distribution centers with aboveground tankage or to product pipelines, both of which are covered by other standards.

2.3 Authority Having Jurisdiction

Authority having jurisdiction shall mean the organization, office, or individual responsible for approving equipment, installations, or procedures.

2.4 Combustible Liquid

A *combustible liquid* is a liquid having a flash point at or above 100°F (37.8°C).

2.5 Flammable Liquid

A *flammable liquid* is a liquid having a flash point below 100°F (37.8°C) and having a vapor pressure not exceeding 40 pounds per square inch absolute at 100°F (37.8°C) and shall be known as a Class I liquid.

2.6 Listed

Listed shall mean equipment or materials included in a list published by a nationally recognized testing laboratory, inspection agency, or other organization concerned with product evaluation that maintains periodic inspection of the production of listed equipment or materials and whose listing states either that the equipment or material meets nationally recognized standards or has been tested and found suitable for use in a specified manner.

2.7 Operator

The *operator* is the lessee or person(s) in control of and having responsibility for the daily operation of the facility for the storage, use, or dispensing of flammable and combustible liquids.

2.8 Owner

The *owner* is the person(s) who owns the tank storage system used for the storage, use, or dispensing of flammable and combustible liquids.

PROFESSIONAL SERVICES GROUP, INC.
Central Region — The Hinchman Company
Corrosion Engineers

RESULTS OF

CATHODIC PROTECTION TESTING

ON

STI-P-3 TANKS

Prepared for

Non-Corrosive Products Division
Owens Corning Fiberglas Corporation
Fiberglas Towers
Toledo, Ohio 43601

Reference

Our Job Number: 82304-982-5209

February 7, 1984

Prepared by

PSG/HINCHMAN COMPANY
Corrosion Engineers
1605 Mutual Building
Detroit, Michigan 48226

John H. Fitzgerald, III

John H. Fitzgerald, III, P.E.
Vice President

PROFESSIONAL SERVICES GROUP, INC.
Central Region — The Hinchman Company
Corrosion Engineers

TABLE OF CONTENTS

Section	Description	Page
1.	INTRODUCTION	1
1.1	Objective	1
1.2	Summary	1
2.	TEST EQUIPMENT AND PROCEDURES	2
2.1	Instrumentation	2
2.2	Contact to the Tank	3
2.3	Contact to Earth	4
3.	FIELD OBSERVATIONS	5
4.	CONCLUSIONS AND RECOMMENDATIONS	5
4.1	General	5
4.2	Initial Site Survey	5
4.3	Maintenance of Cathodic Protection	5
4.4	Contact to the Tank	6
4.5	Contact to the Earth	6
5.	TEST DATA	7

1605 Mutual Building, Detroit, Michigan 48226 · 313-962-5272

PROFESSIONAL SERVICES GROUP, INC.
Central Region — The Hinchman Company
Corrosion Engineers

RESULTS OF CATHODIC PROTECTION TESTING ON STI-P-3 TANKS

1. INTRODUCTION

1.1 Objective

The objective of this investigation was to determine the effectiveness of cathodic protection on a sampling of STI-P-3 tanks.

1.2 Summary

During the period from April, 1980 to January, 1983, corrosion engineers of PSG/Hinchman Company performed field tests on installed Steel Tank Institute (STI) P-3 tanks. Location of tanks was supplied by Owens Corning Fiberglas Corporation and was based on their knowledge of facilities where STI-P-3 tanks had been installed. This was not a scientific sampling nor are the results necessarily representative of typical STI-P-3 tanks.

A total of 80 tanks, located in four states, were investigated. These tanks had storage capacities ranging from 1,000 gallons to 12,000 gallons. They had been installed at a variety of locations, including state fueling depots, industrial plants, and service stations.

The data indicate that the STI-P-3 cathodic protection system generally is effective in protecting a tank from external soil corrosion if all of the system's components and the tank itself are properly installed and maintained.

Of the 80 tanks investigated, three were inaccessible for testing and data for one tank were inconclusive because the potential measurement had to be taken over asphalt paving. Of the remaining 76 tanks, test data indicate that 63 (83 percent) were adequately protected from external corrosion. The cathodic protection system on eight tanks (10 percent) did not meet the selected criterion for adequate protection because the insulating bushings were shorted (electrically conductive or bypassed). Five other tanks (7 percent) did not meet the selected criterion for cathodic protection at the time they were tested; we did not investigate the reasons for this, but possible reasons include the tanks not having been in service long enough for protection to become complete, an anode malfunction or coating damage on the tank.

1605 Mutual Building, Detroit, Michigan 48226 313-962-5272

2. TEST EQUIPMENT AND PROCEDURES

2.1 Instrumentation

2.1.1 Structure-to-Soil Potentials

Tank-to-soil and pipe-to-soil potential measurements were obtained with an M. C. Miller Model LC-1 voltmeter and a copper-copper sulfate reference half-cell. The instrumentation is shown in Figure Number 1. These measurements are used to determine the effectiveness of cathodic protection by comparing the data with the criterion described in Section 5. Potential measurements are also used to establish the effectiveness of dielectric insulation.

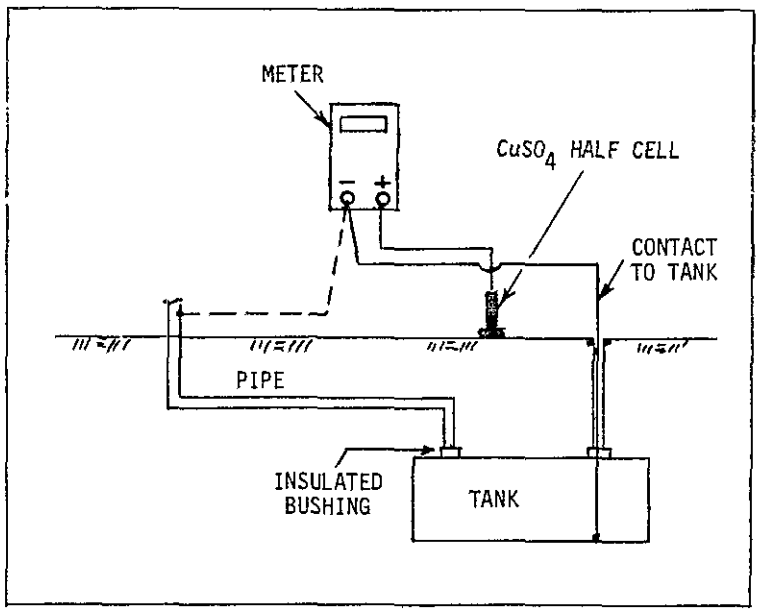

Figure Number 1 - Structure-To-Soil Potential Measurements

2.1.2 Soil Resistivity

Soil resistivity tests provide a means of measuring the resistance of the soil to the flow of corrosive electrical current. Resistivity was measured for 5-foot and 10-foot depths using the Wenner Four Electrode Method and a Model 293 "Vibroground" meter as shown in Figure Number 2.

1605 Mutual Building, Detroit, Michigan 48226 313-962-5272

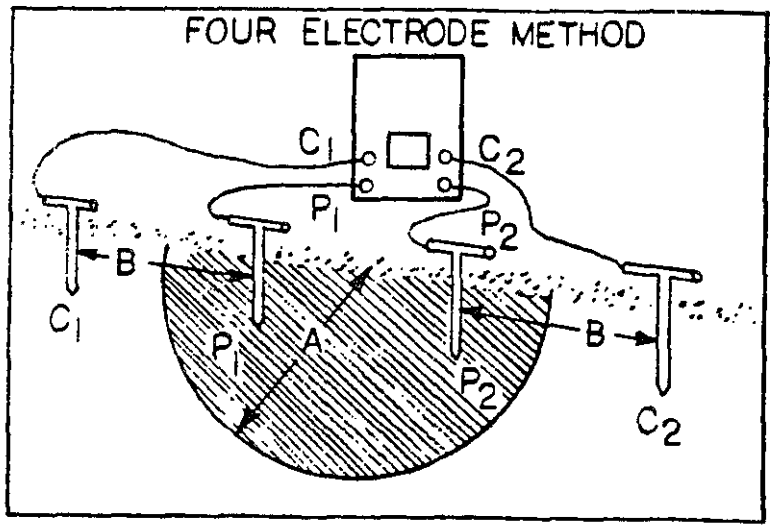

P	=	Soil Resistivity
A	=	Depth, Feet
A = B	=	Pin Spacing
R	=	Meter Reading
P	=	191.51 x A x R

Figure Number 2 - Soil Resistivity Measurement

2.2 Contact to the Tank

None of the tanks investigated during this project were equipped with a Protection Prover test station. The only tanks having test wires were at Midwestern Industrial Plant Number 3 (See Table V).

For this project, electrical contact with the tank was made either by contacting the tank at the manway (on those tanks constructed with a manway), or by inserting a probe into the tank as shown in Figure Number 3. The probe was lowered through the fill pipe to make electrical contact with the inside of the tank.

1605 Mutual Building, Detroit, Michigan 48226 313-962-5272

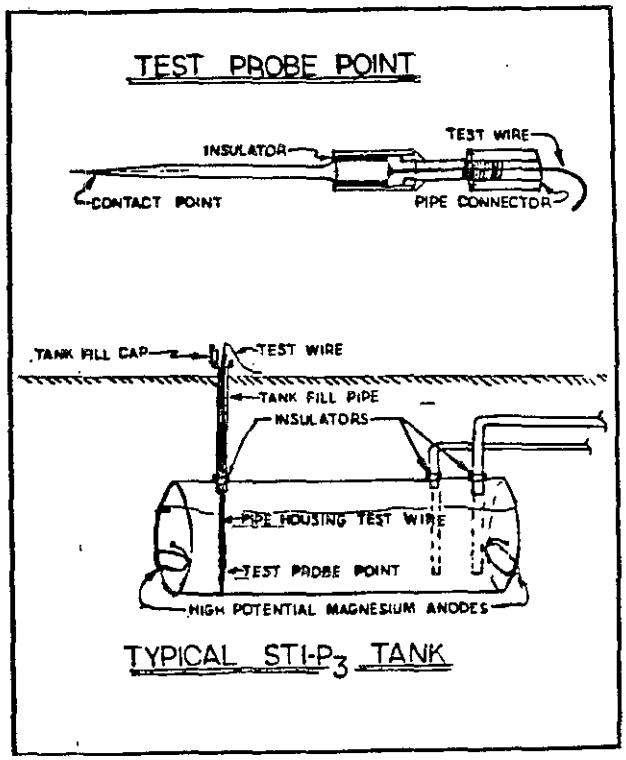

Figure Number 3 - Contact To Tank

2.3 Contact to Earth

We found it difficult at many installations to obtain good contact to earth for the copper-copper sulfate half-cell as test access holes to the soil had not been installed at the time when concrete or asphalt was placed over the tanks. This is a typical problem encountered when testing these tanks, but care was taken to obtain the best possible contact to earth in order to assure reliable data.

1605 Mutual Building, Detroit, Michigan 48226 313-962-5272

3. FIELD OBSERVATIONS

As noted earlier, of the 77 STI-P-3 tanks tested, data indicate that 63 were adequately protected from corrosion. The corrosion protection system was not functioning properly on 8 tanks because of shorted insulators. A shorted condition is indicated where the tank-to-soil potential is below the selected criterion and there is no difference between tank and pipe-to-soil potentials.

We were unable to detect a pattern for insulator failures. Possibly insulators were broken, or were installed improperly. Also, insulators may have failed after tanks had been installed and placed in service. Possibly too, tanks had been connected to a grounding system, thus bypassing the insulators.

4. CONCLUSIONS AND RECOMMENDATIONS

4.1 General

This investigation pointed up several factors that should be considered by owners utilizing steel underground storage tanks. These are discussed below.

4.2 Initial Site Survey

An initial site survey is necessary to determine if corrosive soil or stray current conditions exist. NFPA 30-1981 (National Fire Protection Association Flammable and Combustible Liquids Code) requires that the site corrosivity be determined before tank installation. API Publication 1615, Installation of Underground Petroleum Storage Systems, also points out the importance of a preliminary site survey.

4.3 Maintenance of Cathodic Protection

NFPA 30 also requires that cathodic protection be properly maintained. This can be accomplished by periodic maintenance tests made to determine the effectiveness of the protection and to uncover malfunctions such as shorted insulating bushings. It is our opinion that the malfunctions discovered during this investigation might have been corrected had initial tests been made upon completion of tank installation.

Periodic maintenance tests at regular intervals are necessary to determine if cathodic protection is being maintained. In cases where the protection criterion is not reached initially, the tests should be repeated at a later date to determine when protection is reached. We found one such case during this investigation; see Note 4 on Table III.

1605 Mutual Building, Detroit, Michigan 48226 313-962-5272

The importance of initial and routine monitoring is stressed in API Publication 1632, Cathodic Protection of Underground Petroleum Storage Tanks and Piping Systems. The publication recommends that initial tests be run within six to twelve months of installation and one year thereafter. Subsequent monitoring tests are recommended at five year intervals, although it is our opinion that two year intervals are safer. API 1632 does, however, recommend that if any underground work is done at the protected site, a new set of monitoring tests should be initiated.

4.4 Contact to the Tank

Cathodic protection is monitored by measuring the tank-to-soil potential. This measurement requires electrical contact to the tank. To provide this contact, test wires should be attached to the tank. The STI-P-3 Protection Prover provides these test wires.

Tank piping cannot be used for contact because of the insulated bushings at the connection of the piping to the tank. If the tank has a manway, contact to the tank may be possible in the manway.

A probe such as shown in Figure Number 3 can be used on all STI-P-3 tanks except those having fill pipes that are not vertical. The probe should not be used on tanks that are internally lined, however, as the probe will damage the lining.

4.5 Contact to the Earth

When tanks are located under asphalt or concrete paving, it may be difficult to obtain proper reference half-cell contact with the earth. API Publication 1632 notes that special equipment and trained personnel may be required to obtain and interpret results where no direct earth contact is available.

Test access holes such as shown in Figure Number 4 should be installed whenever cathodically protected tanks are located under paving. This recommendation also appears in API Publication 1632.

An alternative to test access holes is the installation of buried permanent reference half-cells. These can then be used to monitor cathodic protection.

1605 Mutual Building, Detroit, Michigan 48226 313-962-5272

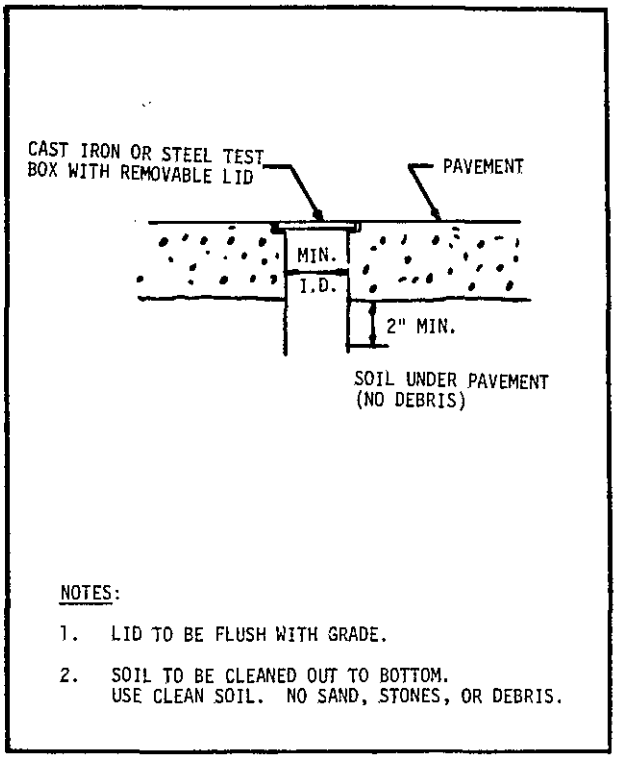

Figure Number 4 - Test Access Hole

5. TEST DATA

Test data and comments are contained in the following tables.

The criterion used to determine whether or not there was adequate cathodic protection of these steel tanks was a negative (cathodic) voltage of at least 0.85 volt, as measured between the structure and a saturated copper-copper sulfate half-cell contacting the soil. This well established criterion is recognized in many publications, including the following:

Steel Tank Institute Publication

The STI-P-3 Think Tank, Protection Prover 1 Monitoring System

1605 Mutual Building, Detroit, Michigan 48226 313-962-5272

American Petroleum Institute Publication 1632

Cathodic Protection of Underground Petroleum Storage Tanks and Piping Systems

National Association of Corrosion Engineers Recommended Practice RP-01-69

Control of External Corrosion on Underground or Submerged Metallic Piping Systems

United States Department of Transportation, Materials Transportation Bureau, Office of Pipeline Safety - Regulations for the Transportation of Natural and Other Gas by Pipeline, Title 49 of the Code of Federal Regulations, Part 192, Subpart I, Requirements for Corrosion Control, Appendix D.

1605 Mutual Building, Detroit, Michigan 48226 313-962-5272

PROFESSIONAL SERVICES GROUP, INC.
Central Region — The Hinchman Company
Corrosion Engineers

TABLE I:

Site	-	Eastern State Fueling Depots
Number of Tanks Tested	-	17
Date of Installation	-	1978 - 1979
Piping Material	-	Unknown

Test Number	Location	Tank Size	Average Potentials (Volts) Tank	Pipe	Average Soil Resistivity (Ohm-Cm) 5 Feet	10 Feet	Comments
1	Tank 1	10,000	0.68	0.68	13,400	30,600	Tank is shorted.
2	Tank 2	2,000	1.26	1.01	30,600	38,300	
3	Tank 3	10,000	1.25	**	115,000	144,000	
4	Tank 4	10,000	1.29*	**	115,000	144,000	
5	Tank 5	10,000	1.20	0.73	23,000	14,900	
6	Tank 6	10,000	0.73	0.73	23,000	14,900	Tank is shorted.
7	Tank 7	10,000	1.00	**	3,830	7,080	
8	Tank 8	10,000	1.24	**	13,400	16,500	
9	Tank 9	4,000	1.14	**	13,400	16,500	
10	Tank 10	10,000	1.47	0.71	2,340	5,930	

* Reading through concrete.

** Piping inaccessible for testing.

continues . . .

1605 Mutual Building, Detroit, Michigan 48226 313-962-5272

TABLE I: Continued.

Test Number	Location	Tank Size	Average Potentials (Volts) Tank	Average Potentials (Volts) Pipe	Average Soil Resistivity (Ohm-Cm) 5 Feet	Average Soil Resistivity (Ohm-Cm) 10 Feet	Comments
11	Tank 11	10,000	1.30	**	8,430	10,900	
12	Tank 12	2,000	1.10	0.68	20,100	17,600	
13	Tank 13	2,000	1.10	0.68	20,100	17,600	
14	Tank 14	6,000	1.18	0.71	7,180	13,400	
15	Tank 15	10,000	1.40	0.51	72,800	134,000	
16	Tank 16	2,000	1.41	0.65	3,640	10,500	
17	Tank 17	10,000	1.47	0.65	39,300	12,800	

Data indicate that 15 of the tanks tested are adequately protected. The cathodic protection systems on Tanks 1 and 6 did not meet the selected criterion for cathodic protection because of shorted insulators.

1605 Mutual Building, Detroit, Michigan 48226 313-962-5272

TABLE II:

Site	-	Northeastern State Fueling Depots
Number of Tanks Tested	-	6
Date of Installation	-	1976 (Tanks 1-4), 1977 (Tank 6), 1979 (Tank 5)
Piping Material	-	Unknown

Test Number	Location	Tank Size	Average Potentials (Volts) Tank	Average Potentials (Volts) Pipe	Average Soil Resistivity (Ohm-Cm) 5 Feet	Average Soil Resistivity (Ohm-Cm) 10 Feet	Comments
18	Tank 1	6,000	0.64	**	2,870	4,020	Tank is shorted.
19	Tank 2	6,000	1.16	**	4,500	8,810	
20	Tank 3	4,000	0.76*	**	10,500	16,700	
21	Tank 4	8,000	1.30	**	9,630	15,800	
22	Tank 5	6,000	1.37	**	9,630	15,800	
23	Tank 6	8,000	0.94	**	14,400	38,300	

* Reading made through asphalt.

** Pipe inaccessible.

Data indicate that four of the six tanks are adequately protected. The cathodic protection system on Tank 1 did not meet the selected criterion for cathodic protection because of shorted insulators. Reading for Tank 3 is inconclusive because of asphalt paving.

1605 Mutual Building, Detroit, Michigan 48226 313-962-5272

PROFESSIONAL SERVICES GROUP, INC.
Central Region — The Hinchman Company
Corrosion Engineers

TABLE III:

Site	-	Midwestern Industrial Plant Number 1
Number of Tanks Tested	-	12
Date of Installation	-	1980
Piping Material	-	Copper

Test Number	Location	Tank Size	Average Potentials (Volts) Tank	Average Potentials (Volts) Pipe	Average Soil Resistivity (Ohm-Cm) 5 Feet	Average Soil Resistivity (Ohm-Cm) 10 Feet	Comments
24	Tank 19	12,000	0.87	0.62	4,000	4,000	See Note 4.
25	Tank 20	12,000	0.83	0.63	4,000	4,000	See Note 2.
26	Tank 21	12,000	0.87	0.24	4,000	4,000	
27	Tank 22	12,000	1.14	0.19	4,000	4,000	
28	Tank 23	12,000	0.92	0.14	4,000	4,000	
29	Tank 24	12,000	0.59	0.59	4,000	4,000	Tank is shorted.
30	Tank 25	12,000	0.98	0.60	4,000	4,000	
31	Tank 26	12,000	1.09	0.16	4,000	4,000	
32	Tank 27	12,000	0.86	0.53	4,000	4,000	See Note 4.
33	Tank 28	12,000	0.56	0.56	4,000	4,000	Tank is shorted.
34	Tank 29	12,000	0.79	0.54	4,000	4,000	See Note 2.
35	Tank 30	12,000	0.77	0.42	4,000	4,000	See Note 2.

continues . . .

1605 Mutual Building, Detroit, Michigan 48226 313-962-5272

PROFESSIONAL SERVICES GROUP, INC.
Central Region — The Hinchman Company
Corrosion Engineers

TABLE III: Continued.

1. Data indicate that seven tanks are adequately protected.

2. At the time the data were collected, the protection system for Tanks 20, 29 and 30 did not meet the selected criterion for cathodic protection.

3. The cathodic protection systems on Tanks 24 and 28 did not meet the selected criterion for cathodic protection because of shorted insulators.

4. Tests made in 1981 disclosed that the protection systems for Tanks 19 and 27 did not meet the selected criterion for cathodic protection. We returned to the site early in 1983 and obtained the above data; the 1983 data indicate that these tanks now meet the selected criterion for cathodic protection. This shows the need to test cathodic protection on a regular basis.

1605 Mutual Building, Detroit, Michigan 48226 313-962-5272

PROFESSIONAL SERVICES GROUP, INC.
Central Region — The Hinchman Company
Corrosion Engineers

TABLE IV:

Site	-	Midwestern Industrial Plant Number 2
Number of Tanks Tested	-	28
Date of Installation	-	1980
Piping Material	-	Copper

Test Number	Location	Tank Size	Average Potentials (Volts) Tank	Average Potentials (Volts) Pipe	Average Soil Resistivity (Ohm-Cm) 5 Feet	Average Soil Resistivity (Ohm-Cm) 10 Feet	Comments
36	Tank 31	1,000	1.08	0.26	4,000	4,000	
37	Tank 32	1,000	1.24	0.29	4,000	4,000	
38	Tank 33	1,000	1.27	0.29	4,000	4,000	
39	Tank 34	1,000	1.19	0.29	4,000	4,000	
40	Tank 35	1,000	1.23	0.20	4,000	4,000	
41	Tank 36	1,000	0.98	0.27	4,000	4,000	
42	Tank 37	1,000	1.09	0.27	4,000	4,000	
43	Tank 38	1,000	1.47	0.49	4,000	4,000	
44	Tank 39	1,000	1.45	0.49	4,000	4,000	
45	Tank 40	1,000	1.27	0.46	4,000	4,000	
46	Tank 41	1,000	1.35	0.41	4,000	4,000	
47	Tank 42	1,000	1.07	0.41	4,000	4,000	

continues . . .

1605 Mutual Building, Detroit, Michigan 48226 313-962-5272

TABLE IV: Continued.

Test Number	Location	Tank Size	Average Potentials (Volts) Tank	Average Potentials (Volts) Pipe	Average Soil Resistivity (Ohm-Cm) 5 Feet	Average Soil Resistivity (Ohm-Cm) 10 Feet	Comments
48	Tank 43	1,000	1.10	0.41	4,000	4,000	
49	Tank 44	1,000	1.35	0.40	4,000	4,000	
50	Tank 45	1,000	1.15	0.42	4,000	4,000	
51	Tank 46	1,000	1.17	0.39	4,000	4,000	
52	Tank 47	1,000	1.40	0.54	4,000	4,000	
53	Tank 48	1,000	1.24	0.54	4,000	4,000	
54	Tank 49	1,000	1.21	0.54	4,000	4,000	
55	Tank 50	1,000	1.53	0.54	4,000	4,000	
56	Tank 51	1,000	1.59	0.91	4,000	4,000	
57	Tank 52	1,000	1.74	0.88	4,000	4,000	
58	Tank 53	1,000	1.02	0.91	4,000	4,000	
59	Tank 54	1,000	1.55	0.88	4,000	4,000	
60	Tank 55	1,000	1.27	0.53	4,000	4,000	

continues . . .

1605 Mutual Building, Detroit, Michigan 48226 313-962-5272

PROFESSIONAL SERVICES GROUP, INC.
Central Region — The Hinchman Company
Corrosion Engineers

TABLE IV: Continued.

Test Number	Location	Tank Size	Average Potentials (Volts) Tank	Pipe	Average Soil Resistivity (Ohm-Cm) 5 Feet	10 Feet	Comments
61	Tank 56	1,000	1.24	0.53	4,000	4,000	
62	Tank 57	1,000	1.18	0.35	4,000	4,000	
63	Tank 58	1,000	1.24	0.49	4,000	4,000	

Data indicate that all 28 tanks are adequately protected.

1606 Mutual Building, Detroit, Michigan 48226 313-962-5272

PROFESSIONAL SERVICES GROUP, INC.
Central Region — The Hinchman Company
Corrosion Engineers

TABLE V:

Site	-	Midwestern Industrial Plant Number 3
Number of Tanks Tested	-	6
Date of Installation	-	1980
Piping Material	-	Fiberglass Reinforced Plastic

Test Number	Location	Tank Size	Average Potentials (Volts) Tank	Average Potentials (Volts) Pipe	Average Soil Resistivity (Ohm-Cm) 5 Feet	Average Soil Resistivity (Ohm-Cm) 10 Feet	Comments
64	Tank 1	12,000	Tank Inaccessible for Testing				
65	Tank 2	12,000	Tank Inaccessible for Testing				
66	Tank 3	6,000	0.74	**	4,000	4,000	Tank is shorted.
67	Tank 4	6,000	0.75	**	4,000	4,000	Tank is shorted.
68	Tank 5	6,000	0.79	**	4,000	4,000	Tank is shorted.
69	Tank 6	1,500	Tank Inaccessible for Testing				

** Piping inaccessible for testing.

The three tanks which were accessible for testing are bonded together and connected to a test station. Data obtained from the test station indicate that these tanks did not meet the selected criterion for cathodic protection because they are shorted to a nearby gasoline pump.

1605 Mutual Building, Detroit, Michigan 48226 313-962-5272

PROFESSIONAL SERVICES GROUP, INC.
Central Region — The Hinchman Company
Corrosion Engineers

TABLE VI:

Site	-	Midwestern Industrial Plant Number 4
Number of Tanks Tested	-	2
Date of Installation	-	1977
Piping Material	-	Black Steel

Test Number	Location	Tank Size	Average Potentials (Volts) Tank	Pipe	Average Soil Resistivity (Ohm-Cm) 5 Feet	10 Feet	Comments
70	Tank 1	Unknown	0.72	0.410	2,900	3,850	
71	Tank 2	Unknown	0.83	0.416	2,900	3,850	

At the time the data were collected, the protection systems for these tanks did not meet the selected criterion for cathodic protection.

1605 Mutual Building, Detroit, Michigan 48226 313-962-5272

PROFESSIONAL SERVICES GROUP, INC.
Central Region — The Hinchman Company
Corrosion Engineers

TABLE VII:

Site	-	Midwestern Service Station Number 1
Number of Tanks Tested	-	5
Date of Installation	-	1979
Piping Material	-	Galvanized Steel

Test Number	Location	Tank Size	Average Potentials (Volts) Tank	Average Potentials (Volts) Pipe	Average Soil Resistivity (Ohm-Cm) 5 Feet	Average Soil Resistivity (Ohm-Cm) 10 Feet	Comments
72	Tank 1	Unknown	1.65	0.93	1,960	2,200	
73	Tank 2	Unknown	1.65	0.93	1,960	2,200	
74	Tank 3	Unknown	1.59	0.93	1,960	2,200	
75	Tank 4	Unknown	1.65	0.93	1,960	2,200	
76	Tank 5	Unknown	1.65	0.93	1,960	2,200	

Data indicate that these tanks are adequately protected.

1605 Mutual Building, Detroit, Michigan 48226 313-962-5272

PROFESSIONAL SERVICES GROUP, INC.
Central Region — The Hinchman Company
Corrosion Engineers

TABLE VIII:

Site	-	Midwestern Service Station Number 2
Number of Tanks Tested	-	4
Date of Installation	-	1979
Piping Material	-	Galvanized Steel

Test Number	Location	Tank Size	Average Potentials (Volts) Tank	Average Potentials (Volts) Pipe	Average Soil Resistivity (Ohm-Cm) 5 Feet	Average Soil Resistivity (Ohm-Cm) 10 Feet	Comments
77	Tank 1	4,000	1.65	1.65	4,700	5,800	
78	Tank 2	4,000	1.65	1.65	4,700	5,800	
79	Tank 3	4,000	1.65	1.65	4,700	5,800	
80	Tank 4	4,000	1.65	1.65	4,700	5,800	

Data show the tanks and piping to be well protected from both soil and stray current corrosion. During this investigation the owner reported to us that the original STI-P-3 tanks, installed in 1972, failed in 1979 due to stray current from a nearby cathodic protection installation. The tanks were replaced and provided with stray current mitigation bonds. The problem might have been prevented had an initial site survey been performed before tank installation.

1605 Mutual Building, Detroit, Michigan 48226 313-962-5272

2.9 Product Line Leak Detector

A *product line leak detector* is a device used to detect product or pressure losses in a pressurized product line or a remote pumping system.

2.10 Remote Pumping System

A *remote pumping system* is a pressurized product line system in which flammable or combustible liquids are supplied to a point(s) away from the tank(s) by means of a pumping unit(s) in or on the storage tank(s).

2.11 Suction Product System

A *suction product system* is a nonpressurized product line system in which flammable or combustible liquids are removed from the storage tank(s) by means of a pumping unit(s) located at a point(s) away from the storage tank(s).

2.12 Product Handling System

A *product handling system* is a system composed of storage tank(s), product line(s), vent line(s), tank fill line(s), pump(s), dispenser(s), and other apppurtances for the storage, use, or dispensing of flammable or combustible liquids.

2.13 Observation Well

An *observation well* is a dug or drilled, cased well that can be used for detecting the presence of flammable or combustible liquids and is drilled to a depth of approximately 24 inches below the tank bottom.

2.14 Secondary Containment

Secondary containment is an impervious barrier installed so that any volume of material leaked from the storage system is prevented from reaching the lands and/or water outside the impervious barrier for the anticipated period of time necessary to detect and recover the spilled material.

3—PREVENTION

3.1 Selecting and Installing Underground Tanks

3.1.1 NEW FACILITIES

3.1.1.1 Tanks shall be designed and built using noncorrosive material or cathodically protected steel.

3.1.1.2 A steel system as described in 3.1.1.1 shall be cathodically protected by an impressed current cathodic protection system, sacrificial anodes, or some other type of equivalent protection. If a cathodic protection system is used, it shall be maintained in accordance with 4.2.2.5.

3.1.1.3 Cathodically protected steel or approved noncorrosive coated steel underground tanks shall be set on a firm base and surrounded with at least 12 inches of noncorrosive inert material, such as clean sand or gravel, well tamped in place. The tanks shall be placed in the hole with care. Dropping or rolling the tank into the hole can break welds, puncture or damage the tank, scrape off the protective coating of coated tanks, or damage attached cathodic protection.

3.1.1.4 Cathodically protected steel or approved noncorrosive coated steel underground tanks shall be covered with a minimum of 2 feet of sand or shall be covered with not less than 1 foot of sand on top of which shall be placed a slab of reinforced concrete not less than 4 inches thick. When tanks are, or are likely to be, subjected to traffic, they shall be protected from damage from vehicles passing over them by at least 3 feet of backfill, 18 inches of well-tamped backfill plus 6 inches of reinforced concrete or 8 inches of asphalt paving. When asphalt or reinforced concrete paving is used as part of the protection, it shall extend at least 1 foot horizontally beyond the outline of the tank in all directions.

3.1.1.5 Nonmetallic underground tanks shall be installed in accordance with the manufacturer's instructions. The minimum depth of cover shall be as specified in 3.1.1.4.

3.1.1.6 The entire installation shall comply with the latest requirements of the National Fire Protection Association (NFPA)[1] 30, *Flammable and Combustible Liquids Code*, or the International Conference of Building Officials[2] *Uniform Fire Code*, as applicable.

3.1.1.7 All temporary supports must be removed prior to final backfilling.

3.1.2 EXISTING FACILITIES

3.1.2.1 If it is necessary to replace or coat the interior of an underground steel tank that developed a corrosion-induced leak, consideration should be given to coating the interior

[1]National Fire Protection Association, Batterymarch Park, Quincy, Massachusetts 02269.
[2]International Conference of Building Officials, 5360 South Workman Mill Road, Wittier, California.

or replacing all other steel tanks at the facility whether or not they are leaking. Replacement tanks should meet the requirements of 3.1.1.1 through 3.1.1.7. If the interior of an underground steel tank is being coated and the soil resistivity is less than 10,000 ohms per centimeter, the tank should be provided with cathodic protection.

3.1.2.2 Determinations to replace unprotected steel tanks should be based on specific site and soil conditions.

3.1.2.3 Tanks constructed of corrosion-resistant materials, cathodically protected steel tanks, or noncorrosive coated steel tanks need not be replaced based on arbitrary factors, such as age, alone.

3.1.2.4 Cathodic protection systems for steel tanks should be monitored sufficiently to ensure that continuous protection is being provided as prescribed by the designer or the manufacturer or both.

3.1.2.5 Tanks to be abandoned or removed should be handled in accordance with API Recommended Practice 1604.

3.2 Piping

3.2.1 NEW FACILITIES

3.2.1.1 All underground piping shall be approved nonmetallic pipe or cathodically protected Schedule 40 steel pipe. If a cathodic protection system is used, it shall be maintained in acccordance with 4.2.2.5.

3.2.1.2 Product lines shall be installed in a single trench between the tank area and the pump island. Similarly, underground vent lines shall be installed in a single trench. If secondary containment is provided, all lines should slope towards the tank area.

3.2.1.3 Before underground piping is installed, the trench shall receive as a minimum a 6-inch deep bed of well compacted noncorrosive material such as clean, washed sand or gravel. All trenches shall be wide enough to permit at least 6 inches of noncorrosive backfill material around all lines.

3.2.1.4 All piping shall be tested according to the requirements of 4.2.1.1.

3.2.1.5 All temporary supports must be removed prior to final backfilling.

3.2.2 EXISTING FACILITIES

3.2.2.1 Replacement of underground piping shall be done in accordance with 3.2.1.

3.2.2.2 Repair of underground piping shall be done in accordance with generally accepted industry practice.

3.3 Pumping Systems

3.3.1 NEW FACILITIES

3.3.1.1 Remote pumping systems shall be designed or equipped so that no part of the system will be subjected to pressures above allowable working pressures.

3.3.1.2 All new remote pumping systems shall be equipped with a product line leak detector. Leak detectors shall be tested in accordance with 4.2.1.3.

3.3.1.3 For remote pumping systems, a listed, rigidly anchored emergency shutoff valve, incorporating a fusible link or other thermally actuated device, designed to close automatically in the event of a severe impact or exposure to fire, shall be properly installed in the supply line at the base of each individual island-type dispenser. The automatic closing feature of this valve shall be checked at the time of initial installation and at least once a year thereafter by manually tripping the hold-open linkage.

3.3.1.4 Conventional suction systems may be used.

3.3.1.5 The operator shall advise the owner immediately should a leak detector signal a suspected product loss or a suction product system indicate a symptom of a potential leak [that is, a meter display jumping or skipping, liquid not being pumped when a pump is on, initial pump overspeed followed by slow pumping, erratic liquid flow (indicating an air and liquid mixture), continued loss of prime in the pumping unit, or others]. In no event shall the operator or his employees tamper with the leak detector.

3.3.1.6 When advised of a suspected leak by the operator, the owner shall take immediate action to verify the operation of the pumping system. Should a loss be determined, the owner shall take immediate corrective action. The affected pumping system shall be taken out of service until the necessary corrective action has been taken.

3.3.2 EXISTING FACILITIES

3.3.2.1 It is recommended that existing remote pumping systems be equipped with product line leak detectors. Leak detectors shall be tested in accordance with 4.2.2.6.

3.3.2.2 A listed, rigidly anchored emergency shutoff valve, incorporating a fusible link or other thermally actuated device, designed to close automatically in the event of a severe impact or exposure to fire, shall be properly installed in a remote pumping system supply line at the base of each

individual island-type dispenser. The automatic closing feature of this valve shall be checked at the time of initial installation and at least once a year thereafter by manually tripping the hold-open linkage.

3.3.2.3 The operator shall immediately advise the owner should a leak detector signal a suspected product loss or a suction product system indicate a symptom of a potential leak [that is, a meter display jumping or skipping, liquid not being pumped when a pump is on, initial pump overspeed followed by slow pumping, erratic liquid flow (indicating an air and liquid mixture), continued loss of prime in the pumping unit, and others]. In no event shall the operator or his employees tamper with the leak detector.

3.3.2.4 When advised of a suspected leak by the operator, the owner shall take immediate action to verify the operation of the pumping system. Should a loss be determined, the owner shall take immediate corrective action. The affected pumping system shall be taken out of service until the necessary corrective action has been taken.

4—DETECTION

4.1 Inventory Control for New and Existing Underground Facilities

4.1.1 Accurate daily inventory records shall be maintained and reconciled on all flammable and combustible underground liquid storage tanks for indication of possible leakage from tanks or piping. The records shall be made available for inspection by the enforcing authority and shall include, as a minimum, records showing by product, daily reconciliation between sales, use, receipts, and inventory on hand. If there is more than one system consisting of a tank(s), serving pump(s), or dispenser(s) for any product, the reconciliation shall be maintained separately for each tank system.

4.1.2 Daily inventory shall be maintained by the operator for each tank system at each location. The inventory records for the immediately preceding 12 months shall be kept at the premises.

4.1.3 Inventory shall be based on the actual daily measurement and recording of tank product and water levels and the daily recording of actual sales, use, and receipts. Daily measurements shall be made by gage or gage stick or by readout from an automated gaging system. The inventory records shall include a daily computation of gain or loss. The mere recording of pump meter readings and product delivery receipts shall not consistitute adequate inventory records.

4.1.4 The operator of the location shall be responsible for notifying the owner or person(s) in control of the facility to take action to correct any abnormal loss or gain not explained by spills, temperature variations, or other causes.

4.1.5 Failure to maintain inventory procedures and records as indicated in 4.1.1 through 4.1.4 may result in penalties by enforcing authorities.

4.1.6 As a minimum, the steps described in 4.1.6.1 through 4.1.6.8 shall be taken in an expeditious manner when daily inventory records indicate an abnormal loss.

4.1.6.1 The inventory records shall be checked for error.

4.1.6.2 If no error in inventory records is apparent, an independent calculation of apparent loss shall be made by a qualified person starting from a point in time where the records indicate a no-loss condition.

4.1.6.3 If the step described in 4.1.6.2 confirms an apparent loss, the readily accessible physical facilities on the premises shall be inspected carefully for evidence of leakage.

4.1.6.4 If the step described in 4.1.6.3 does not disclose a leak, the dispensers used with the particular product involved with the apparent loss shall be checked for calibration. The drain plugs within the dispenser should be sealed by drilling holes in plug protrusions and inserting wire lead seals. Fill pipe openings should be locked to prevent unauthorized product removal.

4.1.6.5 If the steps described in 4.1.6.1 through 4.1.6.4 do not explain the apparent loss and the regulatory reporting or testing requirements are not known, the situation shall be reported promptly to the authority having jurisdiction.

4.1.6.6 If the steps described in 4.1.6.1 through 4.1.6.4 do not explain the loss and if the piping system can be tested without excavation, the piping system between the storage tank and the dispenser(s) shall be tested in accordance with 4.2.1.1 for new facilities or 4.2.2.4 for existing facilities. If it is necessary to excavate to perform a piping test, such a test shall be conducted after a storage tank test has been performed in accordance with 4.1.6.7.

4.1.6.7 If the step described in 4.1.6.6 does not disclose a leak, the storage tank(s) shall be tested for tightness in

accordance with NFPA 329, *Underground Leakage of Flammable and Combustible Liquids.*

4.1.6.8 If the steps described in 4.1.6.1 through 4.1.6.7 do not confirm the apparent loss, the daily inventory shall be continued with a daily independent verification by a qualified person. Additional surveillance of the facility should be engaged to ensure against unauthorized removal of product.

4.1.7 Daily inventory need not be maintained on those days that an installation is not in operation. When the facility is not in operation, the daily inventory may be waived for periods not to exceed 15 days.

4.2 Testing

4.2.1 NEW FACILITIES

4.2.1.1 All piping shall be installed according to the manufacturer's recommendations. Before being covered, enclosed, or placed in use, the piping shall be hydrostatically tested to 150 percent of the maximum anticipated pressure of the system or pneumatically tested to 100 percent of the maximum anticipated pressure of the system, but not less than 50 pounds per square inch gage at the highest point of the system. If a pneumatic test is performed, all joints and connections shall be sprayed with a soap solution, and the test shall be maintained for a time sufficient to complete visual inspection of all joints and connections, but not less than 10 minutes.

4.2.1.2 New underground tanks shall be tested for tightness hydrostatically or with air pressure at not less than 3 pounds per square inch and not more than 5 pounds per square inch after installation but before being covered or placed in use.

NOTE: Air pressure tests shall not be conducted after petroleum product has been placed in the tank.

4.2.1.3 Product line leak detectors shall be tested for proper operation before the remote pumping system is used after initial installation.

4.2.2 EXISTING FACILITIES

4.2.2.1 The authority having jurisdiction may require the operator of an underground storage system to test the system for tightness, at the operator's expense, when accurate daily inventory records have not been maintained as specified in 4.1.2.

4.2.2.2 The authority having jurisdiction may require the owner of an underground tank storage system to test the system for tightness at the owner's expense when inventory records reveal an unexplained loss as specified in 4.1.4 or when flammable or combustible liquids or their vapors have been detected in neighboring structures, sewers, wells, or other on- or off-property location.

4.2.2.3 Product tanks shall not be pressure tested with air.

4.2.2.4 Piping tests as required in 4.2.2.1 and 4.2.2.2 shall be by a pipeline test with liquid as specified in NFPA 329, *Underground Leakage of Flammable and Combustible Liquids.*

4.2.2.5 If a cathodic-protection system is installed, an ongoing preventive maintenance program shall be used. Where sacrificial anodes have been installed, their proper operation shall be confirmed by a qualified person within 6 to 12 months of installation and 1 year thereafter. If these tests confirm proper operation, subsequent inspection intervals can be extended to 5 years. However, if underground work is performed at a protected site, cathodic protection should be remonitored 6 to 12 weeks after work is completed and 1 year thereafter before again extending the inspection interval. If an impressed current cathodic-protection system is installed, the operator shall verify, at least once a month, that it is operating, and a qualified person shall conduct an on-site test and inspection, at least once a year, to measure the structure-to-soil and structure-to-structure potentials and the rectifier voltage and current output.

4.2.2.6 Product line leak detectors shall be tested for proper operation on an annual basis.

4.3 Observation Wells

4.3.1 NEW FACILITIES

4.3.1.1 When more than one tank is installed, observation wells, a minimum of 2 inches in diameter, are recommended for installation at two corners within tank hole excavations. If only one tank is installed, an observation well should be installed near each end of the tank.

NOTE: Observation wells should be adequately identified to avoid confusion with product fill openings.

4.3.1.2 Observation wells shall be installed to a depth of 24 inches below the tank bottom or to the top of the concrete slab, if used for anchoring.

4.3.1.3 Observation wells shall be installed with a pipe section having 0.020-inch maximum slots with the slots extending to within approximately 12 inches of grade. This will allow detection of product leaks on a fluctuating water table and will eliminate well plugging under most soil conditions; blank well piping should extend the remainder of the distance

to grade. Observation wells should be capped and protected from traffic with a manhole and cover.

4.3.1.4 With secondary containment, only one observation well is required. This well should extend to within approximately 6 inches of the bottom of containment material and have pipe with 0.020-inch slots to 24 inches above the designed water level within the containment system.

4.3.2 EXISTING FACILITIES

4.3.2.1 Observation wells should not be arbitrarily required for existing tank installations.

4.3.2.2 Observation wells may be required where inventory controls are not maintained as recommended and a local authority required them as a result of a suspected tank failure or leakage.

4.3.2.3 Observation wells may be required where a high environmental risk exists as a result of the presence of sole-source aquifers or water reservoirs.

4.3.2.4 Observation wells, when required, should be installed in accordance with 4.3.1.1 through 4.3.1.3.

4.4 Secondary Containment

4.4.1 NEW FACILITIES

4.4.1.1 Secondary containment is recommended for new installations when sole-source aquifers are determined to need such protection or groundwater below the facility is within the cone of influence of municipal water wells. Where private potable water wells are within a minimum of 300 feet of a tank installation or hydrogeological conditions indicate that a potable water well could be contaminated by a tank leak, secondary containment is recommended.

4.4.1.2 Secondary containment should be engineered for specific site conditions using the best current engineering practices and petroleum-resistant materials.

4.4.1.3 Secondary containment for locations with water table elevations normally within the tank hole excavation should consist of an impervious barrier on the tank excavation walls. The bottom should not be enclosed with the impervious barrier because the water table will allow detection of any petroleum product leak via the observation well.

4.4.1.4 Where the water table is below the tank hole excavation, secondary containment may be accomplished by lining the tank hole. The secondary containment should be constructed to maintain a water depth to the top of the tanks and then allow excess water buildup to be discharged from the bottom of the containment area via overflow piping or other similar system. Any leaking tanks shall be readily detected by daily inventory control because the tank will be taking on water. Where feasible, the overflow water should be allowed to discharge into the ground outside the containment area, to a dry well, or to a storm drain or sanitary sewer, as appropriate.

4.4.1.5 Where required for new tank installations, secondary containment is recommended under all underground piping connected to the tank(s). The piping secondary containment shall provide for the collection and detection of any piping leak.

4.4.2 EXISTING FACILITIES

The technology for installing secondary containment for existing tanks, while they remain in place, is not sufficiently reliable or effective to be recommended or required.

1982
Uniform Fire Code

Article 79
Flammable and Combustible Liquids
Section 79.603
Corrosion Protection

Corrosion Protection

Sec. 79.603. All underground tanks and piping shall be protected from corrosive conditions by any of the following methods:

(a) Through the use of an engineered, properly installed and maintained cathodic protection system.

(b) Approved corrosion-resistant materials of construction such as special alloys, nonmetallics, reinforced plastic coatings, composites or equivalent systems.

If conditions, based on adequate proof, actually warrant the deletion of the corrosion protection requirements, the chief may waive the corrosion protection requirements.

Pub. No. 12-PE-11009-A Litho in U.S.A. May 1984 Owens-Corning Fiberglas Corp., Fiberglas Tower, Toledo, OH 43659

INSTALLATION OF CORROSION PROTECTED TANKS

Check tank installation instructions and require compliance. The manufacturer's detailed installation instructions should be available and in use by the contractor at the site. Make sure these instructions are being followed completely and correctly. The following are excerpts from tank manufacturers' installation instructions which we feel deserve special attention.

CATHODICALLY PROTECTED STEEL TANKS

1. Galvanic protection

(a) Be sure the tank is clean of all dirt clods and foreign matter which might hide scratches. Insist on repair to damaged coatings. If possible, the contractor should use the same coating material and application technique as were used originally.

(b) Be sure installers lift and lower tanks carefully so there will be no damage to the tank.

(c) Check anode lead wire attachments to the tank after the tank is placed in the hole.

(d) Check to see that back-fill is placed carefully around the tank to avoid damage to the coating, especially in the areas where tamping of back-fill is required (around the bottom and lower sides of the tank).

(e) Make sure that the dielectric bushings are left in the tank fittings so that they will do their intended job by electrically isolating the tank from piping and from other tanks on the site. Installers must be careful not to "cross-thread" or otherwise damage these non-metallic bushings.

(f) Make sure a means of monitoring the tank's cathodic protection system is installed so that periodic maintenance may be performed.

2. Impressed current protection

(a) A qualified person should supervise installation and make arrangements for monitoring and maintenance checks.

(b) Monitoring system to ensure proper operation should be checked after six weeks, and annually thereafter.

FIBERGLASS TANKS

(a) Be sure installers lift and lower tanks carefully so there will be no damage to the tank.

(b) Check to see that back-fill is placed carefully around the tank to avoid damage, especially in the "5 o'clock" to "7 o'clock" area, to ensure that the tank is fully and evenly supported (around the lower and bottom sides of the tank). Back-fill must be pea gravel, stone or gravel crushings.

(c) No additional corrosion protection devices or systems are required. No maintenance equipment is required.

FIBERGLASS COATED STEEL TANKS

(a) The integrity of the coating should be verified by an on-site spark test; this test should be performed or witnessed by a qualified person. NOTE: A perfect coating is critical. Corrosion can occur rapidly wherever there are scratches, pinholes or "holidays" in the coating.

(b) Be sure care is used in placing the tank in the hole and that back-fill is carefully placed to avoid coating damage.

VERIFICATION OF CORROSION PROTECTION SYSTEMS

Ask the owner of the tank(s) how the performance of the corrosion protection system will be checked after the tank, piping, and equipment has been completely installed.

STEEL TANKS

(a) *Galvanic cathodic protection system*
The proper operation of cathodic protection system should be verified by a NACE-accredited corrosion specialist or engineer—not the installer of the system—between six and twelve months after installation.
(b) *Impressed current cathodic protection system*
Proper functioning of the system should be verified by a qualified corrosion specialist promptly after installation is completed.

CORROSION RESISTANT MATERIALS OF CONSTRUCTION

(a) Fiberglas tanks (non-metallic): No verification is required. No corrosion protection devices or systems are needed.

(b) Fiberglass coated steel tanks: No corrosion protection devices are required by the code at this time.

WHAT CORROSION RESISTANT MATERIALS ARE ALLOWED

The following alternatives are included:

(a) Special alloys (such as stainless steel).

(b) Fiberglass (also referred to as "non-metallic").

(c) Fiberglass coatings (usually applied to a steel tank).

(d) Equivalent approved systems (this allows for new products. They should be listed by a nationally recognized lab).

SPECIAL CASES WHERE WAIVER OF CORROSION PROTECTION IS REQUESTED

Both NFPA 30-1984 and UFC-1982 allow the local authority to waive corrosion protection requirements when evidence is provided that corrosion protection is not required. This evidence should be supplied by a qualified person. A detailed analysis of the site is required; this analysis should include:

(a) A determination of the corrosive nature of the soil. This includes soil resistivity, moisture content, acidity (pH), presence of sulfides, water table level and drainage.

(b) Testing for bi-metallic and galvanic cells. These are created by contact between dissimilar metals, like copper to steel, or galvanized pipe to a steel tank.

(c) Checking for stray electrical currents in the soil. These can be caused by welding shops, rail transit lines, underground power lines, or nearby cathodic protection systems.

TYPES OF CORROSION PROTECTION

Check proposed tanks and equipment for code compliance. All tanks should be corrosion protected and listed by a nationally recognized lab. Here's what NFPA 30-1984 requires:

STEEL TANKS AND PIPE

These must be cathodically protected in accordance with recognized standards of design, such as:

(a) American Petroleum Institute (API) 1632-1983, " Cathodic Protection of Underground Petroleum Storage Tanks and Piping Systems."

(b) Underwriters Laboratories of Canada (ULC) 603.1-M.1982, "Standard for Galvanic Corrosion Protection Systems for Steel Underground Tanks for Flammable and Combustible Liquids."

(c) Steel Tank Institute Standard No. Sti-P_3®, "Specification for Sti-P_3 System of Corrosion Protection of Underground Steel Storage Tanks – 1983."

(d) National Association of Corrosion Engineers (NACE) Standard RP-01-69 (1983 revision), "Recommended Practice – Control of External Corrosion of Underground or Submerged Metallic Piping Systems."

MAINTENANCE

Review provisions for periodic maintenance with owner of the tank(s).

MAINTENANCE OF CATHODICALLY PROTECTED STEEL TANKS

Cathodic protection of steel is an electrical system which requires periodic preventive maintenance.

(a) Sacrificial anode systems: These require an annual check to assure continuing performance and a permanent record of each inspection. Anodes will have to be replaced when sacrificed since the tank would then become an unprotected steel tank.

(b) Impressed current systems. These require a monthly check that rectifier is working and the system is in code compliance.

MAINTENANCE OF FIBERGLASS TANKS

(a) No maintenance is required.

MAINTENANCE OF FIBERGLASS COATED STEEL TANKS

(a) No maintenance is required by the code at this time.

How you can help solve the problem

The new code won't stop old tanks from leaking but with your involvement new corrosion protected tanks will be properly installed and future leaks will be prevented.

This folder has been prepared to help fire marshals and code officials inspect new underground fuel tanks. It includes excerpts from NFPA-30, American Petroleum Institute Publications 1615 and 1632, tank manufacturers installation instructions, and comments regarding corrosion protection practices which Owens-Corning believes to be important.

The folder is not intended to take the place of tank manufacturers' comprehensive installation instructions, which should always be available and in use by the installation contractor at the job site.

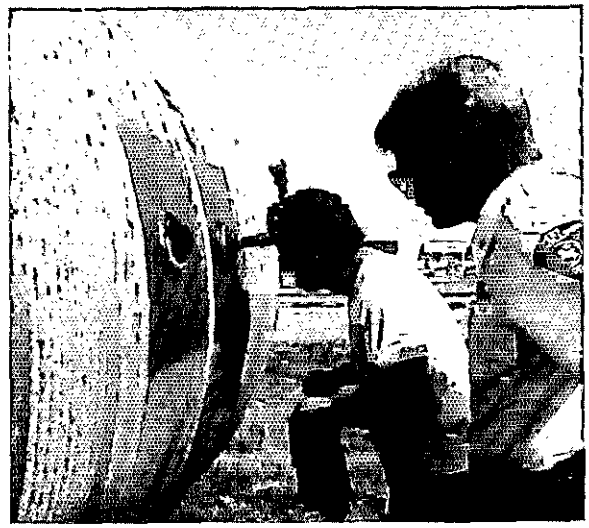

Why careful inspection of underground fuel storage tanks is of importance to you and your community

"Somewhere in the United States, an underground gasoline or oil tank began leaking today. The same thing happened yesterday. It'll happen again tomorrow. And the day after."

—National Petroleum News, July 1982.

It's become a serious national problem. Reports of leaking gasoline tanks posing serious fire hazards or polluting ground water supplies have become common. Federal legislation has been proposed and EPA regulations are being studied.

Corrosion is the most common reason underground tanks fail.

The American Petroleum Institute's three-year study found that corrosion is the major reason underground tanks fail. Industry experts agree.

Now, NFPA requires *corrosion protection.*

In May, 1984 the National Fire Protection Association adopted a revision to its Pamphlet 30, Flammable and Combustible Liquids Code. This revision calls for "all new underground fuel tanks and pipes to be corrosion protected" unless evidence is provided that corrosion protection isn't needed. (The 1982 Uniform Fire Code contains similar wording.)

SUMMARY

Proper installation is critical to the performance of all tanks and corrosion protection systems. Insist on complete compliance with manufacturers' installation instructions. The manufacturers' instructions are often attached to the tank. More information on proper installation of underground petroleum storage systems is available from:

The American Petroleum Institute
2101 L Street, N.W.
Washington, DC 20037

Owens-Corning Fiberglas Corporation Underground Fuel Storage Tank Sales Offices

Atlanta, Georgia 30328
1155 Hammond Drive
Building C, Suite 3210
(404) 956-1465

Braintree, Massachusetts 02184
25 Braintree Hill Park, Suite 305
(617) 849-1340

Cleveland, Ohio 44129
5700 Pearl Rd., Suite 104
(216) 884-9440

Dallas, Texas 75230
12880 Hillcrest, Suite 100
(214) 233-9241

Greenbelt, Maryland 20770
9111 Edmonston Rd., Suite 401
(301) 345-7300

Houston, Texas 77060
256 North Belt East, Suite 100
(713) 445-6100

Los Angeles, California 90040
5933 Telegraph Road
(213) 724-5383

Ft. Lauderdale, Florida 33068
541 South 441, Suite 3
(305) 975-6700

Northbrook, Illinois 60062
2215 Sanders Road
(312) 480-4300

Overland Park, Kansas 66210
55 Corporate Woods, Suite 200
9300 W. 110th Street
(913) 341-9100

Scarsdale, New York 10583
700 White Plains Road
(914) 472-3900

South San Francisco, California 94080
477 Forbes Blvd.
(415) 873-7950

Tampa, Florida 33609
4950 W. Kennedy Blvd., Suite 301
(813) 877-7516

Toledo, Ohio 43659
Fiberglas Tower OB/7
(419) 248-7000

Wayne, Pennsylvania 19087
900 W. Valley Rd., Suite 1101
(215) 688-8650

OWENS-CORNING FIBERGLAS CORPORATION
Non-Corrosive Products Division
Fiberglas Tower, Toledo, Ohio 43659

Pub. No. 5-PE-12760 Litho in USA September, 1984
Copyright ©1984, Owens-Corning Fiberglas Corporation

GUIDE FOR FIRE MARSHALS AND CODE OFFICIALS

Tips for Inspecting Underground Fuel Storage Tanks for Corrosion Protection

OWENS-CORNING FIBERGLAS CORPORATION

26-B

HS

OWENS-CORNING FIBERGLAS CORPORATION FIBERGLAS TOWER, TOLEDO, OHIO 43659, (419) 248-8000

October 22, 1984

Mr. Harold J. Singer, Water Resources Control Engineer
State of California
Division of Technical Services
901 P. Street
Sacramento, CA 95814

Subject: Section 2633 - Construction Standards for New Motor Vehicle Fuel Tanks, paragraph (b)

I have the following comment concerning the above subject portion of the underground tank regulations.

Section 2633 (b) - The materials of construction listed do not include "composite tanks". There is a UL listing for a "composite tank" and this material is included in the 1981 edition of the Uniform Fire Code as an approved corrosion resistant material of construction.

I recommend that you revise this paragraph to add the words "composite tanks" and delete the words "steel clad with glass fiber reinforced plastic".

I support this recommendation by stating that there are currently no UL listings or industry standards for "steel clad with glass fiber reinforced plastic". The type of glass, the resin, the surface preparation, the application, the thickness and the testing are all critical to the performance of these coatings. In the absence of industry standards a consistent implementation of the regulation would be difficult.

You may help expedite the preparation of industry standards for this product by removing "steel clad with glass fiber reinforced plastic" until these industry standards are made available.

I urge your consideration and acceptance of this revision to the regulation in the interest of aiding enforcement authorities to implement the regulations in a fair and consistent manner.

Replacement for teletyped copies received Oct 23 1984

Very truly yours,

Edward C. Nieshoff, Market Manager
Underground Tanks/Codes - NCPD

OCT 30 1984
Received DTS

ECN/bw
cc: Steve Fagundas-State of California; Paul Robinson - OCF

P.S. Acceptance would require deletion of the term "steel clad with fiberglass reinforced plastic" from the following paragraphs: 2633 (b); 2635 (b); 2635 (h) (2); 2642 (d); Category B; Footnote 1.

26-C

OWENS CORNING FIBERGLAS

OWENS-CORNING FIBERGLAS CORPORATION FIBERGLAS TOWER, TOLEDO, OHIO 43659, (419) 248-8000

October 22, 1984

Mr. Harold J. Singer, Water Resources Control Engineer
State of California
Division of Technical Services
901 P. Street
Sacramento, CA 94814

Subject: Underground Tank Regulations
Paragraph 2635 (h) (1)

Dear Mr. Singer,

This is a recommendation that the wording in the subject paragraph be revised as follows:

"A properly engineered, installed and maintained cathodic protection system in accordance with recognized standards of design, such as:

1) API 1632 - 1983 "Cathodic Protection of Underground Petroleum Storage Tanks and Piping Systems"

2) Underwriters Laboratory of Canada - ULC 603.1-M-1982 "Standard for Galvanic Corrosion Protection Systems for Steel Underground Tanks for Flammable and Combustible Liquids"

3) Steel Tank Institute Standard #STI-P3, "Specification for STIP3 System of Corrosion Protection of Underground Steel Storage Tanks - 1983"

4) National Association of Corrosion Engineers Standard RP-01-69 (1983 Revision) "Recommended Practice - Control of External Corrosion of Underground or Submerged Mettalic Piping Systems"

Since the maintenance of electrical systems is a difficult item to enforce I'd recommend an additional paragraph be added to this section reading as follows:

replacement for teletyped copies received Oct 23 '84

"Maintenance of the cathodic protection systems are to be performed by a California accredited corrosion engineer annually or as specified in the recommended standards. These maintenance records shall be available for inspection as needed to verify the tanks still meet industry corrosion protection standards."

I believe the adoption of these proposed revisions will strengthen the objectives of the code as well as enhance implementation of the regulations by the variety of code enforcement authorities who will be involved.

Very truly yours,

Edward C. Nieshoff, Market Manager
Underground Tanks/Codes
Non-Corrosive Products Division

ECN/bw
cc: S. Fagundas - State of California
P. Robinson - San Francisco Br./OCF

26-D

OWENS-CORNING FIBERGLAS CORPORATION FIBERGLAS TOWER, TOLEDO, OHIO 43659, (419) 248-8000

October 22, 1984

Mr. Harold J. Singer, Water Resources Control Engineer
State of California
Division of Technical Services
901 P. Street
Sacramento, CA 95814

Subject: Underground Tank Regulations
Section 2635 - General Construction Standards
Paragraph (b) (6)

Dear Mr. Singer,

I wish to submit the following comments concerning the subject section of the regulations.

The proposed paragraph (b) (6) requires that the tank be designed based on ASTM-D-4021-81 and that the tank manufacturer furnish written assurance of the chemical compatibility of the fiberglass reinforced plastic tanks with the substance to be stored. I support the objective of this part of the regulation, however this requirement should apply to all tanks regardless of their material of construction. For example, tanks made of cathodically protected steel, steel tanks clad with glass fiber reinforced plastic, or composites should also be required to furnish written assurance of their compatability with the substance to be stored. (The regulations apply to all hazardous substances. There is no one material which is suitable for the storage of all substances.)

I urge that you amend this paragraph to include all tanks, not just the fiberglass reinforced plastic tanks. One approach to this revision could be amending the existing paragraph as follows:

"Tanks shall be designed based on tests by the manufacturer for durability and chemical compatibility with the hazardous substance to be stored. The following industry standards may be used for these chemical compatibility tests.

-Fiberglass reinforced plastic - ASTM-D-4021-81 "Standard Specification for Glass-Fiber-Reinforced Polyester Underground Petroleum Storage Tanks"

Replacement for teletyped copies received Oct 23, 1984

-Cathodically protected steel, steel clad with fiberglass reinforced plastic and compsites -

.ASTM G-1-72 "Standard Recommended Practice for Preparing, Cleaning and Evaluating Corrosion Test Specimens".

.ASTM G-31-72 "Standard Recommended Practice for Laboratory Immersion Corrosion Testing of Metals".

.NACE TM-01-69 "Laboratory Corrosion Testing of Metals for the Processing Industry".

.NACE TM-02-70 "Method of Conducting Controlled Velocity Laborarory Corrosion Tests".

The manufacturer shall provide the owner with written assurance of the compatibility."

Thank you for reviewing and considering this comment which I believe to be critical to the objectives or your regulations.

Very truly yours,

Edward C. Nieshoff, Market Manager
Underground Tanks/Codes
Non-Corrosive Products Division

ECN/bw

cc: Steve Fagundas - State of California
Paul Robinson - OCF/San Francisco Br.

26-E

OWENS/CORNING FIBERGLAS

OWENS-CORNING FIBERGLAS CORPORATION FIBERGLAS TOWER, TOLEDO, OHIO 43659, (419) 248-8000

October 22, 1984

Mr. Steve Fagundas, Water Resources Control Engineer
State of California
Division of Technical Services
901 P. Street
Sacramento, CA 95814

Subject: Underground Tank Regulations - General

Dear Steve,

When we met last week I told you I would send some additional information that may be helpful.

1) "Tank Bottom Protector for Retrofitting Steel and Fiberglass Tanks"

   We discussed the thickness of the steel wear plate under all accessible openings of the underground tank. This information refers to an Owens-Corning product designed for retrofitting existing tankage. There are a number of other manufacturers who offer similar equipment.

2) Paragraph 2635 (b) (5) shows the Underwriters Laboratory of Canada standard for reinforced plastic tanks as standard ULC-5613-1977. My copy is hard to read but, the proper designation for this should be ULC-S615-1977.

3) A review of our field service records confirms what we discussed concerning Fiberglas tank in-ground problems. Almost 100% of the problems occur within the first six months of tank installation. Problems occuring after this period are normally related to mechanical abuse such as dipstick puncture of the tank.

   Proper installation is critical to the performance of both fiberglass and steel tanks. I am attaching a copy of an installation checklist used by several of our customers to assure installation according to our instructions. Both the fiberglass tank industry as well as the Steel Tank Institute have similar installation requirements. A regulation calling for the submittal of an installation checklist could upgrade the installation practices of the underground tank industry. Its possible that the Steel Tank Institute would support this recommendation.

I'll look forward to talking with you after your October 23, public hearing. Please consider me a source for information concerning fiberglass reinforced plastics as well as code activities in other states.

Very truly yours,

Edward C. Nieshoff, Market Manager
Underground Tanks/Codes
Non-Corrosive Products Division

ECN/bw
Attachments
cc: H. J. Singer - State of California
P. A. Robinson - OCF/San Francisco Br.
R. T. Lawrence - Los Angeles Br.

Tank Bottom Protector
For Retrofitting Steel and Fiber Glass Tanks

Stop Tank Dipstick Damage

A recent survey conducted by the American Petroleum Institute found that a significant percentage of underground fuel storage tanks develop leaks directly beneath fill tubes. A fill tube guides a tank dipstick (used to measure the liquid level in a tank) to the same tank bottom location each time the tank is gauged. Frequent gauging with dipsticks (metal or wooden) of tanks without tank bottom protection under fill tubes can cause tank damage leading to serious leaks.

Steel Tank Protection

The measuring of liquid levels in old and new steel tanks, with daily dipstick usage impacts on tank bottoms, exposes the steel to a concentrated corrosion attack. Eventually, the tank will develop a hole at this location. The Owens-Corning Tank Bottom Protector shields the steel tank bottom from direct dipstick impact damage.

Fiber Glass Tank Protection

Some earlier production glass fiber reinforced-plastic tanks are not protected against dipstick damage, or the fill tube may be located at an opening without protection against dipstick damage.
Without protection, a dipstick repeatedly and carelessly dropped in a tank can puncture the tank bottom resulting in a leak. A Tank Bottom Protector, installed by lowering it through the fill tube, eliminates this potential problem.

New Tank Protection

The Tank Bottom Protector offers the additional benefit of complete piping location flexibility in the field because any opening can be used for gauging. Simply select the fill opening and lower the dipstick protector. No need to buy multiple protector plates in the hope that one of the plates will be located beneath the fill tube.

Sizes

The Tank Bottom Protector is available in two diameters: 2-5/8″ and 3-5/8″ for 3″ and 4″ drop tubes, respectively.

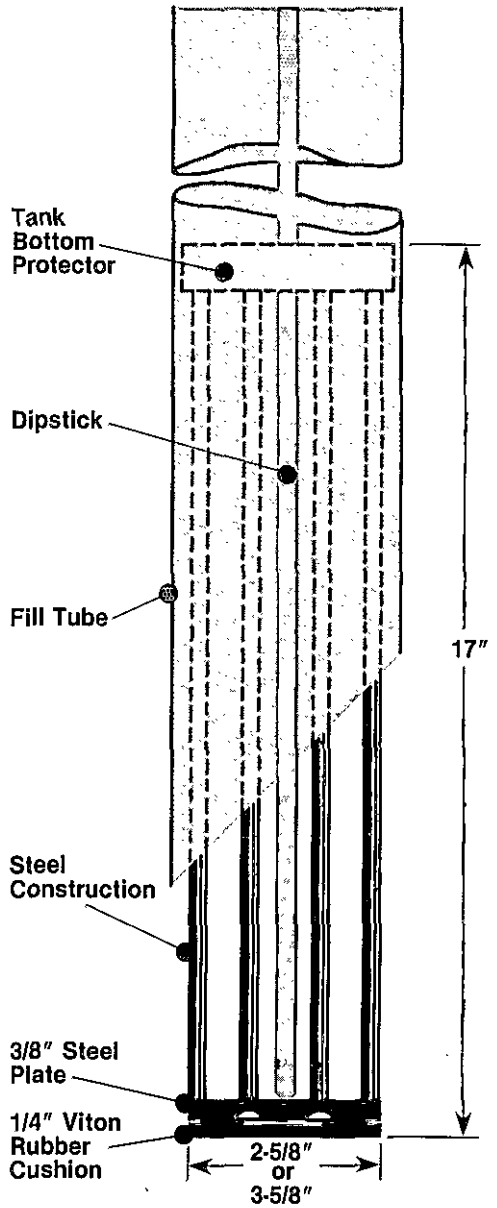

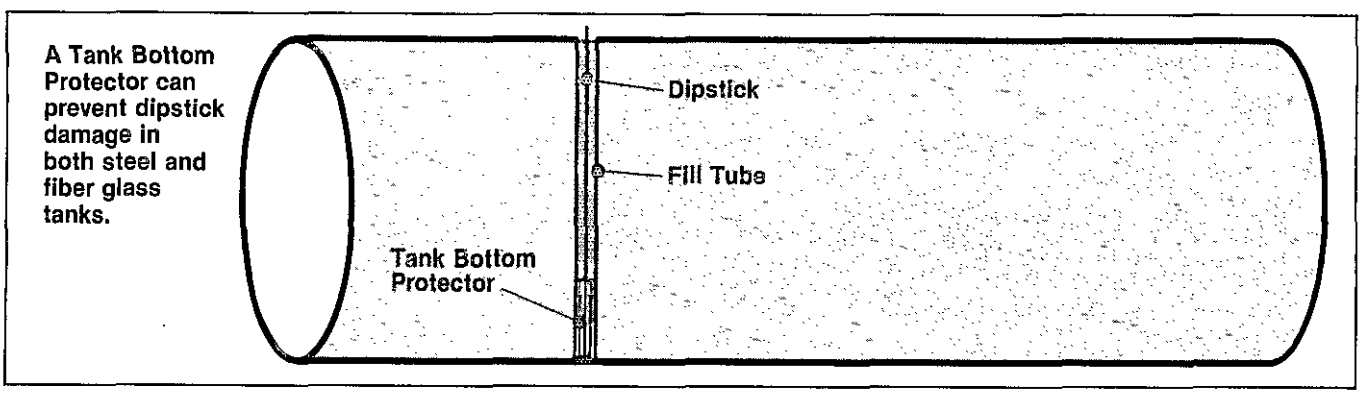

A Tank Bottom Protector can prevent dipstick damage in both steel and fiber glass tanks.

Installation and Retrieval of Tank Bottom Protector

Installation

When shipped with a new Fiberglas* tank, the Tank Bottom Protector is attached to the underside of the PVC red vented plug. The contractor must remove the plug and the Tank Bottom Protector from the tank to perform the tank air test.

After piping is completed and the fill tube is in place, lower the Tank Bottom Protector down through the fill tube. This is done by driving a nail into the end of a wooden dipstick and hooking the nail under the collar of the Tank Bottom Protector. Lower the unit to the bottom of the tank, unhook the nail, and remove the dipstick.

Note: The fill tube must extend to within 4" to 8" of the tank bottom. When retrofitting tanks, the length of the fill tube must be confirmed and must extend to within 4" to 8" of the tank bottom.

Removal

To remove the Tank Bottom Protector, drive a nail into the end of a wooden dipstick and lower it to the tank bottom. Begin slowly to remove the dipstick until the nail catches on the collar of the Tank Bottom Protector. Continue removing the dipstick, bringing the Tank Bottom Protector out with it for complete removal.

Call today for additional information or help with your specifications

Atlanta, Georgia 30328
1155 Hammond Drive
Building C, Suite 3210
(404) 393-8585

Cleveland, Ohio 44129
5700 Pearl Rd., Suite 104
(216) 884-9440

Dallas, Texas 75230
12830 Hillcrest, Suite 216
(214) 233-9241

Greenbelt, Maryland 20770
9111 Edmonston Rd., Suite 401
(301) 345-7300

Houston, Texas 77060
256 North Belt East, Suite 100
(713) 445-6100

Los Angeles, California 90040
5933 Telegraph Road
(213) 724-5383

N. Miami Beach, Florida 33179
470 N.E. 185th St.
(305) 651-2113

New York, New York 10022
717 Fifth Avenue
(212) 759-3810

Northbrook, Illinois 60062
2215 Sanders Road
(312) 480-4300

Overland Park, Kansas 66210
55 Corporate Woods, Suite 200
9300 W. 110th Street
(913) 341-9100

Scarsdale, New York 10583
700 White Plains Road
(914) 472-3900

South San Francisco
California 94080
477 Forbes Blvd.
(415) 873-7950

Tampa, Florida 33609
4950 W. Kennedy Blvd., Suite 301
(813) 877-7516

Toledo, Ohio 43659
Fiberglas Tower
(419) 248-7000

Wellesley Hills,
Massachusetts 02181
60 Williams Street
(617) 235-7540

OWENS/CORNING FIBERGLAS TRADEMARK

OWENS-CORNING FIBERGLAS CORPORATION
Non-Corrosive Products Division
Fiberglas Tower, Toledo, Ohio 43659

*Reg. TM Owens-Corning Fiberglas Corporation

Pub. No. 1-PE-10849-A Litho In U.S.A. January, 1982

Copyright © 1982 by Owens-Corning Fiberglas Corp.

HS

26-F

OWENS-CORNING FIBERGLAS CORPORATION FIBERGLAS TOWER, TOLEDO, OHIO 43659, (419) 248-8000

January 17, 1985

State Water Resources Control Board
Division of Water Quality
P. O. Box 100
Sacramento, CA 95801-0100

Attention: Mr. Micheal A. Campos, Executive Director

Dear Mr. Campos,

Subject: Regulations Governing Underground Storage of Hazardous Substances-
Comment Concerning Article 6 - Allowable Repairs
2661 Repair Evaluation Paragraph "A"

Thank you for the opportunity to comment on the subject proposed regulations.

Through some mix up I did not receive a copy of the December 28, 1984 draft, however I understand the regulation includes a comment stating that when fiberglass reinforced plastic tanks have deflected in excess of 1% the tank may not be repaired.

I wish to comment as follows:

The maximum vertical deflection of an installed fiberglass reinforced plastic tank should not be in excess of 2% of the original tank diameter anywhere along its length. This 2% allowable deflection has been used in the industry for many years and is recognized by all the major fiberglass underground storage tank manufacturers as being the correct allowable deflection.

In addition to the fiberglass tank industry, it should be noted that steel tank fabricators are also concerned when vertical deflection exceeds 2%.

Please accept this comment as a minor revision to your regulation.

Very truly yours,

Edward C. Nieshoff

Edward C. Nieshoff, Market Manager
Underground Tanks
Non-Corrosive Products Division

ECN/bw

Received DTS
JAN 18 1985

Subchapter 16
#27

HS

Boise Cascade

Building Materials Center
Poway

13137 Poway Road
Poway, California 92064
(714) 278-2141

October 5, 1984

Mr. Harold Singer
State Water Resources Control Board
Division of Technical Services
P.O. Box 100
Sacramento, CA 95801

Dear Mr. Singer:

While the reasons for the proposed rulemaking are admirable, the administrative costs would seem to outweigh the cleanup costs of several serious spills in a given time period, nor would these rules serve to discourage intentional spillage.

A more cost effective approach might be to license fuel storage facilities locally, setting aside a portion of said fees in a state maintained interest bearing account to cover any necessary cleanups. Negligence spills would also be aided by fines levied.

Inspections and licensing could be handled on a local level utilizing guidelines set by the state; local costs covered by the other portion of the license cost. Locally, the Fire Marshall or Building Inspector could oversee inspections and licensing and local level enforcement. This level inspection and enforcement backed up by a Regional State Office.

Respectfully,

Bill Williams

Bill Williams
Yard Supervisor

BW/maa

Received DTS
OCT 19 1984

Quality Materials To Do It Right."

27B

HS

General Offices

One Jefferson Square
Boise, Idaho 83728
(208) 384-6161
Cable: BOCASCO

Boise Cascade Corporation

October 19, 1984

State Water Resources Board
P.O. Box 100
Sacramento, CA 95801

Attention: Harold Singer
Division of Technical Services

Dear Mr. Singer:

Boise Cascade Corporation is a fully integrated forest products company with operations in over 30 states and Canada. Several of our facilities are located in California, and we have an interest in the rules currently proposed for regulating underground storage tanks.

Boise Cascade agrees that protection of groundwater resources is an important subject, and that a regulatory program to prevent leaking tanks from causing groundwater problems is a key element of this protective effort; however, we are concerned that the current proposals would require an unnecessary and costly step for the majority of underground tank owners. If an existing underground tank has never leaked, immediate placement of the proposed monitoring system would show nothing -- at least regarding impacts from this tank. On the other hand, an adjacent property owner's tank may have a history of leaking, and the "clean" property owner could very well become unnecessarily entangled in an extensive investigation of a problem that he had no hand in causing.

We believe an effective and acceptable tank regulation program can be developed along the following lines:

1. Rigorous leak detection program -- a routine program of regular testing of tank integrity, visual inspections, careful inventory checking, and record keeping should be implemented. If a "no problem" situation is documented, groundwater monitoring should not be necessary.

Received DTS

OCT 22 1984

2. New tank standards -- as new tanks are installed, or existing tanks are replaced, all reasonable precautions should be included. Improved leak detection principles, such as double-walled tanks or subsurface bunkers to contain tanks, could be incorporated without the need for monitoring wells.

3. Leaking tanks -- if a leaking tank is identified, then the owner should be required to implement an adequate monitoring program designed to appropriately deal with the problem.

Thank you for this opportunity to comment on the proposed California program. Please add my name to the mailing list for information on this subject.

Sincerely,

Richard H. Nachbar

Richard H. Nachbar, Manager
Environmental Affairs

RHN/mm

Subchapter 16
#28 HS

KERR-McGEE CHEMICAL CORPORATION
TRONA, CALIFORNIA 93562

October 9, 1984

County Government Center
385 N. Arrowhead Avenue
San Bernardino, CA 92415

Attn: Mr. John Joyner
First District Supervisor

Dear Mr. Joyner:

Re: Underground Storage of Hazardous Substances
Ordinance No. 2819 Versus SWRCB Draft Regulations

Kerr-McGee Chemical Corporation wishes to express concern regarding Subchapter 16, Article 1, Section 2611(a)(1)(A), (B), and (C) of the SWRCB draft regulations, and its impact on local jurisdiction.

AB 1362 exempts cities and counties which have enacted ordinances before January 1, 1984, if the ordinances provide, at least, for double containment and monitoring of the storage tanks, and also issues permits under the ordinance.

However, the SWRCB draft regulations state that the County shall be exempt from the provisions of Subchapter 16 if the ordinance, at a minimum, meets the requirements of Articles 3 and 4. This provision is inconsistent with the intent of the law. For the County to have local jurisdiction, the ordinance must be as stringent as the law, not the SWRCB regulations.

Therefore, we are concerned that if Article 1, Section 2611(a)(1)(A), (B), and (C) is not revamped by SWRCB staff, the County will lose the local jurisdiction to administer the adopted ordinance.

The intent of AB 1362 was to establish the provisions of the Santa Clara County underground storage tank ordinance as the minimum State requirements. The provisions of the law are of State-wide interest and concern, and should not be construed as having authority to preempt the County ordinance.

Generally, the SWRCB regulations far exceed the intent and the authority granted under AB 1362.

The County ordinance is more stringent than the law, and more importantly, it provides flexibility to accomplish the overall objective, which is to protect public health, property, and resources of the people of the State.

Received DIS
OCT 19 1984

The extensive monitoring requirements of the SWRCB exceed those necessary to monitor an underground storage tank; e.g., three wells to a depth of 200 feet and continuous vadose monitoring, which are neither practical nor economical.

We believe the County should retain the exclusive jurisdiction of enforcing its ordinance, and we encourage your support of this position.

Very truly yours,

J. A. Smith
Manager of Administration

ASC/llh

cc: R. B. Rigney, County Administrative Officer
P. Brierty, R.S., Department of Environmental Health Services
State Water Resources Control Board
Office of Administrative Law
R. L. Davis, Chemical Industry Council of California

Subchapter 16 #29 HS

KRAZAN & ASSOCIATES

Environmental Field Testing and Sampling
Specialized Fuel Seepage Studies
Laboratory Soils Testing
Soils Engineering
Geotechnical Investigations

October 10, 1984

Mr. Harold Singer
Division of Technical Services
California Water Resources Control Board
P. O. Box 100
Sacramento, CA 95801

RE: Comments Suggesting Amendments or Modification to Subchapter 16, Regulations for Storage of Hazardous Substances

Dear Mr. Singer:

Monday, September 17, 1984, I attended the informal consultant/equipment supplier workshop addressing the above-referenced draft regulations. I found the subject matter discussion and the development philosophy behind specific regulation sections most informative.

In general, I believe the draft guidelines favor a corrective philosophy to the underground tank program. Personally, I believe such an approach shall be difficult and, to a certain degree, self-defeating. I believe the primary thrust of guideline implementation should be on preventive measures (i.e., new tank installation, testing for current tank integrity). In the following comments, I shall discuss how additional preventive and corrective safeguards may be amended to the draft guidelines as written:

1. Article 3, Section 2631(f) - During the workshop, I commented on the need for ample volumetric pore space surrounding product piping systems between primary and secondary containers. My reasoning for this provision is based upon two premises: (1) It has been our experience that a large percentage of tanks are "product tight", and most major leaks result from the product piping network. (2) Product lines are usually under "positive pressure" ;therefore, a leaking product line will produce more product release (on a per volume basis) than a storage tank.

Received HS
OCT 15 1984

In short, a specified percentage of volumetric pore space surrounding the primary container should be established for the product piping network. Establishing such pore space requirements should consider that the system is usually under significant positive pressure.

2. Article 4, Section 2644(c) - During the workshop, the probability of plume detection by both one slant or one vertical boring was discussed. The discussion terminated in a manner such that neither drilling method advocate could cite definitive evidence in support of the drilling method which would most accurately intercept the plume. Upon culmination of this exchange, it was mentioned that selecting the appropriate drilling technique became a judgment call.

I don't perceive the choice between one slant boring and one vertical boring as a judgment call. I perceive the probability of a slant boring versus the probability of a vertical boring intercepting the contaminant plume as a judgment call. If both methods have equal probability of intercepting the plume, the ramifications of each method upon the consulting firm and clientele must be evaluated. Thus, I believe a vertical boring is definitely a more realistic approach.

3. Article 4, Section 2644(c) - As an option to the slant boring requirement, I suggest that the local agency determine which drilling method (one slant boring or one vertical boring) is more feasible. This option allows flexibility of local entities to consider local geologic features which may not be conducive to slant drilling.

4. Article 4, Section 2644(d) - This section fails to address the need for sampling in the product line and product line/tank union areas. As previously mentioned, our firm has experienced that an overwhelming percentage of leaks at tank facilities occur in the product line system. A sampling grid should be developed to address the aforementioned occurrence in order to detect historical unauthorized releases.

I shall suggest the following sampling scheme. Drill 2 borings in the tank vicinity. One boring would be drilled on the most accessible long dimensional side of the tank. An additional boring would be placed near the product line/tank union. The product line tank union is an area in which past product seepage is fairly probable.

In order to determine whether or not past leakage has occurred from the tank facility, a product piping sampling program should be implemented. Such a sampling regime may resemble the text set forth in Article 7, Section 2672(d) 1.

I appreciate the opportunity to comment on the proposed draft guidelines, and I'm open to feedback on your part. If you have any questions regarding the text of these comments, feel free to contact me.

Sincerely,
KRAZAN & ASSOCIATES

Frank L. Horat

Frank Horat
Environmental Specialist

FH/rv

#21b

W.U.
225 SWBDWY
PTLD OR 97205 23AM

Western Union Mailgram®

UNITED STATES POSTAL SERVICE U.S. MAIL

1-002769A143 05/23/85 ICS IPMPTUH PTL SACA
03041 MGM PORTLAND OR 05-23 0356A PDT PTUG

#21b
DH

DAVID HOLTRY
STATE WATER RESOURCE CONTROL BOARD
PO BOX 100
SACRAMENTO CA 95801

1-056389G143 05/23/85
ICS IPMIIHA IISS
IISS F M RCA 23 0547
PMS SACRAMENTO CA
WUB7695 GGA0276 DP2911C242
URIX CO DPKI 065
KIEL/TLX NEUMUENSTER 65/55 23 1135 PAGE 1/50
DABXXXX
DAVID HOLTRY
STATE WATER CXXXX RESOURCE CONTROL BOARD P.O. BOX 100
SACRAMENTOR/CALIFORNIA/95801
REFERENCE: TITLE 3 SUBCHAPTER 14 SECTION 2621
NOTIFICATION A REQUESTED IN ISSUE JAXXXX MAY 14. KINDLY ADD
TO LIST OF NATIONALLY RECOGNISED INDEPENDENT TESTIN
ORGANISATIONS : T.UE.V. WEST-GERMANY (TECHNISCHER
UEBERWAGUNXXXX UEBERWACHUNGSVEREIN- EQUIVALENT OXXX TO U.L.)
REGARDS KURT HENNIGHAUSEN HAASE-TANK GMBH GADELANDER STR.
COL 1000
SACRAMENTO/CALIFORNIA/95801 3 14 2621 14.
HLXXXX HOLTRY SACRAMENTO PAGE 2/05
172 D-2350NEUXXXX D-2350 NEUMUENSTER/ WEST GERMANY
COL 172 D-2350
NNN
0555 EST

06:08 EST

MGMCOMP

Received DTS
MAY 24 1985

5241 (R 7/82)

TO REPLY BY MAILGRAM MESSAGE, SEE REVERSE SIDE FOR WESTERN UNION'S TOLL - FREE PHONE NUMBERS

TO REPLY BY MAILGRAM MESSAGE, PHONE WESTERN UNION ANYTIME DAY OR NIGHT

FOR YOUR LOCAL NUMBER SEE THE WHITE PAGES

OF YOUR LOCAL TELEPHONE DIRECTORY

OR

DIAL (TOLL-FREE) 800 325-6000

OR DIAL WESTERN UNION'S COMPUTER DIRECTLY

FROM TELEX I..... 6161 FROM TELEX II (TWX) 910-420-1212

Subchapter 16
#30

HS

MERCEDES-BENZ
SERVICE and PARTS MANAGERS CLUB
LOS ANGELES ZONE CHAPTER

October 11, 1984

State Water Resources Control Board
PO Box 100
Sacramento, Ca. 95801

ATTN:Harold Singer, Division of Technical Services

Re:Subchapter 16 of Chapter 3, Title 23, Cal. Admin. Code

Dear Mr. Singer;

Please present our statement at the public hearing of proposed rule-making on October 23, 1984.

This Mercedes-Benz managers organization is concerned about the adverse impact of proposed regulations governing the storage of hazardous substances. We recognize the need for responsible storage and monitoring of all materials. There are, however, instances where regulations are adopted and applied to situations where adequate controls are already in place and/or where not applicable at all.

The spirit of the regulation most directly applies to the automobile dealer's underground storage of motor oil and fuel. These materials are rapidly used, replenished and inventoried on a regular basis. Simple cost control and profit motive provide all the reasons to repair any leakage of these products. Elaborate electronic inventory monotoring systems should not be considered for this application. A manual inventory recording and reporting system will prove to be simple, cost effective and adequate.

Another category of underground storage tanks should be exempted. These are small hydraulic oil reservoirs used in conjunction with automobile lifting equipment. Every "inground" hydraulic hoist has a 30 to 50 gallon tank to hold the operating oil. A small shortage of oil, i.e. 4 to 5 gallons, will disable the lift and render it unproductive. Naturally, the repair will be affected as soon as possible to return the equipment to operating order. We strongly urge that these tanks be exempted from liscensing fees and hazardous materials storage controls.

Received DTS
OCT 15 1984

Sincerely,

Rick Blakemore
President

Original Comments 31-40

LLOYD PEST CONTROL

"GETTING THE BUGS OUT SINCE 1931."

MAIN OFFICE
935 SHERMAN ST.
SAN DIEGO, CA 92110
(714) 298-9865

Subchapter 16
#31

HS

October 11, 1984

State Water Resources Control Board
P. O. Box 100
Sacramento, California 95801

Attention: Harold Singer,
Division of Technical Services

Dear Mr. Singer:

I am an entomologist who manages a large pest control company in San Diego. As an entomologist I have a clear understanding between chemical impact and environmental change. Definitely the idea of protecting our underground water supply sounds environmentally sound. But just as definitely what is being proposed is a financial impact that will be devastating to every small businessman in California.

Using the table provided in your draft the possible initial costs per tank may be approximately $9220.00. Our company has 6 tanks located at various locations and this could result in a cost of $55,320.00. Are you proposing that we forget the fifty years it took to build this firm and invest (which is close to our annual pre-tax profit) an enormous sum on gas tanks that were legal and supposedly safe when they were installed?

Wouldn't it be more fair to businesses, that when properties are sold that a requirement would be to bring those tanks up to the new requirements? This would spread the costs from the business sector over a more reasonable period of time, and still accomplish this important task. Another avenue might be that companies which have multiple tank sites be allowed to defer monitoring equipment over a ten year period and/or if property is sold to allow the costs to be spread out over a more realistic time frame.

Again, I understand your position in proposing this legislation, but remember that the devastating impact that this draft will have will cause stress on the small businessman who has just survived one of the worst recessions in the past fifty years.

Sincerely,

Herbert C. Field

Herbert C. Field
Operations Manager/
Entomologist

HCF/cn

Received DTS
OCT 15 1984

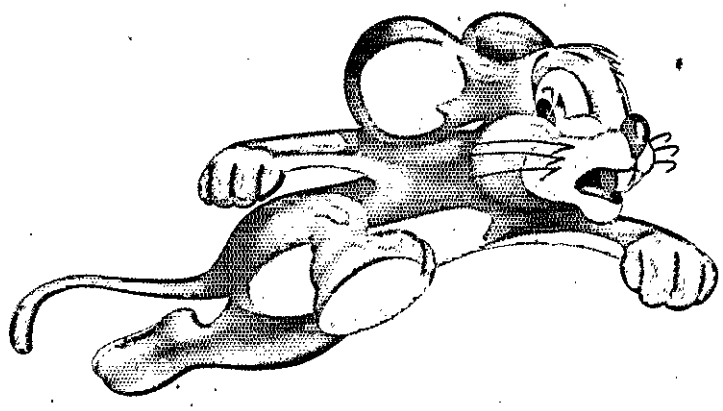

Subchapter 16
#32

HS

San Diego Petroleum Corp. Chevron
2351 E. Harbor Dr.
San Diego, Calif. 92113
234-5111

October 11, 1984

Mr. Harold Singer
State Water Resources
Control Board
P.O. Box 100
Sacramento, Ca 95801

Re: Underground Storage Tank Monitoring Regulations

Dear Mr. Singer,

We would like to add our voice to the many who are concerned with maintaining a safe and clean environment. We are, however, of the opinion that there is some middle ground in regard to the above subject matter. As presently presented, the proposed monitoring procedures appear to be cost prohibitive and in some cases a duplication of effort. Your restraint and further study regarding these proposed regulations is requested.

Sincerely,

Tim DeWan

Tim DeWan

cc: C.M. Riley

OCT 15 1984

Subchapter 16 HS
#33

WEDCO

STINNES-WESTERN CHEMICAL CORPORATION

SOCO

CHEMICALS DISTRIBUTION

3270 East Washington Blvd. • Los Angeles, California 90023 • (213) 269-0191 • Telex: 686-127

FRED W. CLUFF
President

October 11, 1984

State Water Resources Control Board
P.O. Box 100
Sacramento, CA. 95801

Attn: Harold Singer
Division of Technical Services

Dear Sir:

It is my understanding that you are holding a hearing on October 23rd in Sacramento to consider the adoption of certain proposed regulations governing underground storage tanks handling hazardous materials.

I would urge the board to consider very carefully the regulations that have been proposed. It would seem to place an extreme economic burden on those of us who have existing tanks and apparently goes beyond what might be necessary to assure that there is not contamination of ground water supplies.

We can make the monitoring rules so extreme that it can become an extreme burden on the tax payer and ultimate customer product. All of us are interested in preserving the quality of the water that we must some day drink but it certainly must be done on some kind of a reasonable basis. I would think that there are historical records of tanks that have been used in certain areas that would give an indication on the longevity of tanks and certain kinds of applications.

I think before we rush out and place some law on the books that create an extreme financial burden we should give every thought to testing to obtain the results that we need and the most economical way that we can achieve that goal.

Your consideration in this matter shall be appreciated.

Very truly yours,
STINNES-WESTERN CHEMICAL CORPORATION

Fred W. Cluff

Fred W. Cluff

Received DTS
OCT 15 1984

/bl

Subchapter 16 #34 HS

State of California

Business and Transportation Agency

Memorandum

To : State Water Resources Control Board
Division of Technical Services
P. O. Box 100
Sacramento, CA 95801

Attn Harold Singer

Date: October 12, 1984

File : 816
878

From : DEPARTMENT OF TRANSPORTATION
DIVISION OF PROJECT DEVELOPMENT
OFFICE OF STRUCTURES DESIGN

Subject: Underground Storage of Hazardous Substances
Comments on Draft Regulations

An engineering review of the draft regulations and attendance at your workshop on September 24, 1984, have generated the following comments on the draft regulations.

1. Tanks are presently defined as including all attached piping. A subsidiary definition of "piping" should be included which would be limited to piping which would contain liquid under normal or reasonably predictable circumstances. For motor vehicle fuel tanks this would exempt vent and vapor recovery lines from secondary containment. These pipes contain only vapors, and are vented to the atmosphere, so any escape would be through the open vent, rather than through the pipe wall and into the soil or backfill. These exemptions would not compromise the ground water protection of the regulations.

   Secondly, piping which is attached to tanks should only be subject to secondary containment where it is below grade. Requirements for secondary containment above grade do not advance the ground water protection objective of these regulations. Sealing or extending the secondary piping containment to prevent surface water inflow would be necessary and reasonable.

2. Although the state law requires separate treatment of motor vehicle fuel tanks, from an engineering and environmental standpoint, there is no justification for treating diesel fuel one way if it is to be used ultimately in an on-highway truck and differently if it is to be used for an emergency generator, for off-road equipment, or to fire a stationary boiler.

Received DTS
OCT 18 1984

3. In Article 3, New Tank Construction Standards - a number of points require clarification. Construction standards for double wall tanks need to specify the corrosion resistant construction for the outer tank rather than the primary tank. Some consideration should be given to the potential corrosion occuring between the walls and inside the primary tank. Of the four surfaces, the innermost would be subject to the least corrosion in hydrocarbon service. A pressurized or evacuated interstitial space, or one filled with liquid would be relatively safe from corrosion. An interstitial space vented to atmosphere would be subject to collection of condensation combined with a continuous supply of air. Cathodic protection of the exterior tank may or may not protect the inner tank. If that is the expectation, it should be explicit.

   Daily gauging and inventory reconciliation is not a reliable indicator of leakage in facilities other than retail sales outlets. The pump registers for most non-retail facilities are neither calibrated nor sealed by weights and measures. The conscientiousness of the tank gauger is questionable where the fuel facility is an adjunct to some other primary business or activity (highway maintenance in the case of Caltrans). Finally, the operation may be less than daily during all or part of the year. If continuous monitoring is provided, there is no advantage to daily gauging in addition.

   The requirement for a striker plate in all tanks is positive, however a 2 inch square striker plate under a 2 inch tank opening with no guide tube would meet the regulations and would likely be missed more often than hit. A larger striker plate or an additional requirement for a guide tube would make this regulation more functional.

   The approval of a registered corrosion engineer for the types of corrosion resistant tanks listed appears to be unnecessary. When the options are so limited and all are excellent corrosion inhibitors, the judgement of a professional is an unnecessary expense. A requirement for a registered corrosion engineer's judgement on any alternate system would be more appropriate.

   Section 2633(f) exempts motor vehicle fuel piping which is pressurized from double containment if the pump is equipped with a leak detector. Especially for fuel facilities which are used sporadically with no fuel pumped for hours at a time or even over a weekend,

a suction pump is its own leak detector. A leak of .05 gallons/hour from a twenty foot length of 1½ inch product pipe would completely drain the pipe in 40 hours[1]. This would seriously delay or possibly prevent the delivery of fuel after a weekend, much as a leak detector on a submersible pump. Furthermore, once the pipe was emptied above the leak point, no more fuel could leak out until the pump was used again and the line refilled. For the majority of Caltrans' facilities periods of complete shut off of the pumps from 16 hours daily to three day weekends are common.

4. A temporary, less restrictive, monitoring procedure should be provided for fuel tanks which are scheduled for replacement. For public agencies, a wholesale program of either monitoring wells or systematic tank replacements will require long range budgeting. If initial soils testing, initial precision tank testing and an average of one 65' ground water leak detection well per tank are required for each existing Caltrans tank the cost as estimated in the Fiscal Impact Statement for these regulations would be over 5.8 million dollars[2]. For tanks which may be nearing the end of their useful life, an expenditure of $7,000 per tank for a short term monitoring program is fiscally irresponsible. A five year replacement schedule for all existing tanks over fifteen years old would be a better value and would do more to protect the environment in the long run. The present draft regulations neither allow for this type of systematic approach, nor for budgeting the 5.8 million dollars over a number of years.

   The requirement for ground water assurance monitoring is likely to cause more problems than it will prevent. The potential for contaminating a deep aquifer during drilling or due to a faulty seal or surface infiltiation must be weighed against the protection afforded. In an area with multiple tank facilities in an urban or suburban area, the potential for one poorly constructed well out of dozens of wells required makes this requirement of questionable safety. Monitoring of existing wells in the area for contamination would accomplish the same ends but would not run as great a risk of surface contamination. Apportionment of the monitoring cost among tank owners in an area would have to be addressed, but should not be insurmountable. As written,

---

1 New York State Department of Environmental Conservation, Technology for the Storage of Hazardous Liquids, p. 116.

2

Initial Soils Testing	$1600	
Initial Precision Test	400	
Ground Water Leak Well	5000	
	$7000	
	x 834	tanks
	$5,838,000	

the monitoring regulations would result in each tank owner monitoring not only his own facility, but all those facilities upgradient. Some of those facilties may infact be exempt from monitoring requirements themselves due to their association with agricultural uses.

5. Clarification is needed on the status of underground tanks which are temporarily out of operation, but still storing products. Caltrans has several facilities which are closed seasonally due to closure of the roads they maintain, and several others that are only open during the storm season, as satellites of year round stations. If electronic monitoring is installed with a remote alarm to an operating facility, it should not be necessary to treat these as temporarily closed tanks.

   The requirement for 45 days prior notification would not be feasible for these facilties where opening and closing dates are determined by weather conditions and may vary from year to year. If the 45 day requirement is dropped, or if the prior notification period is left up to local authorities, care should be taken to prevent local authorities from requiring excessive prior notification periods.

6. The allowance for provisional permits in Article 10 should be amended to allow for provisional permits of not more than one year. A quarterly review could be a requirement at local discretion. A shorter term permit could still be issued if conditions required it.

   The draft regulations while, expensive to implement and not entirely practical from the view of existing technolgy and other applicable regulations, such as NFPA, do reduce the ambiguity of the authorizing legislation. In summary, two general comments are in order. First, the requirements for new construction are relatively clear cut and the technology to enable compliance is available or becoming available. Secondly, the requirements for monitoring existing tanks are excessive, cumbersome and technologically infeasible at this time.

If you have additional questions, please contact Virginia Squire 3-0507.

R. C. Cassano, Chief
Office of Structures Design

By R. T. Fuller

R. T. Fuller,
Design Supervisor

Subchapter 16
35

HS

BUFORD OIL COMPANY

9925 - 8¾ AVENUE — P.O. BOX 104
HANFORD, CALIFORNIA 93232

OCTOBER 15, 1984

MR HAROLD SINGER
DIVISION OF TECHNICAL SERVICES
P O BOX 100
SACRAMENTO, CA 95801

DEAR MR. SINGER,

WE ARE A SMALL PETROLEUM JOBBER IN HANFORD, CA., SELLING TEXACO GASOLINE TO LOW GALLONAGE SERVICE STATIONS.

I CAN APPRECIATE THE NEED TO PROTECT THE UNDERGROUND WATER SUPPLY. HOWEVER, THE REGULATIONS BEING PROPOSED WOULD BE EXTREMELY EXPENSIVE.

FOR ALL PRACTICAL PURPOSES, IT WOULD PUT ALMOST ALL SMALL SERVICE STATIONS AND DISTRIBUTORS OUT OF BUSINESS.

THERE HAS TO BE SOME MIDDLE GROUND THAT WOULD PROTECT OUR UNDERGROUND WATER, YET ALLOW THOUSANDS OF SMALL BUSINESSES TO CONTINUE TO OPERATE.

I ERNESTLY URGE YOU TO FIND A COMPROMISE POSITION WHICH COULD ADDRESS ALL OF THE PROBLEMS.

VERY TRULY YOURS,

William E. Buford

WILLIAM E. BUFORD

Received DTS
OCT 1 8 1984

#36 HS

HEDBORG ASSOCIATES, INC.
CORROSION CONSULTANTS
POST OFFICE BOX 94
SAN CLEMENTE, CALIFORNIA 92672

C. ERIK HEDBORG, P.E.

AREA CODE 714
492-3661

October 15, 1984

Mr. Edward C. Anton, Chief
Division of Technical Services
State Water Resources Control Board
Post Office Box 100
Sacramento, CA 95801

Subject: AB 1362 (Sher Bill)

Gentlemen:

I have recently learned of AB 1362 which would requires:

1. Double walled construction for underground fuel storage tanks.

2. The drilling of 200 foot deep test wells adjacent to underground fuel storage tanks to monitor for leaks.

It is my opinion that the above proposed regulations are technologically faulted. The prevention of corrosion on double walled, steel tanks would be very difficult, if not impossible, to achieve. The drilling of deep monitor wells adjacent to the tanks would be very expensive and the data obtained would not be definitive.

I respectfully urge that the State Water Resources Control Board accept the NACE recommended practice for the control of corrosion on buried steel tanks which calls for a protective coating and an effective cathodic protection system. Monitoring for leaks can be more realiably and economically accomplished through periodic hydrostatic pressure testing and on-going records to permit comparisons between the fluid volumes going into and out of a tank.

I am a registered professional corrosion engineer (Certificate No. 345) in the state of California and I respectfully ask that you give serious consideration to the views expressed above.

Very truly yours,

C.E. Hedborg

C.E. Hedborg

CEH/sem

cc: Mr. Harold Singer

Received DTS
OCT 19 1984

#37 #3

Shell California Production Inc.
A Subsidiary of Shell Oil Company

P.O. Box 11164
Bakersfield, California 93389

OCT 15 1984

State Water Resources Control Board
Division of Technical Services
ATTN Mr. Harold Singer
P. O. Box 100
Sacramento, CA 95801

Dear Mr. Singer:

SUBJECT: COMMENTS ON PROPOSED REGULATIONS GOVERNING UNDERGROUND STORAGE OF HAZARDOUS SUBSTANCES (SUBCHAPTER 16 OF CHAPTER 3, TITLE 23 CAC)

Shell California Production Inc. is pleased to provide the following comments on the Agency's proposed regulations governing underground storage of hazardous substances. We believe the entire proposed package goes far beyond the Statutory Intent of AB 1362. The Agency comments in the Statement of Reasons that "there are three separate but equally important monitoring objectives. They are: insuring that the ground water is not being contaminated, detecting currently leaking tanks and tanks that have leaked in the past, and detecting future leaks before groundwater can be affected" (emphasis added). Nowhere does the Statute require that the Board look at "tanks that have leaked in the past.". Section 25284.1 of the Health and Safety Code only addresses the installation of "a monitoring system capable of detecting unauthorized releases" of hazardous substances.

Along similar lines, the primary purpose of Assembly Bill 1362 was to protect waters of the State from discharges of hazardous materials from undergound tanks. Where no groundwater exists under tanks, those tanks should be exempted from the regulation.

In some areas of the state, for example the Belridge Oilfield located on the westside of the southern San Joaquin Valley, moisture deficient soils overlay the first fluid encountered which is crude oil, 300-800 feet below the surface. A meaningful purpose would not be accomplished by implementing your proposed regulations in such a case. There is no groundwater above the oil zone! Therefore, at a minimum, we recommend that, under Article 4, Sections 2645 (b) and 2647 (b), an item (5) be added to read as follows: "It can be demonstrated that no groundwater exists." This additional condition would exempt underground tanks from the groundwater and vadose zone monitoring requirements where it can be demonstrated that no groundwater exists.

In addition to these comments, we concur and endorse the comments being prepared by the Western Oil and Gas Association. We encourage you to incorporate their comments into the final regulations to be developed.

Received DTS
OCT 19 1984

BAAM8428601

Finally, we believe the statute itself is badly flawed. It attempts to legislate a solution to an extremely complex geologic and hydrologic problem with a simplistic, broad brush approach that wastes millions of dollars by imposing needless and indiscriminate conditions without insuring that the problem will be solved. Time schedules are unrealistic; far more study is needed; and priorities should be established based on these studies. More site specific differentiation in control requirements are needed to address various degrees of risk. We urge the Board to work with the affected industry in seeking to obtain the necessary legislative correction of these deficiencies at the earliest possible opportunity.

We hope that these comments will be given serious consideration. We appreciate the opportunity that has been provided to make our concerns known to you.

If you would like to discuss any of our comments in greater depth, please contact Mr. R. E. Ouellette at (805) 326-5280 or Mr. B. L. Faulk at (805) 326-5220.

Very truly yours,

J. E. Dozier, Jr.
Manager of Safety and Environmental Conservation

REO/BLF/tg

cc: Shell Oil Company
ATTN John Geoghegan
1101 J Street, Suite 720
Sacramento, CA 95814

B. L. Faulk-Kernridge

37 C

Shell California Production Inc.
A Subsidiary of Shell Oil Company

P.O. Box 11164
Bakersfield, California 93389

November 26, 1984

State Water Resources Control Board
Division of Technical Services
ATTN Mr. Harold Singer
P. O. Box 100
Sacramento, CA 95801

Dear Mr. Singer:

SUBJECT: COMMENT ON PROPOSED REGULATIONS GOVERNING UNDERGROUND STORAGE OF HAZARDOUS SUBSTANCES (SUBCHAPTER 16 OF CHAPTER 3, TITLE 23 CAC) DRAFT REGULATIONS DATED NOVEMBER 9, 1984

Shell California Production Inc. is pleased to provide the following comments on the Agency's latest revised draft of the proposed regulations governing underground storage of hazardous substances. We applaud the changes which have been made following receipt of comments from the public on your August 23, 1984 draft. We believe that the direction currently being followed will lead to a more effective program than that proposed earlier.

There are several areas, however, which still need to be addressed. As discussed in our previous letter dated October 15, 1984, a mechanism in the regulations should be available to exempt tanks located in moisture deficient soils which overlay deep or non-existent groundwater. While a site specific variance is available, it seems to be contrary to State Law to deny the local authority the discretion to approve or disapprove the installation of vadose zone monitoring wells for such facilities. In other words, why can't the local agency grant the variance or why can't the regulations specify under certain conditions that no vadose or groundwater well are needed?

A second item we wish to bring to your attention concerns the time table required to implement the regulations. We understand the time constraints placed upon the Agency in developing these regulations. However, we believe that a mechanism should be established in which local agencies and the regulated community will both be able to to comply with a July 1, 1984, compliance date. It seems to us that a phased approach, such as large tanks, medium tanks and small tanks program could be established such that over the course of 1 year from July, 1, 1985, all tanks would be under a valid permit. In addition, the monitoring program required to be installed, as stated in the public comments heard on October 23, 1984, can not physically occur because of the lack of qualified, competent drilling firms. Both of these points are good reasons for allowing a phased approach to implementation.

CBAM8433101

Lastly, we have worked on developing the WOGA comments on this recent draft and request that the staff carefully consider the comments submitted by WOGA.

We hope that these comments will be given serious consideration. We appreciate the opportunity that has been provided to make our concerns known to you.

If you have any questions, please contact Mr. R. E. Ouellette, at (805) 326-5280 or Mr. B. L. Faulk at (805) 326-5220.

Very truly yours,

Raymond E. Ouellette

for Joe E. Dozier, Jr.

REO/tg

cc: Shell Oil Company
ATTN Mr. Geoghegan
1101 J Street, Suite 720
Sacramento, CA 95814

B. L. Faulk-Kernridge

#37-E H3

Shell Oil Company

P.O.Box 3105
Houston, Texas 77001

November 21, 1984

State Water Resource Control Board
Division of Technical Services
ATTN: Mr. Harold Singer
P.O. Box 100
Sacramento, CA 95801

Gentlemen:

SUBJECT: COMMENTS ON PROPOSED REGULATIONS GOVERNING UNDERGROUND STORAGE OF HAZARDOUS SUBSTANCES DATED 11/9/84 (SUBCHAPTER 16 OF CHAPTER 3, TITLE 23 CAL)

Shell Oil Company is pleased to provide the following comments on the Board's proposed regulations governing underground storage of hazardous substances (Revised 11/9/84). Shell Oil Company has participated in the development of, and supports the Western Oil and Gas Association's comments dated November 27, 1984.

In addition to the comments made on behalf of W.O.G.A., we offer the following area of concern:

Section 2643(e) Inventory Reconciliation

This section requires wholesale meter deliveries to be verified with a specific procedure as part of the inventory reconciliation.

Many businesses are open and operating while deliveries are being made. In order to perform this verification, sales would have to be suspended while deliveries are being made. Additionally, at some locations the operator and wholesaler are the same company and requiring meter verification is redundant.

We believe inventory reconciliation regulations should be written as a performance specification. Thereby eliminating the need for specific wholesale meter delivery regulations.

We appreciate this opportunity to comment on the draft regulations.

Very truly yours,

G. S. Hagy, Senior Engineer
Environmental, Marketing Engineering

mfl

Received DTS
DEC 5 1984

BTMS8432603

#37f DH

Shell Oil Company

P.O.Box 3105
Houston, Texas 77001

May 24, 1985

Mr. David Holtry
Division of Water Quality
State Water Resources Control
P. O. Box 100
Sacramento, California 95801-0100

Dear Mr. Holtry:

We are taking this opportunity to make written comments on the amendment to regulations adopted January 18, 1985, to be codified in Subchapter 16 of Chapter 3, Title 23, California Administrative Code (23 CAC Sections 2610-2714).

Our comments are as follows:

Section 2621, Additional Definitions

"Groundwater" means subsurface water which flows into a well.

Comment - (Add) within a reasonable period.

Appendix I, Table C

Manual of methods for chemical analysis of water and waste, EPA 600/4-79-020, March 20, 1979.

Comment - This edition has been revised. ✓

Procedures manual for groundwater monitoring at solid waste disposal facilities, EPA 530/SW-611, August 1977.

Comment - This addition is outdated. ✓

General Comment

The API Groundwater Monitoring and Sample Bias publication should be added to this Appendix. ✓

Received DT:
MAY 29 1985

BTMT8514405

We appreciate the opportunity to comment on these regulations.

Very truly yours,

K. E. Smith, Manager
Environmental, Marketing Engineering

GSH/bad

BTMT8514405

38-E

SOUTHWEST TANK LINERS, Inc.

OFFICE:
664 WEST MAIN ROAD — P. O. BOX 731
EL CENTRO, CALIFORNIA 92244
619 / 352-4832

LICENSE NO. A418129

Dec. 3, 1984

Dear Boardmember,

I apologize for the delay in getting this information to you for your perusal. It has taken me some time to compile the letters of significance. I sincerely hope this will not be too late for your consideration.

Enclosed are letters from and to Underwriters Laboraties Inc. Many of these letters deal with the problem of the UL listing mark and the issue of vacuum testing. It is true that UL has proposed a procedure to provide a listing for tank linings. However, much of the testing they propose has been accomplished through other companies, such as U.S. Testing Labs. U.S. Testing has done extensive testing on the bonding and the immersion of our coating in all motor vehicle fuels as well as a host of other reagents. This proprietary information has been provided to your staff. Further, API 1631 is routinely recognized by most fire officials in the western United States, as is evedenced be the enclosure of the article 79-6 of the proposed Uniform Fire Code. This proposed code also removes any requirement for vacuum testing.

It seems strange to me that your staff would ignore criteria for testing in the Sher bill with the exception of the one he amended out, and ad something that is totally brand new, that is certification by an outside agency.

Received DTS
DEC 6 1984

Sincerely,

G.R. Meacham

UNDERWRITERS LABORATORIES INC.
333 PFINGSTEN ROAD · NORTHBROOK, ILLINOIS 60062
an independent, not-for-profit organization testing for public safety

March 3, 1982

Subject 58

Southwest Tank Liners, Inc.
664 West Main Road
P.O. Box 731
El Centro, CA 92244

Attention: Mr. J. R. Sessions, Owner

Subject: Underground Tanks

Gentlemen:

This is in reply to your letter of February 22 relating primarily to the Listing of Underground Tanks by Underwriters Laboratories. Since most of your questions relate to the same subject, we are not providing specific answers to each of the questions. The following general replies relate to our Listing and Follow-Up Programs and this information along with that which you will find in our Standard UL 58, copy of which is attached, should provide information currently available.

The Listing Mark (Label) on a tank indicates that the tank complied with Underwriters Laboratories requirements at the time it was shipped from the manufacturer's plant. Our published advices indicate that the tank is to be installed in accordance with NFPA Standards 30 and 31 as well as the prevailing state and local Codes. Underwriters Laboratories contact with these products ends when they leave the factory. It is the responsibility of designated local authorities to establish proper installation, maintenance and replacement as necessary. In this connection we would like to refer you to Section 1-2 of NFPA 30-1981 where you will find a definition of such local authority or "authority having jurisdiction."

Repairing of Listed (Labeled) tanks does not, in and of itself, invalidate Listing Marks, since these Marks indicate compliance with UL 58 requirements at the time the tank leaves the factory.

To cover situations where rebuilding a product is feasible, Underwriters Laboratories has established a Rebuild or Remanufactured Product Program which is to be used in conjunction with the factory Follow-Up Service Program. Under this program, products are returned to the factory where they are disassembled and worn parts are replaced. The end result is a product that complies with the requirements of the applicable Standard. This type of program has not been considered practical for an underground tank at this point in time.

We have not sanctioned, endorsed, or otherwise certified methods or materials used for the field repair of underground flammable liquid tanks. We would consider the development of such programs, if requested by a manufacturer to develop such proposal. Such programs would likely relate primarily to repairs of damage done prior to the tank being placed in service.

Underwriters Laboratories experience in the testing of tanks suggests that when buried tanks develop leaks as a result of normal use (as opposed to mishandling during installation) they should be scrapped and replaced with new Underwriters Laboratories Labeled tanks. In these situations, it is likely that the unit has been in service for a long period of time (perhaps longer than its useful life).

As mentioned previously, a copy UL Standard 58 is also enclosed and should assist in answering some of your questions. As far as questions relating to installation, we would again refer you to NFPA 30-1981, Flammable and Combustible Liquids Code.

Very truly yours,

R. R. Perschbacher

R. R. PERSCHBACHER
Assistant Managing Engineer
Casualty and Chemical
Hazards Department

Reviewed by:

E. W. Killoren

E. W. KILLOREN
Associate Managing Engineer
Casualty and Chemical
Hazards Department

RRP:am
Enclo.

Western Union Mailgram

1-015556S052002 02/21/83 ICS IPMRNCZ CSP OAKA
1 2097482242 MGM TDRN HEROLD CA 02-21 1240P EST

G R MEACHAM
PO BOX 55
HEROLD CA 95638

THIS MAILGRAM IS A CONFIRMATION COPY OF THE FOLLOWING MESSAGE:

2097482242 MGM TDRN HEROLD CA 121 02-21 1240P EST
ZIP
UNDERWRITERS LABORATORY INC
ATTN JOHN J HAWLEY
333 PFINGSTEN RD
NORTHBROOK IL 60062
GENTLEMEN:

YOUR FEBRUARY 2, 1983 LETTER SUPPOSEDLY ADDRESSED THE THIRD PARAGRAPH ON PAGE 2 OF YOUR LETTER DATED MARCH 3, 1982. I FAIL TO COMPREHEND HOW YOUR FEBRUARY 2 LETTER COMMENTS ON SUBJECT PARAGRAPH. SUBJECT PARAGRAPH DEALS WITH TESTING OF TANKS AND YOUR RECOMMENDATION THAT TANKS FOUND LEAKING BE SCRAPPED AND REPLACED WITH NEW UNDERWRITERS LABORATORIES LABELED TANKS.

PLEASE COMMENT ON YOUR PROCEDURES FOR TESTING OF IN-SERVICE UNDERGROUND STORAGE TANKS AND UPON YOUR REASONS FOR RECOMMENDING REPLACEMENT OF LEAKING TANKS WITH NEW UNDERWRITERS LABORATORIES LABELED TANKS.

SINCERELY,
G R MEACHAM
SOUTHWEST TANK LINERS INC
PO BOX 55, HEROLD, CA 95638 OR
PO BOX 731, EL CENTRO, CA 92244

21:42 EST

MGMCOMP MGM

TO REPLY BY MAILGRAM MESSAGE, SEE REVERSE SIDE FOR WESTERN UNION'S TOLL - FREE PHONE NUMBERS

UNDERWRITERS LABORATORIES INC.
333 PFINGSTEN ROAD · NORTHBROOK, ILLINOIS 60062
an independent, not-for-profit organization testing for public safety

March 1, 1983

Southwest Tank Liners, Inc.
Mr. G. R. Meacham
664 West Main Road
P. O. Box 731
El Centro, CA 92244

Subject: Field Repairs of Listed Tanks

Gentlemen:

During our February 23, 1983 phone conversation, you asked that we respond in writing as to whether the act of cutting into a UL Listed Steel Underground Tank "voids" the UL Listing Mark.

The expression "voids the Listing Mark" is a superfluous statement, since the Listing Mark means that a product complied with our requirements at the time the mark was applied. Nothing that is later done has any bearing on that fact.

Any decision regarding a field modification of an underground storage tank is the responsibility of the authority having jurisdiction. In regard to the field modifications of UL Listed tanks, we are, at this time, considering whether we can be of assistance to such approval authorities by providing a Listing program to evaluate field-applied lining systems.

Very truly yours,

JOHN J. HAWLEY
Engineering Group Leader
Casualty and Chemical
Hazards Department

Reviewed by:

E. W. KILLOREN
Associate Managing Engineer
Casualty and Chemical
Hazards Department

JJH/ss

Phone: (312) 272-8300 Telex: 72-4336 Cable: ULINC Northbrook IL

SOUTHWEST TANK LINERS, Inc.

OFFICE:
664 WEST MAIN ROAD — P. O. BOX 731
EL CENTRO, CALIFORNIA 92244
714 / 352-4832

LICENSE NO. 274728

June 24, 1983

John J. Hawley
Engineering Group Leader
Casualty and Chemical Hazards Dept.
Underwriters Laboratories, Inc.
333 Pfingsten Rd.
Northbrook, Illinois 60062

Dear Sir;

Sometime ago we talked about the testing of lined or coated underground storage tanks by applying vacuum of not more than 5.3 inches of mercury. Can you explain to me, again, how you arrived at the 5.3 inches of mercury, and also, inform me relative to the process of vacuum testing of tanks. If you have any literature available regarding vacuum testing of underground storage tanks, where may we obtain such literature?

Are applications of vacuum tests practical and feasible in a field situation?

We have tried to locate contractors who are equipped and knowledgeable to vacuum test tanks in place and have been unsuccessful.

We appreciate your help and cooperation.

Sincerely,

G. R. Moacham
Southwest Tank Liners

GM/g

UNDERWRITERS LABORATORIES INC.
333 PFINGSTEN ROAD · NORTHBROOK, ILLINOIS 60062
an independent, not-for-profit organization testing for public safety

July 13, 1983

Southwest Tank Liners, Inc.
G. R. Meacham
664 West Main Road - P. O. Box 731
El Centro, CA 92244

Our Reference: Subject 58

Subject: Tank lining Process and Materials

Gentlemen:

This letter will reply to your June 24, 1983 letter and confirm our recent phone conversations.

There are two options from which to choose, regarding tank lining. The first option would be to pursue a UL Listing By Report for the complete lining process, including an evaluation of the actual lining materials. The other approach would be to establish Component Recognition of the actual lining materials only. This lining Recognition would then assist any applicators who would want to submit their lining process for our Listing By Report, in that they would not need to repeat the evaluation of the lining materials.

The two options will be discussed below as follows:

A. Listing By Report - UL's investigation will be limited to the materials and application of the lining. The acceptability of the tank integrity for lining procedures and the lining process will be the responsibility of the inspection authority having jurisdiction. The UL investigation will culminate in a Listing By Report. In this Report, UL will fully describe the condition of the test tank used as a basis for establishing our Listing. For this reason, it is important that the test tank be representative of a worst-case condition to be considered suitable for lining.

Our Listing Program will consist of two basic elements, i.e., exposure testing of coupons on the liner itself and physical testing of a lined tank.

EXPOSURE TESTS:

Exposure tests will involve two types of samples. The first type shall be 5 by 9 in. samples of steel with lining adhered as in service. To these samples, we will bond short lengths of PVC pipe to enable us to expose only the lining to flammable liquids. The samples will be examined for permeation, as evidenced by oxidation of base metal beneath, after 30, 90, and 180 day exposure periods.

The second set of samples will also be 5 by 9 in. coupons sprayed-up to the minimum recommended lining thickness. The edges of these lining-material-only samples should be sealed by you to minimize "wicking" during the immersion tests.

The test media for each of the above exposure periods will be: premium leaded gasoline, regular leaded gasoline, No. 2 fuel oil, ASTM reference Fuel C, Toluene, No. 6 fuel oil, methanol, ethanol, a blend of 50 percent methanol with 50 percent ASTM Fuel C. Results of percent retention of flexural strength will be plotted against time at 30, 90 and 180 day intervals. The slope of the line connecting these three data points will be extrapolated to 270 days. If the line crosses the percent retention ordinate at or above 50 percent, the results are considered in compliance with our requirements. If the extrapolated curve falls below 50 percent a fourth data point at 270 day-exposure will be taken, and shall be at or above 50 percent to be considered acceptable.

SAMPLES:

For use in these exposure tests, we will need (100) 5 by 9 in. samples of the steel with liner applied, and an additional (100) 5 by 9 in. samples of the liner material only in the minimum recommended thickness representative of actual service, and with all edges properly coated.

PHYSICAL TESTS:

Using a tank selected by you and judged by II to meet the criteria outlined in your instructions, the following test and examination will be conducted. (Note: The tank selected will become the basis for judging the acceptability of future tanks for the lining process):

a. The tank will be inspected by a representative of UL's engineering staff and a detailed description of the tank's physical condition recorded.

b. The tank will then be prepared by your personnel and lined in accordance with the lining instructions.

c. The required 5 psig leakage and 5.3 in. Hg vacuum test will then be performed, exactly as they would be conducted during an actual lining procedure.

d. The tank will then be ultrasonically tested for voids and/or holidays.

e. After the buried tank has been lined, the tank will be excavated and placed at ground level for visual examination of the exterior.

f. The excavation will then be prepared for anchoring the tank as required.

g. The tank will then be repositioned in the excavation and anchored (tied down) to prevent float-out.

h. The tied-down tank will then be recovered with back fill material to grade and the entire excavation flooded for a 24 h period.

i. At the end of the 24 h flooded condition, a vacuum of 5.3 in. Hg will be imposed for 1 min to simulate an additional external pressure equivalent of 6 ft of water.

j. Unless some form of metal deflector plate is used to protect the area under the fittings from a dipstick, we will also need to conduct impact tests on the interior of the tank. A 2 lb steel ball will be dropped from a height equal to the tank diameter so as to impact the area under the fitting opening.

RESULTS

As a result of the testing described herein, there shall be no damage to the tank as evidenced by cracking, buckling, or deformation. The interior of the tank will again be examined using the ultrasonic testing procedure discussed above. There shall be no cracking of the lining material.

Upon satisfactory completion of all the tests and examinations specified, a Report will be prepared and sent to our Fire and Casualty Councils for comments. Listing will be promulgated via a Listing Report. For use in this Report, we will need detailed description of raw materials used in the lining process with regard to manufacturer's name and his material specification number for the resin, glass, catalyst, and any other materials. If you desire to have alternate materials available, they can either be submitted now, or at any time after Listing is once established. It should be kept in mind, however, that the cost estimate and samples requested above, anticipate only one basic lining system (resin).

B. Component Recognition - UL's investigation would be limited to an evaluation of the coating material's resistance to the corrosive effects of stored flammable liquids as well as the material's resistance to permeation. Our test program would be the same as discussed above under the heading "EXPOSURE TESTS".

Our cost estimate for the Listing By Report program is $15,800.00. Our cost estimate for the Component Recognition of a single coating system (resin) is $12,350.00. Please consider the above programs and advise us as to which option you would prefer. We will then provide you with the appropriate application forms and Follow-Up Service agreements.

Very truly yours,

JOHN J. HAWLEY
Engineering Group Leader
Casualty and Chemical
Hazards Department

Reviewed by:

EDWARD W. KILLGREN
Associate Managing Engineer
Casualty and Chemical
Hazards Department

JJH/EWK:alt

GLASS ARMOR

SOUTHWEST TANK LINERS, Inc.

OFFICE:
664 WEST MAIN ROAD – P. O. BOX 731
EL CENTRO, CALIFORNIA 92244
619 714 / 352-4832

LICENSE NO. ~~297788~~ 418129

November 1, 1983

John J. Hawley
Engineering Group Leader
Casualty and Chemical Hazards Dept.
Underwriters Laboratories, Inc.
333 Pfingsten Rd.
Northbrook, Illinois 60062

Sir;

On June 24, 1983 this office requested from you information on the vacuum testing of underground storage facilities. Prior to this date, you had talked to George Meacham regarding this process.

As of the above date I have not received any of this required information from you.

As the question of vacuum testing is imperative to the operation of this process in California, may we have a response from you regarding this information as soon as possible.

Sincerely,

J. R. Sessions
Owner

JS/q

GLASS ARMOR

SOUTHWEST TANK LINERS, Inc.

OFFICE:
664 WEST MAIN ROAD — P. O. BOX 731
EL CENTRO, CALIFORNIA 92244
619 ~~744~~ / 352-4832

LICENSE NO. ~~271798~~ 418129

November 30, 1983

John J. Hawley
Engineering Group Leader
Casualty and Chemical Hazards Dept.
Underwriters Laboratories, Inc.
333 Pfingsten Rd.
Northbrook, Illinois 60062

Sir;

On June 24, 1983 and again on November 1, 1983 this company requested from you clarification of vacuum testing of underground storage facilities. (See enclosed copies).

As of the above date, I have not received any of this required information from you.

May I have a response from you regarding this information as soon as possible.

Sincerely,

J. R. Sessions
Owner

JS/g
Enclosures

PS Form 3800, Apr. 1976

SENT TO	John J. Hawley Underwriters Laboratories 333 Pfingsten Rd. Northbrook, Illinois 60062
POSTAGE	$ .25
CERTIFIED FEE	.75
SPECIAL DELIVERY	
RESTRICTED DELIVERY	
RETURN RECEIPT SERVICE: SHOW TO WHOM AND DATE DELIVERED	.60
RETURN RECEIPT SERVICE: SHOW TO WHOM, DATE AND ADDRESS OF DELIVERY	
RETURN RECEIPT SERVICE: RESTRICTED DELIVERY	
CONSULT POSTMASTER FOR FEES	
TOTAL POSTAGE AND FEES	$ 1.55
POSTMARK OR DATE	EL CENTRO, CA 1983

P 318 989 582
RECEIPT FOR CERTIFIED MAIL
NO INSURANCE COVERAGE PROVIDED—
NOT FOR INTERNATIONAL MAIL
(See Reverse)

UNDERWRITERS LABORATORIES INC.
333 PFINGSTEN ROAD · NORTHBROOK, ILLINOIS 60062
an independent, not-for-profit organization testing for public safety

December 7, 1983

Southwest Tank Liners, Inc.
Mr. J. R. Sessions
664 West Main Road
P. O. Box 731
El Centro, CA 92244

Our Reference: Subject 58

Subject: Tank Lining Process And Materials

Gentlemen:

This is in response to your November 30, 1983 letter. It was our feeling that your previous letters dated June 24 and November 1, 1983 had been responded to by our July 13, 1983 letter to Mr. G. R. Meacham and subsequent telephone conversations regarding those questions. We apologize for any confusion this misunderstanding may have caused.

Specifically addressing the questions presented in your letter, we offer the following comments:

A. When ~~we first~~ began testing nonmetallic underground storage tanks we were concerned with the hydrostatic pressure imposed externally on the surface of a tank by high water conditions. In order to evaluate such a situation, we buried a tank as intended in service and flooded the excavation to grade for 24 hours. At the end of the 24-hour flooded condition a vacuum was imposed on the tank to simulate an additional 6 ft of standing water as a factor of safety. The vacuum equivalent to 6 ft of standing water was calculated to be approximately 5.3 in. of mercury. In an effort to be as consistent as possible, that number was carried over to the proposed testing of lined tanks.

B. We do not have any literature available regarding vacuum testing of underground storage tanks. All Underwriters Laboratories Inc. Listed manufacturers of nonmetallic underground storage tanks are required to vacuum test 100 percent of production at the factory. It is our

understanding that there are a number of very good commerciall available vacuum pumps which can draw a vacuum of 5.3 in. of mercury in a matter of a few minutes on tanks of almost any size.

C. We can see no reason why vacuum testing of tanks cannot be done in the field. Typical portable air compressors used to drive jack-hammers and similar construction equipment have been effectively used to also produce a vacuum by merely attaching the tank to the compressor inlet. Although not as efficient as a pump designed as a vacuum pump, such procedure seems to work quite well, especially for relatively low vacuum levels such as the 5.3 in. of mercury proposed.

Reiterating our earlier discussions, the purpose of this proposed vacuum test is to try and determine that the lining has been properly cured and the combination of the lining and steel tank afford a reasonable degree of strength. If a manufacturer can propose any alternate methods whereby the same information can be obtained without the need for a vacuum test, we would be pleased to listen to such a proposal. In the meantime, if you have any additional questions, please feel free to contact the writer.

Very truly yours,

JOHN J. HAWLEY
Engineering Group Leader
Casualty and Chemical
Hazards Department

JJH:ej

GLASS ARMOR

SOUTHWEST TANK LINERS, Inc.

OFFICE:
664 WEST MAIN ROAD — P. O. BOX 731
EL CENTRO, CALIFORNIA 92244
619 ~~744~~ / 352-4332

LICENSE NO. ~~271793~~ 418129

February 23, 1984

John J. Hawley
Engineering Group Leader
Casualty and Chemical Hazards Dept.
Underwriters Laboratories, Inc.
333 Pfingsten Road
Northbrook, Illinois 60062

Mr. Hawley;

In regards to your letter to me dated December 7, 1983, I quote from Paragraph B: "We (Underwriters Laboratories) do not have any literature available regarding vacuum testing of underground storage tanks."

My company attended a meeting in Sacramento, California February 22, 1984 with the City of San Jose and other city fire personnel concerning current California law regarding the vacuum test. Jim Albery, the City of San Jose Fire Department, informed this company that he had received from Underwriters Laboratories correspondence and literature regarding the vacuum testing of underground storage tanks sometime during the summer of 1983. He summarized from your correspondence that vacuum testing could be safely accomplished.

At this time I am requesting that you forward to me the same information that was given to the City of San Jose.

Sincerely,

J. R. Sessions
Owner

JS/g

UNDERWRITERS LABORATORIES INC.
333 PFINGSTEN ROAD · NORTHBROOK, ILLINOIS 60062

an independent, not-for-profit organization testing for public safety

April 2, 1984

Southwest Tank Liners, Inc.
Mr. J. R. Sessions
664 West Main Road
P. O. Box 731
El Centro, CA 92244

Our Reference: Subject 58

Subject: Lining Of Underground Storage Tanks

Gentlemen:

In response to your February 23, 1984 letter, we have reviewed our records and cannot find any reference to a letter which may have been sent to the city of Sacramento, CA. As we stated in our December 7, 1983 letter, we do not have any literature available regarding vacuum testing of underground tanks. Perhaps we merely notified the city of Sacramento and advised them that we felt that such testing was required, necessary, and relatively simple to conduct. If you could find a copy of the information which was sent to the city of San Jose or the city of Sacramento, please advise us. In any case, we do still feel as though vacuum testing is a viable way to test the integrity of a tank, but do not have any published information regarding exactly how such testing should be conducted. We hope this letter answers your questions, and if we can be of any further service, please feel free to contact us.

Very truly yours,

John J. Hawley

JOHN J. HAWLEY
Engineering Group Leader
Casualty and Chemical
Hazards Department

JJH:bcp

GLASS ARMOR

SOUTHWEST TANK LINERS, Inc.

OFFICE:
664 WEST MAIN ROAD — P. O. BOX 731
EL CENTRO, CALIFORNIA 92244
619 / 352-4832

LICENSE NO. A418129

May 7, 1984

John J. Hawley
Engineering Group Leader
Casualty and Chemical Hazards Dept.
Underwriters Laboratories, Inc.
333 Pfingsten Rd.
Northbrook, Illinois 60062

Mr. Hawley;

With this letter you will find enclosed a photo copy of a memo dated May 4, 1984 to Jack McKenzie, Inland Oil Company, from Paul E. Dawson, Assistant Fire Marshal, City of Vista, California.

I would like to direct your attention to the sixth paragraph stating, "Underwriters Laboratories, Inc. has a listing method for 'Lining of Underground Storage Tanks' outlined in their memo dated April 23, 1984".

At this time I am requesting from you a copy of this memo released by Underwriters Laboratories April 23, 1984. Would you please forward this memo to the address listed above as soon as possible.

Sincerely,

J. R. Sessions
Owner

JS/g

enclosure

GLASS ARMOR

SOUTHWEST TANK LINERS, Inc.

OFFICE:
664 WEST MAIN ROAD — P. O. BOX 731
EL CENTRO, CALIFORNIA 92244
619 / 352-4832

LICENSE NO. A418129

June 22, 1984

Robert G. Harris
Executive Staff Engineer
Manager, Casualty & Chemical
Hazards Department
Underwriters Laboratories
333 Pfingsten Rd.
Northbrook, Illinois 60062

Mr. Harris;

We have been informed by various local jurisdictions having authority over the installation, maintenance, repair, and removal of underground storage tanks that you have adopted a vacuum test as a method of determining several things with regard to the interior coating process. There seems to be a considerable amount of confusion as to exactly what a vacuum test will accomplish. It has been hailed as a test for bond, a test for tightness, a test for structural integrity, even, as the best test available.

Exactly what does a vacuum test accomplish? In a field situation, the top of the tank must be completely excavated for total isolation at the tank, which involves a great deal of time and material, driving the cost of repair up. Is this the purpose of vacuum testing?

It seems the vacuum test will accomplish nothing which can not be accomplished through more economic, less time consuming, and more easily performed tests by personnel in the field.

If the vacuum test is seen as a test for structural integrity of the storage vessel, can not steel thickness, as measured through ultrasonic testing, also insure that the storage vessel has sufficient structural stability to remain a viable storage facility over an extended period of time?

If the vacuum test is seen as a test for bonding of the coating to the steel, is the vacuum placed upon the tank sufficient to do that? If a tank is repaired per API 1631, there are a maximum number of perforations and a maximum diameter those perforations may be. One hole in the very bottom of a tank 1/8 of an inch in diameter would seem to sustain an insignificant amount of pressure from

5.3 inches of mercury vacuum and thereby be added cost for naught. Even if the perforations were at a maximum as per API 1631, the pressure would still be insignificant. Further, we have engineering reports which indicate that a vacuum on an empty tank accomplishes nothing in determining bonding of a coating to the steel. Do you have contradictory engineering data? If so, please be so kind as to make it available to us.

We have been informed by testing laboratories that ultrasonic testing can determine structural integrity of a tank when coupled with a precision test such as the Petro-Tite system.

Again, what is the purpose of the vacuum test?

We view it as a move by opponents of the tank lining process to increase costs, thereby, making tank lining less an attractive alternative to replacing with new storage. If this is in fact a conspiracy to eliminate an industry with a proven record of safety for over a quarter of a century in containing hazardous materials, you can see, quite readily, the implications.

Can you support your decision to use and recommend the use of vacuum testing with solid replicable engineering test results? If so, please do so.

Sincerely,

J. R. Sessions

J. R. Sessions
Owner

JS/g

UNDERWRITERS LABORATORIES INC.
333 PFINGSTEN ROAD · NORTHBROOK, ILLINOIS 60062

an independent, not-for-profit organization testing for public safety

June 26, 1984

Southwest Tank Liners, Inc.
664 West Main Road
P.O. Box 731
El Centro, CA 92244

Dear Mr. Sessions:

In response to your letter of June 22, 1984, Mr. Harris has left Underwriters Laboratories Inc. A reply to your letter is being developed and will be forwarded as soon as possible.

Very truly yours,

Edward W. Killoren

EDWARD W. KILLOREN
Managing Engineer
Casualty and Chemical
Hazards Department

EWK:ha

Look For The UL Listing or Classification Mark On The Product

UNDERWRITERS LABORATORIES INC.
333 PFINGSTEN ROAD · NORTHBROOK, ILLINOIS 60062
an independent, not-for-profit organization testing for public safety

July 10, 1984

Southwest Tank-Liners, Inc.
Attn: Mr. J. R. Sessions
664 West Main Road
P. O. Box 731
El Centro, CA 92244

Our Reference: Subject 58

Subject: Lining of Underground Steel Tanks

Gentlemen:

This will reply to your June 22, 1984 letter to Mr. Robert G. Harris. Your letter restates a number of items discussed earlier in the writer's December 7, 1983 letter. We will attempt to answer each paragraph of your letter.

A. Paragraph No. 1 - We agree that a vacuum test can be a test for bond, a test for tightness, a test for structural integrity, and one of the best tests available for evaluating these items.

B. Paragraph No. 2 - To properly clean and purge a tank, we feel that the tank should be isolated completely, meaning excavation of all fittings. UL would have no reason for wanting to "drive-up" the cost of repair, but we are interested in providing the best method of evaluating the integrity of the tank. As to what we feel a vacuum test accomplishes, please refer to the last paragraph of our December 7, 1983 letter, copy attached.

C. Paragraph No. 3 - Again, as noted in the last paragraph of our December 7, 1983 letter, if you have a specific alternate method to propose, please do so, and we will consider it.

D. Paragraph No. 4 - Please provide us with any engineering formulae which take into account corroded steel properties and/or additional structural strength afforded by the lining. We know of no such formulae.

E. Paragraph No. 5 - As stated previously, we are more concerned with structural integrity of the lining than of the bonding of the lining to the steel. We have heard of a number of FPR tank production vacuum test implosions due to a "green cure" of an FPR laminate. As to whether a vacuum test could evaluate the adhesive bond, such a test would obviously be dependent on the cohesive properties of the lining being greater than its adhesive properties.

F. Paragraph No. 6 - UL is using ultra-sonic testing on an every-day basis and recognizes that this is a method that can readily be used to spot-check tank thickness. We question, however, the value of an ultra-sonic test alone to judge overall integrity of a complete tank, since all engineering load equations anticipate a homogeneous wall thickness and therefore do not take into account thin spots, etc.

G. Paragraph No. 7 - We believe this has been adequately responded to herein.

H. Paragraph No. 8 - The vacuum test proposal (which is indeed still a proposal) is UL's proposal. We consulted with none of your "opponents" in making this proposal, and can assure you that there was no conspiracy involved.

I. Paragraph No. 9 - Aside from conducting vacuum tests on nonmetallic tanks for some 20 years, we have no test results to report on lined tanks. Perhaps if a tank liner were to pursue an investigation with UL, we would have the data you seek.

In summary, we wish to reitterate the fact that the test program outlined in our July 13, 1983 letter to your Mr. G. R. Meacham is our best effort at a proposed program. When we have the opportunity to implement that prosed program, it may turn out that some tests will be added, and others deleted. Thus far, we have had no submittals.

Very truly yours,

JOHN J. HAWLEY
Engineering Group Leader
Casualty and Chemical
Hazards Department

Reviewed by:

WILLIAM R. HOOPER
Associate Managing Engineer
Casualty and Chemical
Hazards Department

JJH/ss

GLASS ARMOR

SOUTHWEST TANK LINERS, Inc.

OFFICE:
564 WEST MAIN ROAD — P. O. BOX 731
EL CENTRO, CALIFORNIA 92244
619 / 352-4832

LICENSE NO. A418129

July 29, 1984

John J. Hawley
Engineer and Group Leader
Casualty and Chemical Hazards Dept.
Underwriters Laboratories
333 Pfingsten Rd.
Northbrook, Illinois 60062

Mr. Hawley:

For your information, please find enclosed a copy of a letter dated July 9, 1984, from Swanson Service Corporation.

These engineers have reviewed and analyzed data regarding the proposed vacuum test of coated underground storage tanks, have issued an opinion and have suggested alternatives to the vacuum test. This independent investigation has, in effect, confirmed the API publication 1631 guidlines for lining of the interior of underground storage tanks. Their suggestions are remarkably similar to API 1631 with regards to cleaning and inspection. The recommended testing is designed for repaired areas and can be accomplished by testing the entire vessel using a precision test as defined in NFPA 329. The precision test would provide more than adequate testing for leaks in a storage tank.

We would propose these alternatives to the vacuum test and request that you review the letter's suggestions carefully and issue an opinion regarding same.

We too agree that vacuum testing is neither a safe nor prudent operation. If we are amiss in our attitude toward the proposed vacuum test, which, even though only a proposal, is being implemented in local jurisdictions because your proposals seem to carry the weight and authority of statute with the local jurisdictions, please be so kind as to inform us as to where we are wrong in our thinking.

Sincerely,

J. R. Sessions
President

GLASS ARMOR

SOUTHWEST TANK LINERS, Inc.

OFFICE:
664 WEST MAIN ROAD — P. O. BOX 731
EL CENTRO, CALIFORNIA 92244
619 / 352-4832

LICENSE NO. A418129

June 1, 1984

Harold Singer
Water Quality Control Board
Division of Technical Services
P. O. Box 100
Sacramento, California 95801

Mr. Singer;

For your information find enclosed:

- Tanknology letter from Mr. Ed Adams to Mr. Paul Meli, Bridgeport Chemical Corporation, dated 4/6/84 (please note in particular pg. #3, item #1, and I quote: "A vacuum test on an empty tank provides no useful information on the bonding of the epoxy coating.)

- Recommended Practice for the Interior Lining of Existing Steel Underground Storage Tanks, American Petroleum Institute, Publication 1631

- Technical Information Bulletin, Specifications, Bridgeport Chemical Corporation

- Report of Test, United States Testing Company, dated 5/28/80

- Safety Data Sheet, Bridgeport Chemical Corporation

If you should require any further information, do not hesitate to call me.

Sincerely,

J. R. Sessions
Owner

JS/g

Enclosures

UNDERWRITERS LABORATORIES INC.
NORTHBROOK, IL · MELVILLE, NY · SANTA CLARA, CA · TAMPA, FL
an independent, not-for-profit organization testing for public safety

333 Pfingsten Road
Northbrook, Illinois 60062

Subjects 58, 1316

April 23, 1984

TO: Manufacturer's of Steel Tanks, Composite Tanks, and Nonmetallic Tanks for Underground Storage of Flammable Liquids and/or Petroleum Products

SUBJECT: Lining of Underground Storage Tanks

UL provides two options for the investigation of tank linings: (1) Listing by Report for the complete lining process including an evaluation of the actual lining materials and (2) Component Recognition of the lining materials only. This Component Recognition would assist any applicators that wish to submit their lining process to UL for Listing by Report, in that it would not be necessary to repeat the evaluation of the lining materials.

Details of these two options are discussed below.

A. Listing by Report - UL's investigation is limited to the materials and application of the lining. The acceptability of the tank intended to be lined and the lining process will be under the jurisdiction of the inspection authority.

   UL's investigation consists of two basic elements: (1) exposure testing of coupons of the lining only and (2) physical testing of a lined tank. The tests involved are outlined in the Appendices A and B.

   Upon satisfactory completion of all the tests and examinations specified, a report is then prepared and sent to UL's Casualty and Fire Councils for comments. Listing is promulgated by means of a Listing Report.

B. Component Recognition - UL's investigation is limited to an evaluation of the coating material's resistance to the corrosive effects of stored flammable liquids as well as the material's resistance to permeation. The test program for Component Recognition is outlined in Appendix A; it does not include the tests outlined in Appendix B.

If you would like to submit drawings for review, please address your request to Mr. S. C. Slowik, Associate Project Engineer at UL's Northbrook office.

UNDERWRITERS LABORATORIES INC.

JOHN J. HAWLEY
Engineering Group Leader
Casualty and Chemical Hazards
Department

REVIEWED BY:

ROBERT G. HARRIS
Executive Staff Engineer
Manager
Casualty and Chemical Hazards
Department

SR:JES

A P P E N D I X A

TEST PROGRAM FOR EVALUATING TANK-LINING SYSTEMS

PHYSICAL TESTS OF LAMINATE:

METHOD

Five by nine inch (127 by 229 mm) lining samples are to be immersed in the solutions specified below and maintained at a temperature of 100°F (38°C). Specimens are also to be exposed in an air-circulating oven maintained at a temperature of 158°F (70°C). After 30, 90, 180 and, if necessary, 270 days, selected samples are to be removed from the solution and tested for flexural strength and Izod impact.

The specimens subjected to the flexural strength test are to be tested in accordance with the Test Method for Tensile Properties of Plastics Using Microtensile Specimens, ASTM D1708-79, using a cross head speed of 0.01 inch/minute (0.25 mm/minute).

The specimens to be subjected to the Izod impact test are to be tested in accordance with the Test Method for Impact Resistance of Plastics and Electrical Insulating Materials, ASTM D256-81.

SOLUTIONS FOR IMMERSION

The following solutions are to be used for immersion of the samples:

1. Premium leaded gasoline
2. Regular unleaded gasoline
3. No. 2 fuel oil
4. ASTM Reference Fuel C.
5. Toluene
6. No. 6 fuel oil
7. 100-percent methanol
8. 100-percent ethanol
9. 50-percent ethanol, 50-percent ASTM Reference Fuel C

10. 50-percent ethanol, 50-percent ASTM Reference Fuel C

11. 85-percent Reference Fuel C, 15-percent methanol

12. 85-percent ASTM Reference Fuel C, 15-percent ethanol

13. 70-percent ASTM Reference Fuel C, 30-percent ethanol

14. Distilled water

PERMEANCE - COATING DISSOLUTION EVALUATION:

METHOD

Coupon samples of the lining only are to be bonded to glass dishes containing the immersion solutions. Before the samples are attached to the dishes, the thickness is to be measured in the center of each quadrant and these values are to be recorded for later use. The assemblies are to be weighed on an analytical balance. The assemblies are then to be inverted and placed in a 100°F (38°C) ambient chamber so that the solution will contact the test specimen.

To determine the rate or percent of transmission of the solution through the test specimen, the assemblies are to be reweighed after 30, 90, 180 and, if necessary, 270 days. At the conclusion of the test, the thickness of each sample is to be remeasured and any loss or swelling is to be recorded.

RESULTS

No permeance or dissolution of the liner material is to occur.

BONDING TO SURFACE:

METHOD

Steel coupons coated with the minimum thickness of liner material are to be bonded to glass cups filled with each of the immersion solutions and the assemblies are to be inverted so the solution contacts the surface. Before bonding the coupons to the cup, the hardness of the liner material is to be determined. Following each exposure period, the exposed liner material is to be visually examined and the hardness determined.

RESULTS

There shall not be any softening blistering or uplift of the liner material.

COLD IMPACT:

METHOD

Six by six inch (152 by 152 mm) sheets of the liner are to be conditioned for 16 hours in a cold box maintained at minus 20°F (minus 29°C). Each conditioned specimen, and additional unconditioned specimens, are to be clamped between two steel rings having an inside diameter of 4.25 inch (108 mm) and impacted once by dropping a 1.18 pound (535 g) steel sphere from a height of 6 feet (1.83 m) onto the surface of the specimen.

RESULTS

The samples shall not crack or show rupture of the liner.

A P P E N D I X B

TEST PROGRAM FOR EVALUATING THE STRUCTURAL SUITABILITY OF TANK-LINING SYSTEMS

PHYSICAL TESTS OF TANK:

METHOD

Using a tank selected by the manufacturer and judged by UL to meet the criteria outlined in the manufacturer's instructions, the following test and examination are to be conducted.

Note: The tank selected will become the basis for judging the acceptability of future tanks for the lining process.

1. The tank is to be inspected by a representative of UL's engineering staff and a detailed description of the tank's physical condition recorded.

2. The tank is then to be prepared by the manufacturers personnel and lined in accordance with the lining instructions.

3. A 5-psig (34.5-kPa) leakage and 5.3-inch (135-mm) Hg vacuum test are then to be performed, exactly as they are conducted during an actual lining procedure.

4. The tank is then to be tested for voids and holidays.

5. After the buried tank has been lined, the thank is to be excavated and placed at ground level for visual examination of the exterior.

6. The excavation is to be prepared for anchoring the tank as required.

7. The tank is to be repositioned in the excavation and anchored (tied down) to prevent float-out.

8. The tied-down tank is to be recovered with back fill material to grade and the entire excavation flooded for a 24 hours.

9. At the end of the 24-hour flooded condition, a vacuum of 5.3 inch (135 mm) Hg is to be applied for 1 minute to simulate an additional external pressure equivalent of 6-feet (1.83-m) of water.

10. Unless a metal deflector plate is provided to protect the area under the fittings from a dipstick, an impact test is to be conducted on the interior of the tank. A 2-pound (901-g) steel sphere is to be dropped from a height equal to the tank diameter so as to impact the area under the fitting opening.

RESULTS

As a result of the tests, there shall be no damage to the tank as evidence by cracking, buckling, or deformation. The tank is again to be tested for voids or holidays. In addition, there shall be no cracking of the lining material.

GLASS ARMOR

SOUTHWEST TANK LINERS, Inc.

OFFICE:
664 WEST MAIN ROAD — P. O. BOX 731
EL CENTRO, CALIFORNIA 92244
619 / 352-4832

LICENSE NO. A418129

June 18, 1984

Factory Mutual Engineering
1000 Four St., Suite #700
San Rafael, California 94901

Attn: Raymond J. Croteau
Assistant Vice President/District Manager

Sir;

As you may be aware, certain local jurisdictions are requiring a vacuum test of 5.3 inches of mercury be performed on underground storage tanks, which have contained motor vehicle fuel, after they are repaired.

We have received engineering data from major oil companies indicating there may be hazards involved with vacuum testing of tanks. On the other hand, we have received information from Athabasca Research, Ltd. of Canada that clearly shows, with the proper equipment, a slight vacuum will detect leaks in underground storage tanks containing product.

We have been, supposedly, relieved of liability for the vacuum test performed on tanks we repair, provided the test is performed by another firm. However, this does not relieve our moral obligation to insure that a possibly unsafe procedure is not performed causing property damage or injury to those in the vicinity.

The vacuum test has been latched onto by local jurisdictions as a kind of cure-all test. The test is being claimed an effective verification of structural integrity of the storage vessel and bonding of a coating to the steel shell. The 5.3 inches of mercury vacuum is claimed as being equivalent to a 6 foot stand of water. I am no engineer, but it seems to me that vacuum on an underground storage tank is quite different from the external pressures created from ground water which would seem to decrease as the water level decreases.

We at Southwest Tank Liners do not know the condition of every tank tested, nor do we know the definite age or the manufacturer of the tank. Also unknown is the existing external loading on the tank. It is true that fiberglass tanks are supposedly routinely tested above ground at the manufacturer. However, these fiberglass tanks have domed ends to withstand such vacuum pressures. Steel tanks do not.

Our question is this: does Factory Mutual have any research data available on vacuum testing of underground storage tanks of up to 20,000 gallons? If so, how may we obtain such engineering data? If not, do you know of any firm or company that has generated such engineering data? Further, does Factory Mutual Engineering have any opinion on vacuum testing of underground storage tanks?

We may repair a thousand tanks through the interior coating process and have no problems with the vacuum test. But if the next one imploded, what would be the result? We don't know, and neither does anyone else. Yet the local jurisdiction insists on using the public as somewhat of a guinea pig.

For your information please find enclosed reports and data from different sources regarding vacuum testing of underground storage tanks.

We would appreciate hearing from you as soon as possible. The vacuum test, quite frankly, leaves us uneasy yet it is being performed with unknown results.

Thank you for your time and consideration. We will appreciate any assistance you might provide.

Sincerely,

J. R. Sessions

J. R. Sessions
Owner

JS/g

Enclosures

LAW OFFICES
BLECHER, COLLINS & WEINSTEIN
TWENTY-EIGHTH FLOOR
611 WEST SIXTH STREET
LOS ANGELES, CALIFORNIA 90017

ROBERT M. LINDQUIST

(213) 622-4222
TELECOPIER (213) 622-1656

August 10, 1984

Hales Testing Laboratories
23286 Foley
Hayward, California

Re: Vacuum Testing of Underground Storage Tanks

Gentlemen:

We represent Southwest Tank Liners, Inc., 664 West Main Road, El Centro, California 92244.

We are seeking information on the vacuum testing of underground fuel storage tanks that have been repaired by the process of lining. Such a vacuum test is referred to in Section 25284.5(1) of the California Health and Safety Code (known as the "Sher Bill".)

If you have performed or intend to perform the vacuum test identified in the Sher Bill, we would appreciate it if you could furnish us with information concerning the engineering practices and methodology employed in your testing.

Thank you very much for your cooperation and courtesy. We look forward to an early reply.

Yours truly,

Robert M. Lindquist

Robert M. Lindquist

RML:pf

bcc: Mr. Jim Sessions

LAW OFFICES
BLECHER, COLLINS & WEINSTEIN
TWENTY-EIGHTH FLOOR
611 WEST SIXTH STREET
LOS ANGELES, CALIFORNIA 90017

ROBERT M. LINDQUIST

(213) 622-4222
TELECOPIER (213) 622-1535

August 22, 1984

Mr. Ed Sirota
IT Corporation
1750 Red Hill
Irvine, California 92714

Re: Vacuum Testing of Underground Storage Tanks

Dear Mr. Sirota

We represent Southwest Tank Liners, Inc., 664 West Main Road, El Centro, California 92244.

We are seeking information on the vacuum testing of underground fuel storage tanks that have been repaired by the process of lining. Such a vacuum test is referred to in Section 25284.5(1) of the California Health and Safety Code (known as the "Sher Bill".)

If you have performed or intend to perform the vacuum test identified in the Sher Bill, we would appreciate it if you could furnish us with information concerning the engineering practices and methodology employed in your testing.

Thank you very much for your cooperation and courtesy. We look forward to an early reply.

Yours truly,

Robert M. Lindquist

RML:pf

bcc: Mr. Bob Meacham,
Southwest Tank Liners, Inc.

GLASS ARMOR

SOUTHWEST TANK LINERS, Inc.

OFFICE:
664 WEST MAIN ROAD — P. O. BOX 731
EL CENTRO, CALIFORNIA 92243
714 / 352-4832

LICENSE NO. 274728 418129

January 30, 1984

H. B. Covey
H. B. Covey, Inc.
350 E. Commercial
Pomona, California 91767

Mr. Covey;

In reference to our phone conversation of today, I have a few further questions.

You informed me that you would not vacuum test underground storage tanks until you obtained calibrated equipment to do so. In fact, you informed me that you could not perform such tests next week. I also understood you to say that you did not know when you might be set up to vacuum test underground storage tanks.

You indicated to me that you had no experience with the vacuum testing of underground storage tanks but that you had checked with a tank manufacturer to receive assurances that their steel tanks could be vacuum tested in place underground. Did the manufacturer indicate whether or not the vacuum placed upon the tank, when coupled with external pressure from soil, ground water, and paving, exceeds the recommended testing pressures for new tanks as per NFPA 30?

Also, how does one determine the external loading pressures on the tank in every situation? Are you a professional engineer or would a professional engineer be necessary to determine what the loading pressures would be prior to and during testing?

Can you assure the vacuum testing of a structurally sound underground storage tank will not destroy the structural integrity of that vessel? Should a tank collapse, what would be the concurrent result? Would there be implosion, fire, explosion, or some other catastrophic occurrence? If the tank failed the vacuum test through collapse, would that have an isolated effect? Or would the collapse effect, or have an impact on, the tanks in close proximity to the tank being tested? Should there be damage, how much liability insurance does your firm carry and with which company?

As I indicated over the phone the engineering data we have informs us that there can be no degree of assurance given to the successful vacuum testing of tanks and still maintain the structural integrity of the vessel.

We at Southwest Tank Liners are not opposed to the vacuum testing of tanks if it can be accomplished, as the law states, according to recognized engineering practices. If you can vacuum test an underground gasoline storage tank, would you be so kind as to provide us with your engineering data, which indicates the vacuum test can be safely accomplished, without fear of destroying a structurally sound storage vessel. We would appreciate a prompt response.

Sincerely,

J. R. Sessions
Owner

JS/g

GLASS ARMOR

SOUTHWEST TANK LINERS, Inc.

OFFICE:
664 WEST MAIN ROAD — P.O. BOX 731
EL CENTRO, CALIFORNIA 92244
714 / 352-4832.

LICENSE NO. 271732

January 24, 1984

TEI
2811 Adeline
Oakland, Ca. 94606

Dear Norm,

In our several phone conversations on January 11, 1984 I inquired about vacuum testing of underground gasoline storage tanks which had been in service for a period of undetermined years.

I understood you to say that the petro-tite test is what you would recommend over a vacuum test to determine structural integrity of the tank. You indicated that you had no experience vacuum testing of existing underground storage tanks. Further, you indicated that vacuum testing of underground tanks might be feasible but prior to performing such tests there were several things to be determined. Among these were contacting the tank manufacturer to see if such a test would be recommended. Other things to be done were soils analysis to include compaction tests and so forth, and still the tank might collapse.

My questions for further clarification are: Under what, if any, circumstances would your firm vacuum test existing underground storage tanks which have been used for several years and are known to have perforations? Do you carry liability insurance to cover collapse of the tank during testing procedures. Finally, how does one determine all the variables that occur from one site to another.

We would appreciate your help in trying to clear up this issue of vacuum testing of existing underground storage tanks.

Sincerely,

G.R.Meacham

G.R.Meacham

SOUTHWEST TANK LINERS, Inc.

OFFICE:
664 WEST MAIN ROAD — P. O. BOX 731
EL CENTRO, CALIFORNIA 92244
714 / 352-4832

LICENSE NO. 271738

January 24, 1984

Mr. Sig Otto
Hales Testing Laboratories
23286 Foley
Hayward, Ca.

Mr. Otto,

In our phone conversation of January 11, 1984 we discussed vacuum testing of underground storage tanks which had contained hazardous liquids over a period of years with varied types of backfill and differing thicknesses of cover. I was told that you would not perform vacuum tests on existing underground storage tanks.

Would you please explain your reasoning upon which your answer was founded? Would the tank implode? Is there a possibility, if there were an implosion or collapse of the tank, of disturbing tanks in close proximity?

Also, is it pretty much standard practice for testing companies to carry liability insurance should one of their testing procedures cause severe real or personal damage?

We think there are many questions relational to vacuum testing of underground storage tanks which need to be asked and answered to insure safety of life and property.

We certainly appreciate your assistance.

Sincerely,

G R Meacham

UNDERWRITERS LABORATORIES INC.
333 PFINGSTEN ROAD · NORTHBROOK, ILLINOIS 60062
an independent, not-for-profit organization testing for public safety

March 20, 1984

Los Angeles City Fire Prevention Bureau
Mr. Jon Hall - Engineering/Hydrant Unit
Room 920
200 North Main Street
Los Angeles, CA 90012

Our Reference: Subject 58

Subject: Tank Lining Process and Materials

Dear Mr. Hall:

This letter is in response to your telephone request of March 19, 1984.

Underwriters Laboratories Inc. provides two options from which to choose, regarding tank lining. The first option would be to pursue a UL Listing by Report for the complete lining process, including an evaluation of the actual lining materials. The second approach would be to establish Component Recognition of the actual lining materials only. This lining Recognition would then assist any applicators who would want to submit their lining process for our Listing By Report, in that they would not need to repeat the evaluation of the lining materials.

The two options are discussed below as follows:

A. Listing By Report - UL's investigation is limited to the materials and application of the lining. The acceptability of the tank intended for lining procedures and the lining process will be the responsibility of the inspection authority having jurisdiction. The UL investigation will culminate in a Listing By Report. In this Report, UL will fully describe the condition of the test tank used as a basis for establishing our Listing. For this reason, it is important that the test tank is representative of a worst-case condition to be considered suitable for lining.

Our Listing Program consists of two basic elements; (1) Exposure testing of coupons of the liner itself and (2) Physical testing of a lined tank. The tests involved are outlined in the Appendix to this letter.

Upon satisfactory completion of all the tests and examinations specified, a Report is then prepared and sent to our Fire and Casualty Councils for comments. Listing is promulgated via a Listing Report.

B. Component Recognition - UL's investigation is limited to an evaluation of the coating material's resistance to the corrosive effects of stored flammable liquids as well as the material's resistance to permeation. Our test program for Component Recognition does not include the tests detailed in Appendix B.

For your reference, we are also enclosing a copy of Standard UL 1316 "Glass-Fiber-Reinforced Plastic Underground Storage Tanks For Petroleum Products." Please pay particular attention to Sec. 12, External Pressure Test. This test incorporates subjecting the test tank to an internal partial vacuum. This test is easily conducted utilizing a vacuum pump and mercury manometer along with the necessary vacuum and sensor lines.

If you should require further information concerning this matter, please feel free to contact us.

Very truly yours,

Steven C. Slowik

STEVEN C. SLOWIK
Associate Project Engineer
Casualty and Chemical
Hazards Department

Reviewed by:

John J. Hawley

JOHN J. HAWLEY
Engineering Group Leader
Casualty and Chemical
Hazards Department

SCS:bcp

A P P E N D I X A

Test Program For Evaluating The Suitability Of Tank Lining Systems

PHYSICAL TESTS OF LAMINATE:

METHOD

5 in. by 9 in. lining samples will be immersed in the appropriate solutions as noted below maintained at a temperature of 100°F. Specimens will also be exposed in an air circulating oven maintained at a temperature of 158°F. Periodically, after 30, 90, 180 and possibly 270 days, selected samples will be removed from the solution for evaluation with respect to flexural strength and Izod Impact.

Specimens subjected to the flexural strength test will be tested in accordance with ASTM Test Method D790, using a cross head speed of 0.01 in./min.

Specimens to be subjected to the Izod Impact Strength Test will be tested in accordance with ASTM Test Method D256.

EXPOSURE SOLUTIONS

1. Premium leaded gasoline
2. Regular unleaded gasoline
3. No. 2 fuel oil
4. ASTM REference Fuel C
5. Toluene
6. No. 6 fuel oil
7. 100 percent methanol
8. 100 percent ethanol
9. 50 percent methanol - 50 percent ASTM Reference Fuel C
10. 50 percent ethanol - 50 percent ASTM Reference Fuel C
11. 85 percent Reference Fuel C - 15 percent methanol
12. 85 percent ASTM Reference Fuel C - 15 percent ethanol

13. 70 percent ASTM Reference Fuel C - 30 percent ethanol

14. Distilled water

PERMEANCE - COATING DISSOLUTION EVALUATION:

METHOD

Coupon samples of the lining only will be bonded to glass dishes containing the solutions noted above. Prior to attaching these samples to the dishes, the thickness will be measured in the center of each quadrant and these values recorded for later use. The assemblies will also be weighed on an analytical balance. The assemblies will then be inverted and placed in a 100°F ambient chamber so that the solution will contact the test specimen.

In order to determine the rate or percent of transmission of the solution through the test specimen, the assemblies will be periodically reweighed after 30, 90, 180 and possibly 270 days. At the conclusion of the test, the thickness of the samples will be remeasured and any loss or swelling will be recorded. No permeance of dissolution of the liner material is to occur.

BONDING TO SURFACE:

METHOD

Steel coupons coated with the minimum thickness of liner material will be bonded to glass cups filled with each of the above solutions and the assemblies inverted so the solution contacts the surface. Before bonding the coupons to the cup, the hardness of the liner material will be determined. Following each of the above exposure periods, the exposed liner material will be visually examined and the hardness determined as before.

There should not be any significant softening blistering or uplift of the liner material.

COLD IMPACT:

METHOD

6 by 6 in. sheets of the liner will be conditioned for 16 h in a cold box maintained at -20°F (-29°C). Each conditioned specimen, and additional unconditioned specimens, will be clamped between two steel rings having an inside diameter of 4.25 in. and impacted once by dropping a 1.18 lb steel ball from a height of 6 ft onto the surface of the specimen.

When tested as above, acceptable samples shall not crack or show rupture of the liner.

A P P E N D I X B

Test Program For Evaluating The Structural Suitability Of Tank Lining Systems

PHYSICAL TESTS OF TANK:

Using a tank selected by you and judged by UL to met the criteria outlined in your instructions, the following test and examination will be conducted. (Note: The tank selected will become the basis for judging the acceptability of future tanks for the lining process.

a. The tank will be inspected by a representative of UL's engineering staff and a detailed description of the tank's physical condition recorded.

b. The tank will then be prepared by your personnel and lined in accordance with the lining instructions.

c. The required 5 psig leakage and 5.3 in. Hg vacuum test will then be performed, exactly as they would be conducted during an actual lining procedure.

d. The tank will then be tested for voids and/or holidays.

e. After the buried tank has been lined, the tank will be excavated and placed at ground level for visual examination of the exterior.

f. The excavation will then be prepared for anchoring the tank as required.

g. The tank will then be repositioned in the excavation and anchored (tied down) to prevent float-out.

h. The tied-down tank will then be recovered with back fill material to grade and the entire excavation flooded for a 24 h period.

i. At the end of the 24 h flooded condition, a vacuum of 5.3 in. Hg will be imposed for 1 min to simulate an additional external pressure equivalent of 6 ft of water.

j. Unless some form of metal deflector plate is used to protect the area under the fittings from a dipstick, we will also need to conduct impact tests on the interior of the tank. 2 lb steel ball will be dropped from a height equal to the tank diameter so as to impact the area under the fitting opening.

RESULTS

As a result of the testing described herein, there shall be no damage to the tank as evidenced by cracking, buckling, or deformation. The interior of the tank will again be examined using the testing procedure discussed above. There shall be no cracking of the lining material.

SWANSON SERVICE CORPORATION
ANSYS® CONSULTATION
ENGINEERING DESIGN & ANALYSIS

July 9, 1984

Mr. Jim Sessions, President
Southwest Tank Liners, Inc.
664 West Main Road
El Centro, California 92243

REF: LINING OF EXISTING STEEL UNDERGROUND STORAGE TANKS FOR FLAMMABLE AND COMBUSTIBLE LIQUIDS.

Dear Mr. Sessions:

We have reviewed the various correspondence, proposed industry standards and proposed legislation, local and state of California laws, statutes, and regulations, you provided us, regarding the suitability from a structural integrity and safe practice viewpoint, of a required vacuum test of a repaired and lined steel tank as a condition for acceptance.

We do not believe a vacuum test at 5.3 inches of mercury (2.6 PSIG ext. pressure) to be either a safe or a prudent operation on an existing steel tank, whether in-ground, excavated, or uncovered.

It is our opinion that the fact that their tanks have performed without failure for a lengthy period of time is the best indication and proof of their continued safe operation. Therefore, we are suggesting an alternative procedure which is based upon assuring that the tank has not lost a significant portion of its initial integrity. This seems to us to be the most logical and prudent course of action.

Summarized comments are attached.

Sincerely,

Alfred M. Smolen P.E.

Alfred M. Smolen, P.E.
M-11724

James William Jones, P.h.D.
P.E. 20338

18090 BEACH BLVD. • SUITE 13 • HUNTINGTON BEACH, CA 92648
(714) 964-1552 • (714) 842-3059 • (714) 842-1029

SUMMARY OF COMMENTS

1. The requirement for a vacuum test seems to have originated with the testing of new fiberglass tanks. It is proper and necessary for the manufacturer to test new tanks with a vacuum that simulates external loading conditions when the fiberglass tank is installed. It is especially important to consider this condition in the design of fiberglass tanks. An equal thickness of fiberglass composition has only about 1/30th the capability of steel plate to support external loads.

It is easily understood how this simple vacuum test could be transferred as a retroactive requirement for the acceptance of repaired or lined existing steel tanks.

2. New steel tanks are only pressure tested at 5 to 7 PSIG internal pressure by the manufacturer according to the Standard UL-58 (ANSI B137.1).

Steel tanks are not designed or tested for any vacuum condition. However, steel tanks have demonstrated satisfactory service for soil and surcharge conditions of varied installations for more than 40 years.

3. It is not reasonable or prudent, and possibly not safe, to require a structural loading test such as a vacuum test on a tank for which it was neither designed or tested when new.

Alternative methods to determine the structural integrity of an existing tank should be considered.

4. Except as a method for detecting leaks, there is no correlation between an internal pressure test and a vacuum test on a tank. A vacuum test is far more severe a test at an equal pressure because the mode of failure is by elastic buckling at a lower stress than the yield strength of the material.

5. There are important geometry and material property variables that control the capacity of a cylindrical shell to support external pressure loads.

(A). Tank Geometry Ratios:

1. Length to Diameter (L/D).
2. Diameter to Thickness (D/t).

The larger these ratios, the less the safe external pressure.

(B). Out-Of-Roundness:

1. This practicable geometrical tolerance is of great significance.
2. Research and resulting external pressure theory has been based on true cylinders.

3. The ASME Boiler and Pressure Vessel Code criteria for external pressure, is based on an out-of-round tolerance of 1% difference between any two diameters at a cross section. (e.g., TIR = 0.5% when the diameter is 96 inches. This tolerance is 1 inch difference in diameter).

(C). Material Properties:

1. The UL-58 Standard, which is the basis for manufacturing, does not specify the properties required for the steel.
2. It is customary practice to use "Mill Run" or "Mill Plate" carbon steel without specified properties.

3. The yield strength and the modulus of elasticity are important properties in design for external pressure.

(a). The yield strength for the plates used can range from 24,000 PSI to 38,000 PSI.
(b). The modulus of elasticity may range from 28,000,000 to about 30,000,000.

6. Calculations show that for tanks with large D/t and L/D ratios the critical external pressure (vacuum) can be close to 2 PSIG (about 4 inches Hg).

(A). Because research, and various theoretical design formulas that resulted, were made on cylinder models or cylinders with small D/t ratios (10 to 100), extrapolation to large diameter, thin-wall tanks (D/t 7400) is with some uncertainty.

(B). The response of the tank is different when subjected to a vacuum pressure when the tank is:

(1). In-ground and covered. The vacuum load is in addition to any ground water or surcharge load.

(2). Excavated and uncovered. The tank is no longer restrained by the soil and is free to deform.

7. It is appropriate and prudent for standards, regulations, and legislation, to contain clauses requiring the parties concerned to evaluate the suitability of an existing tank for repair and lining.

However, prevalent clauses such as:

".....with regard to the integrity of the tank....." and "If.....a serious corrosion problem exists....."

are not specific and in general wording that is without criteria. This leaves the decision regarding the integrity to the capricious opinions of the various parties involved.

A Suggested Criterion is Offered

8. It is not clear whether the intent of the vacuum test is to:

(A). Locate leaks.
(B). Check the bonding of the liner.
(C). To test the structural capability of the tank to withstand simulated external pressure loading, which was not a part of the design criteria for the tank when it was manufactured.

9. SUGGESTED ALTERNATIVE REQUIREMENTS

(A). Criteria for suitability for repair. (Instead of a vacuum pressure test).

(1). Examine the interior surfaces of the tank after cleaning, wire brushing, or sandblasting, for:

(a). Areas of corrosion
(b). Pitting

(2). Local areas of corrosion, that do not exceed 3 square inches need not be repaired provided the remaining thickness is not less than 50% of the nominal thickness of the tank when new.

(3). Pitting, as characterized by small, round holes that do not exceed 1/8th inch diameter and are spaced at least 1/2 inch apart, and do not penetrate more than twice its diameter, need not be repaired or replaced without regard for the extent of the pitting.

(4). Shells with areas of general corrosion are acceptable for lining without repair or replacement, provided the remaining thickness of sound metal is at least 85% of the thickness of the tank when new.

(5). Out-Of-Round. The cylindrical shell of the tank shall be considered acceptable provided the difference between any two diameters at any cross section does not exceed 1% of the nominal tank diameter.

(B). LEAK DETECTION.

(1). Any leaks in the tank shell or head (ends)

shall be located by any or all, of the following methods, after suitable cleaning as specified elsewhere.

(a). Visual examination.
(b). Bubble test, (local).

(1). Local pressure and soap solution.
(2). Vacuum box.

The bubble methods are described in the ASME Boiler and Pressure Vessel Code Section V, Appendix 10, Article II, and in the API-Standard 650 for oil storage tanks.

10. If a vacuum test must remain an acceptance requirement condoned by the Underwriter's laboratories, then amendment of the current standard UL-58, the regulations, and legislation, seems necessary.

(A). The Underwriter's laboratories should revise UL-58 for the manufacturer of new tanks to:

(1). Specify acceptance steels by their designation number (e.g. ASTM, AISC etc.), with required minimum property values, and mill certification and identification.

(2). Add a vacuum test to the tests required to be performed by the tank manufacturer.

(3). Add corrosion allowance (e.g., 1/16").

(4). Add appropriate label markings to include tests performed.

(B). Regulations, and legislation should acknowledge the existence of the thousands of tanks that are providing the intended service.

California Fire Chiefs Association
SOUTHERN DIVISION—FIRE PREVENTION OFFICERS' SECTION

May 5, 1983

TO: Mr. Robert Miller, President

FROM: Jonathan A. Hall, Chairman

SUBJECT: FLAMMABLE LIQUID COMMITTEE AMENDMENTS TO API'S RECOMMENDED PRACTICE #1631 FOR THE INTERIOR LINING OF EXISTING STEEL UNDERGROUND STORAGE TANKS, DATED: JANUARY 28, 1983

The Fire Prevention Officer, Flammable Liquid Committee, has reviewed the API's Recommended Practice #1631 titled "Recommended Practice for Interior Lining of Existing Steel Underground Storage Tanks." The Committee recommendations primarily include the removal of permissive language, improve tank inspection by the application of an non-destructive thickness measuring device, and finally installing cathodic protection in order to maintain structural integrity.

Included in this packet is supplemental engineering data reviewing the structural integrity of a used steel underground tank, with several example problems, which indicates confirmation with API's structural integrity criteria - (7.2 Tank Inspection Section).

The revised recommendations would be valuable as a standard or guideline for the approving authority to follow, especially with the February 14, 1983, recommended amendments to Senate Bill No. 362 by Senator Montoya.

The following is submitted for your review and comment, which pertains to the enclosed recommendations.

NOTE: All recommended changes or additions to the API Recommended Practice #1631 is indicated by double underscoring.

Very Truly yours,

Jonathan A. Hall, Chairman
Flammable Liquids Committee

JAH:myc

Enclosures

Approved 1/28/83
Revised: 4-20-83
F.P.O/F.L.C.

RECOMMENDED PRACTICE FOR THE INTERIOR LINING OF EXISTING STEEL UNDERGROUND STORAGE TANKS

1.0 Scope

This publication recommends minimum requirements for the interior lining of existing steel underground tanks used for the storage of petroleum-based motor fuels and middle distillates. In general, it outlines requirements, procedures and operating conditions to be followed by contractors, mechanics and engineers. Methods for gas-freeing tanks, removing sediment and cleaning interior surfaces of steel tanks are also included. All work must be accomplished in accordance with the applicable Federal, State and local requirements as well as accepted safety standards.

The interior lining process can be used to repair certain corroded tanks or to protect underground steel tanks from internal corrosion. The lining itself is not intended to replace the structural strength provided by the steel tank shell or prevent future external corrosion.

2.0 Permitting and Training

Where required, contractors must be approved by local authorities and all applicable permits must be obtained prior to beginning any work. Contractors shall certify that his employees and subcontractors are knowledgeable of the contents of:

It therefore is necessary that precautions are taken to eliminate the possibility of the discharge of static electricity during gas freeing procedures.

Air pressure in the tank must not exceed 5 psig. To prevent excess air pressure the vent line must be checked to make certain it is free from obstruction and traps.

Ventilation of the tank can be accomplished by one of two methods which are listed below:

a. An eductor-type air mover (see Figure 1) usually driven by compressed air, shall be properly bonded to prevent the possibility of static electricity generation and discharge. When using this method, the fill (drop) tube should remainin place to ensure ventilation at the bottom of the tank. Tanks equipped with fill (drop) tubes which are not removable shall be purged by this method. An extension shall be used to discharge vapors a minimum of twelve (12) feet above grade.

b. Diffused blown-air is illustrated in Figure 2. When using this purging method it is imperative that the air-diffusing pipe is properly bonded to prevent the discharge of a spark. Fill (drop) tubes must be removed to allow proper diffusion of the air in the tank. Air supply shall be from a compressor, which has been checked to ensure a clean air supply, free from volatile vapors. Air pressure in the tank must not exceed 5 psig.

4.5 Testing Flammable Vapor Concentrations

An important phase of the operation is the testing for flammability of the vapor in the excavated area and in the tank. Such tests are to be made with a combustible gas indicator which is properly calibrated on hexane in air and thoroughly checked and maintained in accordance with manufacturer's instructions. Persons responsible for test must be completely familiar with the use of the instrument the interpretation of the instrument's readings.

The tank vapor space is to be tested by placing the combustible gas indicator probe into the fill opening with the fill (drop) tube removed. Readings shall be taken at the bottom, middle and upper portions of the tank and the instrument should be purged with fresh air after each reading. If the tank is equipped with a non-removable fill tube, readings shall be taken through another opening. Liquid product must not enter the probe. The vapors shall be tested at the vent riser or eductor while the air mover is in operation and purging is in progress, and also in the tank itself with purge air shut off. Readings of 10 percent or less of the lower flammable limit (LFL), as indicated in the tank and at the vent riser or eductor, must be obtained before the tank is considered safe for opening.

5.0 Opening the Tank

If no manway exists, or if an existing manway is less than 24" X 24," an opening with the minimum dimension of 24" X 24" shall be cut in the top avoiding welded seams. The tank section to

be removed should be marked with chalk and a hole drilled with an explosion-proof (such as air-driven) drill at one corner of th section. After the hole is drilled, the tank vaoprs must agai tested by inserting the meter probe into the hole to verify th vapor concentration does not exceed 10 percent LFL.

NOTE: It is important that the purging, air ventilation an testing continue throughout the entire lining operation. During the tank cutting operation minimal air pressure shall be maintained to prevent a blow out.

The tank shall be cut using an explosion-proof (such as air-driven) saber saw or snipper using lubricating oil to reduce friction, heat and possible sparks. Prior to the final cut, the plate shall be supported to prevent its falling into the tank.

6.0 Tank Entry

Before entering tanks, the procedures described in API Publications 2015, "Cleaning Petroleum Storage Tanks", and 2015A, "A Guide for Controlling the Lead Hazard Associated with Tank Entry and Cleaning", shall be followed. This includes checking the oxygen content inside the tank with a properly calibrated oxygen monitor.

At all times, personnel entering the tank shall be equipped with a NIOSH approved positive pressure air supplied equipment with full face mask enclosure and safety harness connected to a safety line held by an attendant outside the tank. Oil and water-resitant rubber or neoprene boots and gloves shall be worn. Clothing shall cover the arms, legs, torso and head of tank entry personnel. Disposable clothing, impervious to product, is preferred.

Clothing saturated with product shall be removed immediately. All personnel working inside the tank shall be familiar with ANSIZ117.1, "Confined Spaces Safety".

Tests with the combustible gas and oxygen indicator shall be performed continuously in the tank to determine that the vapor concentration is below 10% of the LFL; when the concentration reaches 10% personnel should evacuate from the tank. It should be recognized that if the tank is perforated, product or vapors which have leaked into the soil may re-enter the tank through perforation. The vent lines shall remain clear and obstructed to allow continuous ventilation. All other lines and openings shall be plugged or capped off to ensure no liquids or vapors may enter the tank during the lining operation.

7.0 Preparation of Tank Interior

7.1 Sludge Removal

Sludge accumulation on the bottom of the tank must be removed and placed in tightly sealed containers. It must be disposed of in accordance with local, State and Federal regulations, which may require mandatory documentation as well as safe disposal.

NOTE: Tank sludge and scale are potentially hazardous as they may contain tetraethyl lead vapors which can be inhaled, or toxic liquid tetraethyl lead which may be absorbed through the skin. If the dry internal surface of the tank is scraped, the resulting atmosphere may contain dangerous quantities of lead.

The quantity of lead in the tank atmosphere should be checked using a lead in air analyzer.

7.2 Tank Inspection

During inspection, the entire surface of the tank shall be inspected using a light fixture approved for Class I, Division 1, Group D hazardous locations. The structural integrity of the tank shall be determined by an approved non-destructive thickness measuring device. The entire tank interior shall be inspected using the approved wall thickness measuring device on a two foot grid pattern and also a visual inspection. All questionable tank wall areas (less than 1/8" wall thickness) will be tap tested with a ballpeenhamm determine extent of metal loss. A lined tank's structu integrity is dependent on the steel tank shell; therefo repairable tank will be identified by the following guidelines:

Should this be a brass ham[illegible]?

1. A tank having an open or split no longer than three (3) inches; or
2. A tank having a perforation no larger than one and one-half (1-1/2) inch in diameter except under the gauging opening where the perforation may be no larger than two and one half (2-1/2) inches in diameter; or
3. A tank with less than five (5) perforations (none larger than one half inch in diameter) in any one square foot area.

4. A tank with less than twenty (20) perforations (none larger than one half inch in diameter) in a five hundred (500) square foot area.

Tanks that exceed any of the above shall not be interior lined unless approved by the authority having jurisdiction. ~~and shall be removed from the ground~~

To determine adherence to these guidelines, perforations seams shall be brass ballpeen hammered (before and after abra blasting) to remove thin metal and obtain structurally sound edges. Perforations and seam splits shall be reamed until the edges o the hole or split are a minimum of 1/8" thick.

7.3 Surface Preparation

All blasting personnel should be familiar with the h described in API Publication 2027, "Ignition Hazards Involved in Abrasive Blasting of Tanks in Service". All perforations shall be plugged with boiler pugs or hydraulic cement prior to abrasive blasting; seams may be plugged with hydraulic cement.

CAUTION: BEFORE ABRASIVE BLASTING, THE TANK SHALL BE CHECKED AGAIN WITH THE COMBUSTIBLE GAS INDICATOR TO ENSURE THAT NO FLAMMABLE VAPORS HAVE ENTERED THE TANK.

BLASTING CLEANING OPERATIONS SHALL NOT BE CONDUCTED ON SURFACES THAT WILL BE WET AFTER BLASTING AND BEFORE APPLICATION OR WHEN THE SURFACE IS LESS THAN 5°F ABOVE DEW POINT, OR WHEN THE RELATIVE HUMIDITY OF THE AIR IS GREATER THAN 85%.

The entire internal tank surface shall be abrasive blasted completely free of scale, rust and foreign matter to SSPC-SP 5-63 (S.S.S.a3) (White Metal Blast Cleaning). When sand is

used as the blast material a minimum of 90 psi and 18 mesh grit material shall be used during blasting.

NOTE: A White Metal Finish is defined as a surface with a gray-white uniform metallic color, roughened to form 1-1/2 Mil anchor profile pattern for coatings. The surface, when viewed without magnification, shall be free of all oil, grease, grit, visible mill-scale, rust, corrosion products, oxides, paint or other foreign mater.

Abrasive blast operators shall wear NIOSH/MSHA approved hoods connected to sources of clean air. Bonding shall be provided between the blasting nozzle and the work surface, or else the blasting shall be effectively grounded to provide equivalent protection from static charges. Separators and traps shall be used to remove oil and water from compressed air. Following completion of the abrasive blasting operation, the surface shall be brushed with a clean hair, bristle, or fiber brush, blown with compressed air, then vacuumed. Boiler plugs and hydraulic cement plugs shall be covered with epoxy or polyester then covered with fiberglass cloth (minimum 1-1/2 oz./yd^2, silane treated) which overlaps all sides of the plug with a minimum of two (2) inches. If a perforation in a seam is present, the perforation shall be sealed with hydraulic cement then covered with glass cloth and resin, overlapping the perforation by six (6) inches.

8.0 Application of Lining

Prior to the application of lining material, a 1/4" steel reinforcing plate rolled to the contour of the tank and with minimum dimensions of 8" by 8" shall be installed under the fill (drop) tube

and gauging tube. This plate shall be covered with fiberglass cloth imbedded in resin. The blast-cleaned surface shall be coated within eight hours after blasting and before any visible rusting occurs. The coating shall be cured thoroughly to the manufacturers specification and checked for air pockets and pinholes using an approved Holiday Detector. Manufacturer's instructions are to be followed on handling and mixing of resin compounds, and these compounds shall be applied to the entire interior surface of the tank by the manufacturer or his designated distributor following the specified method of application. If a heater is used to accelerate the curing process, all other work which might release flammable vapors must be halted and the heating unit ~~must~~ shall be attended whenever it is in operation. The coating shall be cured thoroughly to the manufacturer's specifications and checked for air pockets, and pinholes using a Holiday Detector. If any exceptions are found they shall be repaired manufacturer's specifications. Contractor shall protect the coated surfaces from contamination by foreign matter. The coating thickness shall be checked with an Elcometer Thickness Gauge or equivalent and tested for hardness using a Barcol Hardness Tester or equivalent to ensure compliance with manufacturer's specifications.

Personnel safety and clothing requirements must comply with Section 6.0.

9.0 Tank Closing

If an opening has been cut, the tank shall be sealed as follows:

a. A 1/4" thick steel cover plate, rolled to the contour of the tank shall be made to overlap the hole at least two

inches on each side (e.g., should measure at least 28" by 28" if manhole was cut 24" by 24").

b. The cover shall be used as a template to locate 3/4" diameter holes not exceeding five inch centers, one inch from the edge of the cover.

c. The cover plate shall be sandbalsted to White Metal Sa both sides and the entire inside surface shall be coated with coating material to act as a gasket.

d. Before the coating on the cover cures, the cover shall be fastened to the tank using 1/2" (minimum) diameter bolts. The bolt shafts are to be placed through the holes from the inside of the tank and held in place by spring clips, then fastened with lock washers and nuts as illustrated in Figure 3.

e. After being bolted to the tank, the cover plate and surrounding tank surface shall be properly sandblasted, coated with coating material and allowed to cure before back filling the hole.

10.1 Tank Tightness Testing

Before backfilling, the tank shall be tightness tested using locally acceptable methods. Particular attention should be paid to the cover plate and all exposed fittings.

11.0 Corrosion Protection

Interior lined underground tanks shall be protected by an engineered, properly installed and maintained cathodic protection system. Approved by local authority.

NOTE: All changes or additions to the API Recommended Practice #1631 is indicated by double underscoring. Such changes are recommended by the California Fire Chief's Association, Fire Prevention Officer's Southern Section, Flammable Liquids Committee.

Inspector II, Jonathan Hall, Chairman
Los Angeles City Fire Department
Bureau of Fire Prevention (213) 485-5977
200 North Main Street, Room 920
Los Angeles, CA 90012

UNIFORM FIRE CODE
STANDARD NO. 79-6

INTERIOR LINING OF EXISTING STEEL UNDERGROUND STORAGE TANKS

CHAPTER I

GENERAL PROVISIONS

SCOPE:

Sec. 79.601 This standard sets forth the minimum requirements for the interior lining of existing steel underground tanks utilized for the storage of flammable and combustible liquids. Included under the scope of this standard is the repair of leaking tanks and protection of tanks from corrosion through the application of a lining material and cathodic protection. The lining itself is not intended to replace the structural strength provided by the steel tank shell or prevent future external corrosion. ~~This standard addresses only these issues directly related to fire prevention and control.~~ It is the intent of this standard to recognize that all applicable safety and health laws, regulations and ordinances shall be complied with in conjunction with the provisions set forth in this standard and that the contractor is knowledgeable of its content as well as the referenced material listed herein.

DEFINITIONS:

Sec. 79.602

APPROVED - SEE U.F.C.

CLASS I, DIVISION I, GROUP D - SEE ELECTRICAL CODE

COMBUSTIBLE LIQUID - SEE U.F.C.

FLAMMABLE LIQUID - SEE U.F.C.

LABELED - SEE U.F.C.

LISTED - SEE U.F.C.

LOWER FLAMMABLE LIMITS - The minimum concentration of vapor ~~to~~ in air or oxygen below which propagation of a flame ~~will~~ does not occur ~~in the presence of an ignition source.~~ on contact with a source of ignition.

~~NATIONALLY RECOGNIZED TESTING LABORATORY - A testing laboratory, inspection agency, or other organization concerned with product evaluation that maintains periodic inspection of production of labeled equipment or materials and by whose labeling is indicated compliance with nationally recognized standards or tests to determine suitable usage in a specific manner.~~

STATIC ELECTRICITY - The electrification of materials through physical contact and separation, and the various effects that result from the positive and negative charges so formed - particularly where they constitute a fire or explosion hazard.

SELF CONTAINED BREATHING APPARATUS - A portable respiratory protective device designed to protect the wearer from an oxygen-deficient or ~~an otherwise~~ other hazardous atmosphere. ~~that has its own air or oxygen supply~~ It is normally designed to be worn by the user by means of an incorporated harness assembly with its own supply of air, oxygen, or oxygen-generating material. It is normally equipped with a full face piece and is approved by NIOSH (National Institute of Occupational Safety and Health).

VAPOR AREA - SEE U.F.C.

PERMITS & PLANS:

Sec. 79.603 (a) Prior to engaging in any activities relating to the alteration or repair of tanks or equipment in connection with the storage, handling, use or sale of flammable or combustible liquids regulated by the Uniform Fire Code, a permit shall be applied for from the Chief. No on-site work shall be initiated until a permit has been issued. (See Article 4, U.F.C.)

(b) At the time a permit is applied for, the applicant shall submit all certificates, specifications, licenses, certificates of insurance and such other documents required by this standard and the Chief.

MATERIALS:

Sec. 79.604 (a) Materials used for the interior lining of steel underground tanks shall be approved by the Chief.

(b) Guidelines for approval may include the following:

1) Materials ~~listed by a nationally recognized testing laboratory for the intended use,~~ accepted as a result of an investigation and tests conducted using accepted principles or tests by national authorities, technical or scientific organizations for the intended use; or

2) ~~Acceptable~~ Materials shall ~~satisfy the following requirements certified by the manufacturer and be~~ certified by the manufacturer as satisfying the following requirements in accordance with nationally recognized and accepted standards, principles and tests.

a. Adhesion

Coatings, when applied to properly-prepared steel surfaces must maintain adhesion (bond) to the tank while in its designated service for the period of the tank lining's life.

b. Immersion Tests

Representative coating samples shall be tested to determine the compatibility ~~of the lining material~~ with stored products.

Samples shall be immersed in the liquids listed below at either 38°C (100°F) for periods of one, three and six months, or 23°C (74° F) for periods of one, three, six and twelve months. The 23° C (74° F) exposure is more realistic and is preferred.

LIQUIDS FOR IMMERSION TESTING:

Intended Service

~~ASTM Reference Fuel C~~
~~Unleaded Gasoline~~
~~Leaded Gasoline~~
~~No. 2 Fuel Oil or Diesel Oil~~
~~Toluene~~
~~Xylene~~
~~Gasohol (50% ethanol)~~
~~Gasohol (50% methanol)~~
~~Distilled Water~~

Unleaded Gasoline
Leaded Gasoline
No. 2 Fuel Oil or Diesel Oil
Gasohol (10% ethanol)
Gasohol (5% methanol)

Additional Liquids

(These liquids are not intended services; however, the liner materials are to be tested in these liquids to further demonstrate the liner's immersion resistance.)

ASTM Reference Fuel C
Toulene
Xylene
Distilled Water

Upon completion of each immersion period, samples shall be tested in accordance with the following:

TEST	PURPOSE
ANSI-N5.12-1983 — Protective Coatings (Paint) for the Nuclear Industry, Section 6.4 Adhesion	Bonding Strength
ASTM D790-81 — Flexural Properties of Unreinforced and Reinforced Plastics and Electrical Insulating Materials	Flexural Strength
ASTM D2794-69 — Resistance of Organic Coatings to the Effects of Rapid Deformation (Impact)	Impact Resistance
ASTM D2583-31 (Model 934-1) — Indentation Hardness of Rigid Plastics By Means of a Barcol Impressor	Barcol Hardness

or

Barber Coleman GYZJ (Model 935)
ASTM D543-67 Procedure 1 -- Resistance of Plastics
To Chemical Reagents

Weight and
Dimension Changes

Each test sample shall be visually examined after each immersion period and shall exhibit no evidence of peeling, blistering, surface wrinkling or roughing.

~~Properties after the final immersion period shall be a minimum of 30% of the original properties before immersion in toulene, xylene, and distilled water; and 50% for immersion in all other listed liquids, with a stable trend indicating no further long-term deterioration.~~ With the exception of the ASTM D543 weight and volume change tests, properties after the final immersion period shall be a minimum of 30% of the original properties before immersion in toulene, xylene, and distilled water; and 50% for immersion in all other listed liquids. Weight and volume changes shall be no greater than 5% after the final immersion period.

NOTE: Before storage is permitted of liquids other than those listed, test results demonstrating the liner will meet the above requirements in those liquids must be submitted by the manufacturer.

CHAPTER 2

GENERAL SAFETY REQUIREMENTS

Sec. 79.605 (a) Site Preparation. Prior to excavation, the site shall be safeguarded from all sources of ignition for an area of 25 feet in all directions until vapor free. All open flame and spark producing equipment within the area shall be shut down. Barricades and warning signs reading "Flammable - No Smoking" shall be provided in accordance with the directions of the Chief.

~~(b) Clearance. A clearance from the Chief shall be obtained prior to proceeding with any work that may generate or produce flammable or combustible vapors.~~

~~(c)~~ (b) Fire Extinguishers. Two portable A:B:C type fire extinguishers each having a rating not less than 80B:C shall be provided on the site in accordance with U.F.C. Standard No. 10-1 for extra (high) hazard.

~~(d)~~ (c) Emergency Communications. A dependable method, ~~approved by~~ acceptable to the Chief, ~~of notifying the fire department shall be maintained,~~ shall be available for notifying the fire department in the event of a fire or other emergency.

~~(e)~~ (d) Static Electricity Control. Adequate precautions shall be taken to prevent the accumulation and discharge of static electricity.

~~(f)~~ (e) Electrical Equipment. All electrical equipment, as ~~defined in the electrical code,~~ used in the area must be ~~(explosion-proof) Class I, Group D, Division I or approved for the service,~~ meet the requirements of Class I Group D Division 1 (explosion proof), or approved for the service.

PREPARATION FOR OPENING THE TANK:

Sec. 79.606. Tank Isolation. Before any work on the exterior surface of the tank begins, tanks must be inspected to determine how the tank is to be isolated. If a tank is equipped with a manifold vent or fill line or syphon assembly, necessary measures must be taken to isolate each tank(s). All product and vapor recovery piping shall be disconnected and blanked off and the bungs of the tank plugged. The vent for the tank being lined should be isolated from vents for other tanks which may still be in service. This may require a temporary separate vent for the tank being lined. All electrical switches supplying electrical current to submerged pumps and/or other equipment connected to the tank shall be disconnected and locked.

Sec. 79.607. Removal of Liquid Product. As much product, water and sediment as possible shall be removed using explosion-proof or air driven pumps. Pump motors and suction hoses must be bonded to the tank to prevent electrostatic ignition hazards. A small quantity of water can be pumped into the tank to float the product from a low spot where it can be pumped from the tank. Also, where possible, fill (drop) tubes shall be removed to allow for maximum removal of all liquid and to provide for adequate air ventilation.

Sec. 79.608 Removal of flammable vapors (gas freeing) (a) The tank shall be thoroughly purged ~~only with~~ with only air to remove flammable vapors. ~~of residue capable of producing flammable vapors.~~ The concentration of flammable vapors in a tank may go through the flammable range before a safe atmosphere is obtained. It

therefore is necessary that precautions are taken to eliminate the possibility of the discharge of static electricity during gas freeing procedures.

Air pressure in the tank must not exceed 5 psig. To prevent excess air pressure the vent line must be checked to make certain it is free from obstruction and traps.

Ventilation of the tank can be accomplished by one of two methods which are listed below.

(1) An eductor-type air mover (see Appendix C, Figure 1) usually driven by compressed air, shall be properly bonded to prevent the possibility of static electricity generation and discharge. When using this method, the fill (drop) tube should remain in place to ensure ventilation at the bottom of the tank. Tanks equipped with fill (drop) tubes which are not removable shall be purged by this method. An extension shall be used to discharge vapors a minimum of twelve (12) feet above grade.

(2) Diffused blown-air is illustrated in Appendix C, Figure 2. When using this purging method it is imperative that the air-diffusing pipe is properly bonded to prevent the discharge of a spark. Fill (drop) tubes must be removed to allow proper diffusion of the air in the tank. Air supply shall be from a compressor, which has been checked to ensure a clean air supply, free from volatile vapors. Air pressure in the tank must not exceed 5 psig.

Sec. 79.609. Testing Flammable Vapor Concentrations. An important phase of the operation is the testing for flammability of the vapor in the excavated area and in the tank. Such tests are to be made with a combustible gas indicator which is properly calibrated on hexane in air and thoroughly checked and maintained in accordance with manufacturer's instructions. Persons responsible for testing must be completely trained and thoroughly familiar with the use of the instrument and the interpretation of the instrument's readings.

The tank vapor space is to be tested by placing the combustible gas indicator probe into the fill opening with the fill (drop) tube removed. Readings shall be taken at the bottom, middle and upper portions of the tank and the instrument shall be purged with fresh air after each reading. If the tank is equipped with a non-removable fill tube, readings shall be taken through another opening. Liquid product must not enter the probe. The vapors shall be tested at the vent riser or eductor while the air mover is in operation and purging is in progress, and also in the tank itself with purge air shut off. Readings of 10 percent or less of the lower flammable limit (LFL), as indicated in the tank and at the vent riser or eductor, must be obtained before the tank is considered safe for opening.

79.610. Opening the Tank. If no manway exists, or if an existing manway is less than 24 inches in diameter, an opening with the minimum dimension of 24" x 24" shall be cut in the top. The tank section to be removed should be marked square with chalk and a hole drilled with an explosion-proof (such as air-driven) drill at one corner of the section using lubricating oil to reduce friction, heat and possible sparks. After the hole is drilled, the tank vapors must again be tested by inserting the meter probe into the hole to verify that the vapor concentration does not exceed 10 percent LFL.

NOTE: It is important that the purging, air ventilation and testing continue throughout the entire lining operation. During the tank cutting operation minimal air pressure shall be maintained to prevent a blow out.

The tank shall be cut using an explosion-proof (such as air-driven) saber saw or snipper using lubricating oil to reduce friction, heat and possible sparks. Prior to the final cut, the plate shall be supported to prevent its falling into the tank.

Sec. 79.611. Tank Entry. Before entering tanks, the procedures described in API Publications 2015, "Cleaning Petroleum Storage Tanks", and 2015A, "A Guide for Controlling the Lead Hazard Associated with Tank Entry and Cleaning", should be followed. This includes checking the oxygen content inside the tank with a properly calibrated oxygen monitor. At all times, personnel entering the tank shall be equipped with positive pressure air supplied equipment with full face enclosure and safety harness connected to a safety line held by an attendant outside the tank. A self-contained breathing apparatus shall be immediately available to the attendant for rescue operations or other emergencies.

Oil and water-resistant rubber or neoprene boots and gloves shall be worn. Clothing shall cover the arms, legs, torso and head of tank entry personnel. Disposable clothing, impervious to product, is preferred. Clothing saturated with product shall be removed immediately. All personnel working inside the tank should be familiar with ANSI Z117.1, "Confined Spaces Safety".

Tests with the combustible gas indicator and oxygen monitor should be performed periodically in the tank to ascertain that the tank vapors and oxygen content are in the safe range. It should be recognized that if the tank is perforated, product or vapors which have leaked into the soil may re-enter the tank through a perforation. The vent line shall remain clear and unobstructed to allow continuous ventilation. All other lines and openings shall be plugged or capped off to insure no liquids or vapors may enter the tank during the lining operation.

79.612. Sludge Removal. Sludge accumulation on the bottom of the tank must be removed and placed in tightly sealed containers. It must be disposed of as soon as practical in accordance with local, State and Federal regulations, which may require mandatory documentation as well as safe disposal.

NOTE: Tank sludge and scale are potentially hazardous as they may contain tetraethyl lead vapors which can be inhaled, or toxic liquid tetraethyl lead which may be absorbed through the skin. If the dry internal surface of the tank is scraped, the resulting atmosphere may contain dangerous quantities of lead. The quantity of lead in the tank atmosphere should be checked using a lead-in-air analyzer.

CHAPTER 3

TANK INSPECTION AND STRUCTURAL CERTIFICATION

INTERIOR SURFACE PREPARATION FOR INSPECTION:

Sec. 79.613. Surface Preparation. All abrasive blasting personnel should be familiar with the hazards described in API Publication 2027, "Ignition Hazards Involved in Abrasive Blasting of Tanks in Service". All perforations shall be plugged with boiler plugs or hydraulic cement as necessary to permit abrasive blasting; seams may be plugged with hydraulic cement.

CAUTION: BEFORE ABRASIVE BLASTING, THE TANK SHOULD BE CHECKED AGAIN WITH THE COMBUSTIBLE GAS INDICATOR TO ENSURE THAT NO FLAMMABLE VAPORS HAVE ENTERED THE TANK.

BLAST CLEANING OPERATIONS SHALL NOT BE CONDUCTED ON SURFACES THAT WILL BE WET AFTER BLASTING AND BEFORE APPLICATION OR WHEN THE SURFACE IS LESS THAN 5°F ABOVE DEW POINT, OR WHEN THE RELATIVE HUMIDITY OF THE AIR IS GREATER THAN 85%.

The entire internal tank surface shall be abrasive blasted completely free of scale, rust and foreign matter. Abrasive blast operators shall wear approved helmets connected to sources of clean air. Bonding should be provided between the blasting nozzle and the work surface, or else the blasting nozzle should be effectively grounded to provide equivalent protection from static charges.

Sec. 79.614. Tank Inspection. During inspection, the entire surface of the tank shall be visually inspected using a light fixture approved for Class I, Division I, Group D hazardous locations. The structural integrity of the tank shall be ~~determined~~ certified by an ~~approved non-destructive thickness measuring device,~~ a registered professional engineer, unless waived by the Chief. ~~The entire tank interior shall be inspected using the approved wall thickness measuring device on a two foot grid pattern and also a visual inspection. All questionable~~ In addition, tank wall areas ~~(less than 1/8" wall thickness)~~ will be tap tested with a ballpeenhammer, by sounding, to determine ~~extent~~ areas of questionable metal loss. All questionable areas will be tested for actual metal thickness. A ~~lined tank's structural integrity is dependent on the steel tank shell; therefore~~ a repairable tank will be identified by the following guidelines:

1. A tank having a single open seam or split no longer than three (3) inches in areas other than within six (6) inches of head to shell seam; or

2. A tank having a single perforation no larger than one and one-half (1-½) inch in diameter except under the gauging opening where the perforation may be no larger than two and one-half (2-½) inches in diameter; or

3. A tank with less than five (5) perforations (none larger than one-half inch in diameter) in any one square foot area; or

4. A tank with less than twenty (20) perforations (none larger than one-half inch in diameter) in a five hundred (500) square foot area.

To determine adherence to these guidelines, perforations and seams shall be brass ballpeen hammered (before and after abrasive blasting) to remove thin metal and obtain structurally sound edges. Perforations and seam splits shall be reamed until the edges of the hole or split are a minimum of 1/8" thick. Tanks that exceed any one of the above shall not be interior lined. Tanks having a leak in a joggle or lap joint shall not be repaired. The structural integrity of the tank shall be certified by a registered engineer unless waived by the Chief.

CHAPTER 4

APPLICATION OF LINING AND TANK CLOSING

Sec. 79.615. Application of Lining. Prior to the application of lining material, boiler plugs and hydraulic cement plugs shall be covered with epoxy or polyester then covered with fiberglass cloth (minimum 1½ oz./yd^2, silane treated) which overlaps all sides of the plug with a minimum of two (2) inches. If a perforation in a seam is present, the perforation shall be sealed with hydraulic cement then covered with glass cloth and resin, overlapping the perforation ~~of~~ by six (6) inches. A ¼" steel reinforcing plate rolled to the contour of the tank and with minimum dimensions of 8" by 8" shall be installed under the fill (drop) tube and gauging tube. This plate shall be covered with fiberglass cloth imbedded in resin. The blast-cleaned surface should be coated within eight hours after blasting and before any visible rusting occurs. Only those lining materials meeting the specifications in Section 79.604 shall be used. Manufacturer's instructions are to be followed on handling and/or preparation of the lining materials and these materials shall be applied to the entire interior surface of the tank by the manufacturer or his designated distributor following the specified method of application, to the designated thickness and at the recommended application temperature. If a heater is used to accelerate the curing process, all other work which might release flammable vapors must be halted and the heating unit must be attended whenever it is in operation. The coating shall be cured thoroughly to the manufacturer's specifications and checked for air pockets, and pinholes using an approved Holiday Detector. If any exceptions are found they shall be repaired to manufacturer's specifications. Contractor shall protect the coated surfaces from contamination by foreign matter. The coating thickness shall be checked with an Elcometer Thickness Gauge or equivalent and tested for hardness using a Barcol Hardness Tester or equivalent to ensure compliance with manufacturer's specifications.

Sec. 79.616. Tank Closing. If an opening has been cut, the tank shall be sealed as follows:

(a) A ¼" minimum thick steel cover plate, but not less than the original size plate, rolled to the contour of the tank, shall be made to overlap the hole at least two inches on each side.

(b) The cover shall be used as a template to locate 3/4" diameter holes not exceeding five inch centers, one inch from the edge of the cover and tank opening.

(c) The cover plate shall be abrasive blasted to white metal on both sides, and also shall include the outside of the opening under tank cover, and the entire inside cover surface shall be coated with coating material to act as a gasket.

(d) Before the coating on the cover cures, the cover shall be fastened to the tank using ½" (minimum) diameter bolts. The bolt shafts are to be placed through the holes from the inside of the tank and held in place by spring clips, then fastened with lock washers and nuts as illustrated in Figure 3.

(e) All bare surfaces shall be coated on the interior and exterior with the coating material.

(f) After being bolted to the tank, the cover plate and surrounding tank surface shall be abrasive-blasted to white metal, coated with coating material and allowed to cure before backfilling the hole.

CHAPTER 5

TESTING

Sec. 79.617. Pressure Testing. Before backfilling, the tank shall be tightness tested in accordance with U.F.C. Sec. 79.605 (bc). Particular attention should be paid to the cover plate and all exposed fittings.

~~Sec. 79.618. Vacuum Testing. Before backfilling, the tank shall be tightness tested at a vacuum equivalent to the burial depth of the tank times 1.95.~~

CHAPTER 6

EXTERNAL CORROSION PROTECTION

Sec. 79.619. Cathodic Protection. Interior lined underground tanks shall be cathodically protected in accordance with U.F.C. Sec. 79.603.

APPENDIX A

REFERENCE MATERIALS

ANSI Z117.1	Confined Spaces Safety
A.P.I. PUBLICATION 2015	Cleaning Petroleum Storage Tanks
A.P.I. PUBLICATION 2015A	A guide for Controlling the Lead Hazard Associated with Tank Entry and Cleaning
A.P.I. R.P. 2003	Protection Against Ignitions Arising Out Of Static, Lightning and Stray Currents
A.P.I. R.P. 2027	Ignition Hazards Involved In Abrasive Blasting of Tanks In Service.
N.F.P.A. STANDARD 117	Static Electricity
N.F.P.A. STANDARD 327	Cleaning Small Tanks and Containers

APPENDIX E

INSPECTOR'S CHECKLIST

DATE: __ PERMIT NO. __

BUSINESS NAME: _____

ADDRESS: _____ TELEPHONE NO. ____

PRODUCTS STORED: __, __, ___

CONTRACTOR: _____

ADDRESS: _____ TELEPHONE NO. ___

PRODUCTS STORED: __, __, __;

CONTRACTOR: _____

ADDRESS: _____, TELEPHONE NO. _____

COATING MATERIAL: _____ MFG: _____

APPLICATION RATIO: _____ (Gals per Sq.Ft.)
GALS. USED: _____

SAFETY:

Barricades Provided ____ "Flammable - No Smoking" Signs Posted _____ Fire Extinguishers On Site Emergency Communications Approved ___

Employees Wearing Proper Attire and Footwear____

Approved Breathing Apparatus On Site _____

Combustible Gas Indicator On Site _____ Oxygen Monitor ____

All Equipment & Electrical Appliances Approved__

Tank & Vent Lines Isolated _____ Vent Lines Connected & Open ____

Proper Containers For Sludge Storage ___

Sand Blasting Equipment Bonded ____

TANK INSPECTION:

Sonic Testing completed ____ Results _____

Tank Repairable _____ Tank Condemmed Remarks:

_____

Penetrations Reamed Correctly _____ Holiday Test Performed _____

Thickness & Hardness Tests Performed _____

Pressure Tested ___ Vacuum Tested _____

Cathodic Protection Installed _____ Type _____

#38 HS

GLASS ARMOR

SOUTHWEST TANK LINERS, Inc.

OFFICE:
664 WEST MAIN ROAD — P. O. BOX 731
EL CENTRO, CALIFORNIA 92244
619 / 352-4832
LICENSE NO. A418129

October 15, 1984

Harold Singer
Water Quality Control Board
Division of Technical Services
P. O. Box 100
Sacramento, California 95801

Mr. Singer;

For your further information regarding the interior coating of storage facilities, find enclosed the following:

- letter to Mr. Paul Meli, Bridgeport Chemical Corporation, dated October 9, 1984
- letter to Mr. Jim Sessions, Southwest Tank Liners, dated July 9, 1984
- Technical Information Bulletin-Specifications, Bridgeport Chemical Corporation
- Six Month Data Generated on GA 27P in Various Tests Fuels, Bridgeport Chemical Corporation
- Report of Test, United States Testing Company, Inc., dated May 25, 1983

If I can be of any further assistance, do not hesitate to contact me at 1-800-452-2000.

Sincerely,

J. R. Sessions
President

Enclosures

SWANSON SERVICE CORPORATION
ANSYS® CONSULTATION
ENGINEERING DESIGN & ANALYSIS

July 9, 1984

Mr. Jim Sessions, President
Southwest Tank Liners, Inc.
664 West Main Road
El Centro, California 92243

REF: LINING OF EXISTING STEEL UNDERGROUND STORAGE TANKS FOR FLAMMABLE AND COMBUSTIBLE LIQUIDS.

Dear Mr. Sessions:

We have reviewed the various correspondence, proposed industry standards and proposed legislation, local and state of California laws, statutes, and regulations, you provided us, regarding the suitability from a structural integrity and safe practice viewpoint, of a required vacuum test of a repaired and lined steel tank as a condition for acceptance.

We do not believe a vacuum test at 5.3 inches of mercury (2.6 PSIG ext. pressure) to be either a safe or a prudent operation on an existing steel tank, whether in-ground, excavated, or uncovered.

It is our opinion that the fact that their tanks have performed without failure for a lengthy period of time is the best indication and proof of their continued safe operation. Therefore, we are suggesting an alternative procedure which is based upon assuring that the tank has not lost a significant portion of its initial integrity. This seems to us to be the most logical and prudent course of action.

Summarized comments are attached.

Sincerely,

Alfred M. Smolen P.E

Alfred M. Smolen, P.E.
M-11724

James W. Jones

James William Jones, P.h.D.
P.E. 20338

18090 BEACH BLVD. • SUITE 13 • HUNTINGTON BEACH, CA 92648
(714) 964-1552 • (714) 842-3059 • (714) 842-1029

SUMMARY OF COMMENTS

1. The requirement for a vacuum test seems to have originated with the testing of new fiberglass tanks. It is proper and necessary for the manufacturer to test new tanks with a vacuum that simulates external loading conditions when the fiberglass tank is installed. It is especially important to consider this condition in the design of fiberglass tanks. An equal thickness of fiberglass composition has only about 1/30th the capability of steel plate to support external loads.

It is easily understood how this simple vacuum test could be transferred as a retroactive requirement for the acceptance of repaired or lined existing steel tanks.

2. New steel tanks are only pressure tested at 5 to 7 PSIG internal pressure by the manufacturer according to the Standard UL-58 (ANSI B137.1).

Steel tanks are not designed or tested for any vacuum condition. However, steel tanks have demonstrated satisfactory service for soil and surcharge conditions of varied installations for more than 40 years.

3. It is not reasonable or prudent, and possibly not safe, to require a structural loading test such as a vacuum test on a tank for which it was neither designed or tested when new.

Alternative methods to determine the structural integrity of an existing tank should be considered.

4. Except as a method for detecting leaks, there is no correlation between an internal pressure test and a vacuum test on a tank. A vacuum test is far more severe a test at an equal pressure because the mode of failure is by elastic buckling at a lower stress than the yield strength of the material.

5. There are important geometry and material property variables that control the capacity of a cylindrical shell to support external pressure loads.

(A). Tank Geometry Ratios:

1. Length to Diameter (L/D).
2. Diameter to Thickness (D/t).

The larger these ratios, the less the safe external pressure.

(B). Out-Of-Roundness:

1. This practicable geometrical tolerance is of great significance.
2. Research and resulting external pressure theory has been based on true cylinders.

3. The ASME Boiler and Pressure Vessel Code criteria for external pressure, is based on an out-of-round tolerance of 1% difference between any two diameters at a cross section. (e.g., TIR = 0.5% when the diameter is 96 inches. This tolerance is 1 inch difference in diameter).

(C). Material Properties:

1. The UL-58 Standard, which is the basis for manufacturing, does not specify the properties required for the steel.
2. It is customary practice to use "Mill Run" or "Mill Plate" carbon steel without specified properties.

3. The yield strength and the modulus of elasticity are important properties in design for external pressure.

(a). The yield strength for the plates used can range from 24,000 PSI to 38,000 PSI.
(b). The modulus of elasticity may range from 28,000,000 to about 30,000,000.

6. Calculations show that for tanks with large D/t and L/D ratios the critical external pressure (vacuum) can be close to 2 PSIG (about 4 inches Hg).

(A). Because research, and various theoretical design formulas that resulted, were made on cylinder models or cylinders with small D/t ratios (10 to 100), extrapolation to large diameter, thin-wall tanks (D/t 7400) is with some uncertainty.

(B). The response of the tank is different when subjected to a vacuum pressure when the tank is:

(1). In-ground and covered. The vacuum load is in addition to any ground water or surcharge load.

(2). Excavated and uncovered. The tank is no longer restrained by the soil and is free to deform.

7. It is appropriate and prudent for standards, regulations, and legislation, to contain clauses requiring the parties concerned to evaluate the suitability of an existing tank for repair and lining.

However, prevalent clauses such as:

".....with regard to the integrity of the tank....." and "If.....a serious corrosion problem exists....."

are not specific and in general wording that is without criteria. This leaves the decision regarding the integrity to the capricious opinions of the various parties involved.

A Suggested Criterion is Offered

8. It is not clear whether the intent of the vacuum test is to:

(A). Locate leaks.
(B). Check the bonding of the liner.
(C). To test the structural capability of the tank to withstand simulated external pressure loading, which was not a part of the design criteria for the tank when it was manufactured.

9. SUGGESTED ALTERNATIVE REQUIREMENTS

(A). Criteria for suitability for repair. (Instead of a vacuum pressure test).

(1). Examine the interior surfaces of the tank after cleaning, wire brushing, or sandblasting, for:

(a). Areas of corrosion
(b). Pitting

(2). Local areas of corrosion, that do not exceed 3 square inches need not be repaired provided the remaining thickness is not less than 50% of the nominal thickness of the tank when new.

(3). Pitting, as characterized by small, round holes that do not exceed 1/8th inch diameter and are spaced at least 1/2 inch apart, and do not penetrate more than twice its diameter, need not be repaired or replaced without regard for the extent of the pitting.

(4). Shells with areas of general corrosion are acceptable for lining without repair or replacement, provided the remaining thickness of sound metal is at least 85% of the thickness of the tank when new.

(5). Out-Of-Round. The cylindrical shell of the tank shall be considered acceptable provided the difference between any two diameters at any cross section does not exceed 1% of the nominal tank diameter.

(B). LEAK DETECTION.

(1). Any leaks in the tank shell or head (ends)

shall be located by any or all, of the following methods, after suitable cleaning as specified elsewhere.

(a). Visual examination.
(b). Bubble test, (local).

(1). Local pressure and soap solution.
(2). Vacuum box.

The bubble methods are described in the ASME Boiler and Pressure Vessel Code Section V, Appendix 10, Article II, and in the API-Standard 650 for oil storage tanks.

10. If a vacuum test must remain an acceptance requirement condoned by the Underwriter's laboratories, then amendment of the current standard UL-58, the regulations, and legislation, seems necessary.

(A). The Underwriter's laboratories should revise UL-58 for the manufacturer of new tanks to:

(1). Specify acceptance steels by their designation number (e.g. ASTM, AISC etc.), with required minimum property values, and mill certification and identification.

(2). Add a vacuum test to the tests required to be performed by the tank manufacturer.

(3). Add corrosion allowance (e.g., 1/16").

(4). Add appropriate label markings to include tests performed.

(B). Regulations, and legislation should acknowledge the existence of the thousands of tanks that are providing the intended service.

SWANSON SERVICE CORPORATION
ANSYS® CONSULTATION
ENGINEERING DESIGN & ANALYSIS

October 9, 1984

Mr. Paul I. Meli, Jr.
Executive Vice President
Bridgeport Chemical Corporation
2610 N.E. 5th Avenue
Pompano Beach, Florida 33064

Dear Mr. Meli:

RE: Underground Storage Tanks, Repair by Glass Fiber Reinforced Epoxy Coating System, Bridgeport Chemical Corporation No. GA27P ARMOR SPRAY.

The data and specifications received from Bridgeport Chemical Corporation and from Mr. J.R. Sessions, Southwest Tank Liners, Inc., El Centro, California for the GA27P ARMOR SPRAY, a glass fiber reinforced epoxy coating system, have been reviewed for conformance with the API Publication 1631 (1983) "Recommended Practice for Internal Lining of Existing Steel Underground Storage Tanks", and have been found, in my opinion, to be acceptable. The enclosed "Check List of Items Covered" was used in this evaluation.

The following documents you submitted are signed with my Registered Professional Engineer's stamp and dated October 8, 1984, for identification only, since the tests were not witnessed by me:

1. Technical Information Bulletin (10/83), "Specifications, Glass Armor Repair of Gasoline Storage Tanks (Gasohol):

"GA27P ARMOR SPRAY"

(Gasohol Coating)

By Bridgeport Chemical Corporation, including:

Annex A, "Personnel Equipment Required" (8/80)
Annex B, "Definitions" (8/80

18090 BEACH BLVD. • SUITE 13 • HUNTINGTON BEACH, CA 92648
(714) 964-1552 • (714) 842-3059 • (714) 842-1029

SWANSON SERVICE CORPORATION
ANSYS® CONSULTATION
ENGINEERING DESIGN & ANALYSIS

Annex C, "Tests for Determining Coating Cure" (8/80)
Annex D, (Compliance, Personnel Safety) (8/80)
Annex E, "Tests for Determining Coating Thickness" (no date)
Drawing 1, "Glass Armor Aerator" (8/80)
Drawing 2, "Seal for a Buried Gasoline Storage Tank" (8/80)

2. Test report, Bridgeport Chemical Corporation, (not dated).
"Six Month Data Generated on GA27P in Various Tests Fuels, by Paul I. Meli, Jr. (3 Pages)

3. Report of Test No. 82650-1, May 25, 1983
"Epoxy Coating GA27P"
By United States Testing Company, Inc.
Engineering Services Division.
1415 Park Avenue
Hoboken, N.J. 07030 (6 Pages)

4. Report of Test No 84800, June 28, 1984
"Epoxy Coating System - GA27P"
By: United States Testing Company, Inc.
Engineering Services Division
1415 Park Avenue
Hoboken, N.J. 07030 (9 Pages)

cc: Mr. J.R. Sessions
Southwest Tank Liners, Inc.
664 West Main Road
P.O. Box 731
El Centro, California 92243

Alfred M. Smolen

REGISTERED PROFESSIONAL ENGINEER
ALFRED M. SMOLEN
No. M11724
MECHANICAL
STATE OF CALIFORNIA

18090 BEACH BLVD. • SUITE 13 • HUNTINGTON BEACH, CA 92648
(714) 964-1552 • (714) 842-3059 • (714) 842-1029

SWANSON SERVICE CORPORATION
ANSYS® CONSULTATION
ENGINEERING DESIGN & ANALYSIS

October 9, 1984

CHECK LIST OF ITEMS COVERED

For Epoxy Coating System GA-27P
Bridgeport Chemical Company, Inc.

1. Common Name of Product
   a) Epoxy Coating System
   b) GA-27P ARMOR SPRAY - (Gasohol Coating)

2. Specifications:
   a) API Publication 1631 (1983)
      Recommended Practice for Interior Lining of Existing Underground Storage Tanks.
   b) Bridgeport Chemical Company.
      Technical Information Bulletin (10/83)

      Specification: Glass Armor Repair of Gasoline Storage Tanks, (Gasohol).

3. Composition of Product
   (Ref. Doc. No. 1, Page 1)

4. Strength and Material Properties
   (Reports of tests. Ref. Doc. No. 3 and 4)

5. Limitations On Use

   Compatible Fluids
   (Reports of Tests. Ref. Doc. No. 1, 2, 3 and 4)

6. Preparation Procedures
   (Ref. Doc. No. 1)

7. Application Procedures
   (Ref. Doc. No. 1)

8. Quality Control Techniques
   (Ref. Doc. No. 1)

9. Curing Times and Temperatures
   (Ref. Doc. No. 1)

10. Field Thickness Testing Procedures
    (Ref. Doc. No. 1)

18090 BEACH BLVD. • SUITE 13 • HUNTINGTON BEACH, CA 92648
(714) 964-1552 • (714) 842-3059 • (714) 842-1029

SWANSON SERVICE CORPORATION
ANSYS® CONSULTATION
ENGINEERING DESIGN & ANALYSIS

11. Field Hardness Testing Procedures
    (Ref. Doc. No. 1)

12. Method of Determining Whether An Existing Tank is Repairable.
    (Ref. Doc. No. 1)

13. Results of Standard Tests
    (Ref. Doc. No. 2, 3, and 4)

14. Provisions For Personnel Safety
    (Ref. Doc. No. 1)

18090 BEACH BLVD. • SUITE 13 • HUNTINGTON BEACH, CA 92648
(714) 964-1552 • (714) 842-3059 • (714) 842-1029

GLASS ARMOR

Epoxy Resins

TECHNICAL INFORMATION BULLETIN

SPECIFICATIONS

GLASS ARMOR REPAIR OF GASOLINE STORAGE TANKS (GASOHOL)

"GA27 P ARMOR SPRAY"

(GASOHOL COATING)

REGISTERED PROFESSIONAL ENGINEER
ALFRED M. SMOLEN
No. M11724
MECHANICAL
STATE OF CALIFORNIA

Referenced Document No. 1
Swanson Service Corporation
Report October 9, 1984

BRIDGEPORT CHEMICAL CORPORATION
2610 N.E. 5th Avenue
Pompano Beach, Florida 33064
305/781-3700

TECHNICAL INFORMATION BULLETIN
THE GA27 P (ARMOR SPRAY)

GA27 P is a specially formulated, chemically resistant, epoxy resin-based product, structurally reinforced with glass fibers. It is specifically designed for building a new tank in a steel storage tank, using Bridgeport Chemical's FUSION BONDING process. It eliminates corrosion from within the tank and retards corrosion from outside elements in the soil.

This technical bulletin outlines the specifications of Bridgeport Chemical Corporation's Glass Armor method for solving the extremely serious, costly, and hazardous problem of replacing leaking underground gasoline storage tanks in the service station.

Gasoline by itself cannot cause corrosion, but water and oxygen that gasoline picks up does the damage. At high-product temperatures, gasoline is more heavily saturated with air and water than at lower temperatures. Then as the product cools, the solubility of water in gasoline decreases and droplets of water form and settle out on the tank metal. When the gasoline temperatures drop from 140°F. to 80°F., as much as 0.5 lbs. of water comes from 100 lbs. of hydrocarbon (about 1,616 lbs. of gasoline). These figures indicate a 6,000 gallon tank could have approximately 23 gallons of water in each load.

The rate of corrosion also depends on the type of gasoline and the type of crude used in the refining process. The most highly aromatic fuels have a greater water solubility and are more corrosive (premium is more corrosive than regular which in turn is more corrosive than kerosene).

CHEMICAL PROPERTIES:

Films cured for 7 days @ 75°F. are unaffected by the following reagents after 30 days immersion @ 75°F.

Reagent	Visible Affects
ASTM reference Fuels A and C	No Affect
Unleaded Gasoline	No Affect
Premium Leaded Gasoline	No Affect
Diesel Fuel	No Affect
Benzene	No Affect
Toluene	No Affect
Xylene	No Affect
Mineral Spirits	No Affect
Gasohol 10% ethyl alcohol	No Affect
Gasohol 50% ethyl alcohol	No Affect
Ethyl alcohol	No Affect
Isopropyl alcohol	No Affect
Propyl alcohol	No Affect
Tertiary butyl alcohol (TBA)	No Affect
10% Ethanol gasoline	No Affect
10% Methanol gasoline	No Affect

15% Methanol gasoline	No Affect
30% Methanol gasoline	No Affect
50% Methanol gasoline	No Affect
100% Methanol	No Affect
Distilled water	No Affect
10% Sulfuric acid	No Affect
Sodium Hydroxide 10-30%	No Affect
5% Sodium Chloride	No Affect

The Glass Armor epoxy resins have long been recognized by corrosion engineers as a superior material unique in properties that make them one of the most valued tools to combat corrosion.

Bridgeport Chemical Corporation, who pioneered the process of lining leaking gasoline tanks, has factory trained franchise applicators serving the petroleum industry from coast to coast. All Glass Armor applicators follow this specification using the GA 27P line of epoxy coatings.

GA 27P bonded to the interior surface of the steel storage tank results in a structurally strong tank built within a tank. This material gives a solid glass hard inner protective wall to the leaking vessel. The corrosion-proof inner tank seals off the leaks and becomes completely bonded to the entire tank.

The Glass Armor procedure for the repair of underground gasoline storage tanks include the following:

1. Isolating the tank.
2. Gas freeing the tank.
3. Entering the tank.
4. Cleaning and sandblasting the tank.
5. Application of GA 27P.
6. Sealing the tank.

To be certain that all Applicators take all the necessary action required to succeed in this program, the following specifications have been written.

1. SCOPE:

This specification covers the requirements for the Glass Armor process for the repair of gasoline storage tanks. This specification outlines the method to be followed for the safeguarding of gasoline tank atmospheres for the purpose of conducting the Glass Armor Process for such tanks. It outlines the methods to be followed for flushing the interior of gasoline tanks for the removal of combustible vapor preparatory to the removal of sediment, rust, etc. Instructions are included for cleaning interior surfaces of steel tanks, and for the application of protective coating. This specification outlines in general the requirements, procedure, and operating conditions for the above work to be followed by Bridgeport Chemical Corporation's Franchised Applicators and Dealers. All work must be done in accordance with the current Federal Occupational Safety and Health Administration Codes. (OSHA)

2. SITE INSPECTION:

The Applicator must visit the site, ascertain local conditions and scope of work. Where necessary, approval from local authorities should be obtained prior to application. Where no such approval exists, the applicator must notify Bridgeport Chemical Corporation in writing. See Annex D.

3. SPECIFICATION FOR COATING:

Glass Armor GA27 P shall be applied to the entire inner surface to be protected on the storage vessel.

4. INSPECTION OF STORAGE VESSEL:

The storage vessel should be inspected by a competent person to determine how long the tank has been in service, approximate amount of gasoline and sediment in the tank, and the physical condition of the tank. If the tank does not appear structurally sound and has wide open seams or extremely porous metal, the tank should not be glass armor coated. Sources of ignition should be removed from surrounding area. Work should not be started if the direction of the wind might carry vapors into areas where they could produce a hazardous condition. All open flame and spark equipment within the vapor hazard area should be shut down. **Electric equipment used in the area must be explosion-proof, i.e., Class 1 D. Division 1.** See Annex A and B.

4-1 Isolation of the Vessel:

The tank must be completely isolated before any work begins. This means suction lines, pumps, and other connecting lines should be blanked.

5. REMOVAL OF FLAMMABLE VAPORS:

5-1 Displacement With Air: Purging and Ventilating:

Gas freeing the tank is accomplished by purging with fresh air, and a safe atmosphere can be maintained by continuous ventilation. In air purging, the concentration of vapor in air in the tank may go through the flammable range before a safe atmosphere is obtained, therefore all precautions shall be taken to insure that the air moving apparatus be bonded to the tank in order to minimize the hazard of ignition.

Ventilation of the tank is accomplished by the use of air movers of the eductor type. Air movers of this type are actuated with compressed air, fans and blowers by electric motors or air, or gasoline motor driven. We recommend the use of the Bridgeport Chemical Purging Aerator Method. **(Motor must be explosive proof.)**

5-2 Bridgeport Chemical Purging Method

Each applicator will insure all precautions will be taken as per these instructions, and the GA27 P specifications for the repair of steel storage tanks.

A. Preparations:

1. Remove as much gasoline as possible. (Use explosion-proof pumps and lines). Lines at the pump should be closed and blanked so that no vapors or gasoline can issue from the lines during the maintenance operation.

2. Syphon lines must be cut as well as any connections to a common fill line.

3. A small quantity of water can be pumped into the tank to float the gasoline from a low spot to where it can be removed from the tank.

B. Purging:

The tank will be thoroughly purged for the removal of flammable vapor atmostphere, or any residue capable of producing flammable vapors in the tank and connected distribution lines, so that subsequent natural ventilation will not result in the reinstatement of a flammable atmosphere, prior to any storage vessel.

A safe working atmosphere within the tank is obtained as follows:

Glass Armor Purging Aerator Method

1. Set up the Glass Armor Aerator as shown in drawing #1. Safety precautions must be taken as follows:

   a. Suitable grounding must be provided to prevent a spark from igniting any gasoline vapors in the immediate area.

   b. Air pressure in the tank must not exceed Five (5) psi. Air supply must be from a diesel compressor that has been safety checked to assure a clean air supply without volatile flammable fumes feeding the air hose. (Diesel or equivalent).

2. To provide a suitable ground against static electricity, be sure the copper purging pipe is resting on the bottom of the tank, and that the "Ground" wire from the copper pipe is attached to the fill line and to the nearest water meter.

3. To prevent excess air pressure from building up in the tank, set the pressure reducing valve to 5 psi until you are positive that the vent is free and open.

4. Increase air volume to remove as much air as possible without building up pressure in the tank.

SPECIAL CAUTION:

Occasionally tanks are equipped with inner fill pipes. It is necessary to make sure that the air from the copper purging pipe is going down the long fill line, into the tank, and out the vent. The air should not be blowing back out the fill pipe, thus, not purging the tank. If exhaust from the vent line is negligible, but considerable from the fill pipe, the open area around the pipe leading into the fill can be plugged up with rags to force air out the vent pipe.

The fill line should not be plugged in this manner unless the two conditions mentioned above exist. (That is, tanks equipped with inner fills and vent not exhausting adequately). See drawing #1 - Glass Armor Aerator.

6. TESTING THE VAPOR CONCENTRATION:

The test for flammability is the most important phase of the entire operation. These tests are made with a combustible gas indicator such as the Model 5 Explosive Meter (Mine Safety Appliance Company). Persons responsible for testing must be thoroughly instructed in handling and reading the vapor indications. Bridgeport Chemical Corporation technical personnel will check, approve, and supervise all newly trained personnel.

6-1 Testing Procedure

Testing the tank for vapors is accomplished in the following manner.

1. The MSA Model 5 Explosive Meter must be thoroughly checked as per instruction manual.

2. The meter will be checked by placing the probe in a known source of gasoline vapors such as a gas tank. After the meter reading has been checked, the probe is cleared with fresh air.

3. The tank will be checked by placing the probe in the fill line and taking separate readings at the bottom, middle, and upper portions of the tank, clearing the probe after each reading: **Be sure and prevent liquid product from entering the probe.** (Check MSA instruction manual.) The vapors should be tested with the air mover temporarily off at the tank. However, periodic tests should be made at the vent rise, while the air mover is in operation and purging is in progress.

4. When the meter reading is 40% of the Lower Explosive Limit (LEL) range at the three levels of the tank, a number of readings of the vapor content leaving the tank at the vent riser should be taken.

5. Safe reading of 20% or less of the Lower Explosive Limit (LEL) range as indicated on the Model 5 Explosive Meter must be obtained at both the tank and vent riser before the tank is considered safe.

6. See Annex B for further information.

7. OPERATING PROCEDURE

7-1 Opening the Tank

After it is determined that a safe atmosphere has been established, the tank may be opened. If cutting and drilling are necessary, the tools, where possible, are to be air operated or run by explosion-proof motors and bonded to the tanks. It is noted that some tools are not available with air operated or explosion-proof motors and when used, testing for flammable vapors in the work area becomes even more critical. Therefore, when using electric tools with open switches, the work area is to be tested continuously during the operation.

Where no hatch exists, a manhole may be cut out approximately 22" x 22". This is accomplished by outlining the area to be cut out with chalk, and drilling out two holes in the diagonal corners of the square with an air driven drill. (The cover plate can be used as a template). When the first hole is drilled into the tank the test probe will be placed into the hole to again verify that the tank is still safe. It is important that purging is continued throughout this entire operation. The test reading should be lower than 20% Lower Explosive Limits (LEL) on the test meter. The tank should then be cut by an air driven sniper or with an explosive-proof saber saw or equivalent.

A man with complete positive air displacement equipment with face mask and the proper protective clothing can then enter the tank. Tests with the explosive meter should be performed by the man in the tank to ascertain that the tank vapors are in the proper Lower Explosive Limits (LEL) range.

7-2 Removal of Sludge

The volatile lead compounds in the sludge and in the scale are a source of danger to workers. Sludge is a potential hazard because it is a source of Tetraethyl lead vapors which may be inhaled, because liquid tetraethyl lead in contact with the skin may be absorbed into the body and is highly poisonous. If the dry internal surface of the tank is scraped, the resulting atmospheres may contain dangerous quantities of lead. Poor health and fatigue accentuates the foregoing hazards. No one with a punctured ear drum should enter such a tank because vapor laden air will pass through this abnormal opening. Tanks of bulk storage capacity over 50,000 gallons must have a safety inspector from Du Pont or Ethyl Corporation approve entry into a tank. Before entering all leaded gasoline tanks follow the procedure as prescribed in American Petroleum Institute Bulletin #RP2015: "Cleaning Petroleum Storage Tanks."

Employees entering the tank and those handling tank sludge will be clothed so that arms, legs, head and torso are protected from contact with the tank residue and the coating resins. They shall wear oil and water resistant boots and gloves. In addition, protective respiratory equipment providing positive air pressure in a full facepiece mask will be worn by those entering the tank before and during Bottom Sediment and Water removal, sandblasting, and removal of residue and during the coating application. Protective equipment shall be provided, used and maintained in a sanitary reliable condition. Persons working in the tank when respirators are required will be equipped with safety harnesses and safety lines and standby employees.

Pumps used for the removal of Bottom Sediment and Water shall be explosion-proof. Shovels used to remove solid sludge shall be of the non-ferrous or sparkproof type.

7-3 Inspection of Tank Prior to Surface Preparation

Inspection of the interior may be made with one of several forms of internal inspection lamps or flashlights approved for Class I, Group D-Hazardous Locations.

Visual inspection of the tank should be made to insure that no liquid gas or fumes are reentering the tank. Any foot valves shall be removed or covered tightly with plastic and taped. Submerged pumps should be isolated. Suction lines should be removed and openings plugged with rubber test plugs or equivalent. The vent opening should be left clear freely exposed from the inside.

During inspection, the extent of corrosion (both internal and external) should be determined. The entire interior surface of the tank shall be visually inspected. Areas around holes or suspected severe corrsion and other randomly selected areas within the tank should be tested by tapping with a ballpeen hammer to determine structural integrity of the steel shell. A tank having extremely porous steel, a split seam or holes too large to be repaired, shall not be Glass Armor lined. In all cases, sufficient steel shell must remain intact (after sandblasting) to provide structural support for the interior lining.

The following guidelines shall be utilized to determine whether a tank may be repaired:

a. A tank having an open seam or split no longer than 3 inches, or
b. Perforation no larger than 1½" diameter except under the gauging opening where the perforation may be no larger than 2½ inches in diameter, or
c. A tank with less than five (5) perforations none larger than ½ inch in diameter) in any one square foot area,
d. A tank with less than twenty perforations (none larger than ½ inch in diameter) in a 500 square foot area.

Tanks that exceed any of the above should not be interior lined unless approved by an authority having jurisdiction.

To determine adherence to these guidelines, perforations and seams shall be ballpeen hammered (before and after sandblasting) to remove thin metal and obtain structurally sound edges. Perforations and seam splits shall be reamed out until the edges of the hole or split are a minimum of ⅛" thick.

7-4 Surface Preparation of Storage Tanks

All holes should be plugged with plugs or screws of non-corrosive plastic (e.g. nylon or teflon), epoxy putty, or hydraulic cement. Seams may be plugged with hydraulic cement or lead wool. The use of plugs and hydraulic cement are used only as temporary measures to prevent water products, fumes, foreign matter from entering the tank during sandblasting.

The entire tank shall be sandblasted completely free of rust, scale, and foreign matter to SSPC-SP5-63 "White Metal Blast".

SANDBLASTING: "BEFORE BEGINNING THE SANDBLASTING OPERATION, IT IS IMPERATIVE THAT THE AIR HOSE BE CHECKED TO BE SURE THAT CLEAN AIR FREE OF FLAMMABLE VAPORS IS COMING OUT OF THE AIR HOSE." After the surface has

been sandblasted to White Metal, it shall be brushed with clean brushes made of hair, bristle or fiber, blown off with compressed air or cleaned by vacuum. Adequate separators and traps shall be used to remove oil and water from compressed air. The blast cleaned surface shall be coated within 8 hours after blasting when practical. But in any event, not later than 24 hours after blasting and also before any visible rusting occurs. Contact Bridgeport Chemical Corporation for recommended sandblasting equipment and procedures.

After sandblasting, all perforations and or open/split seams shall be permanently repaired as follows:

a. All holes less than ¾" diameter shall be plugged with plugs or screws made of non-corrosive plastic (e.g. nylon or teflon). The plugs shall be covered with Glass Armor and fiberglass cloth, which overlaps all sides of the plug a minimum of 2".

b. Holes up to 1½" diameter shall first be plugged with either steel or plastic plugs. In addition, a 6"x6" steel plate (10 gauge min.) must be placed over the flattened plug and extend all sides by 2". This steel plate shall be sandblasted to white metal on both sides and bonded to the tank with Glass Armor epoxy. A laminate of epoxy and fiberglass cloth shall cover this plate on all sides by a minimum of 2".

c. An open or split seam (less than 3" long) shall be repaired using either fiberglass or steel plate epoxied in place and overlapping the seam by a minimum of 6" on all sides.

Sandblasting Safety Precautions:

1. Blast operators shall wear U.S. Bureau of Mines approved helmet connected to a source of clean compressed air.

2. Blast hose shall be grounded to dissipate static charges.

7-5 Application of GA27 P Protective Coating

GA27 P is a specially developed heavy built coating, designed specifically for special spray equipment which makes the coating easily applicable. A GA27 P unit will cover 40 square feet at approximately 125 mil thickness. The following procedure should be carefully followed.

1. Prepare the substrate for coating.

2. To assure the proper coverage, the tank must be marked off with chalk into 40 square foot sections.

3. Mix activator and resin for 3 minutes using mixing blade #A275. Scrape sides of can with a long pointed trowel and mix for another minute, total mixing time, 4 minutes. Material must be thoroughly mixed and uniform in color.

4. Place mixed material under spray gun pump and spray tank until completely coated.

5. Product temperature should be 80° F. - 90° F. for best spray pattern.

6. Heat cure with hot air (Union Chill Mat Indirect Heater Ultramatic III) for three hours or until fully cured to obtain maximum chemical and physical properties.

The coated area must be checked for any pinholes with a Holiday Detector, and coated over, if any are found. The coating thickness should be checked with an Elcometer Thickness Gauge or Branson Coatingage. Follow the instructions on standardizing the Elcometer Model Mark I Type A Scale 14, 0-¼". Check various areas of the tank for proper thickness as per meter reading. If any areas are not proper thickness, apply GA to the proper thickness. See Annex E.

Curing the coating completely before replacing the product into the tank is accomplished by either of the following methods:

Fast Cure:

1. The ambient air within the tank is heated to 140° F.-160° F. by means of a 250,000 BTU indirect heater. This is accomplished by placing a flexible hose from the heater inside the opening and directing it at either end first for a 1-1½ hours, then at opposite end for an equal time or until coating cured. (See 4 below) Check thoroughly before closing tank.

2. Allow to air cure 72 hours at 90° F.

3. Allow to air cure 7 days at 77° F. ambient.

4. See Annex C for cure testing procedures.

7-6 Coverage

Theoretically, 1 pound cover 0.94 square feet @125 mils:

GA27P unit covers: 45 sq. ft. @ 125 mils
37 sq. ft. @ 150 mils
30 sq. ft. @ 187 mils

A 10% allowance should be made for product loss due to pores of steel and product left in the can.

The average coating thickness should be 150 mils with a minimum thickness of 125 mils, and a maximum thickness of 187 mils.

Where no hatch cover exists, and a manhole has been cut out, the tank should be sealed in the following way:

The cover plate should overlap the hole at least 2" on each side and should measure at least 27"x27". Fastening the cover to the tank can be accomplished by punching ¾" diameter holes on 5" centers, 1" from the edge. The cover should be rolled to the contour of the tank. (See cover specifications drawing #2).

An alternate cover plate may be used and should overlap the hole at least 2" on each side and should measure 24"x24". The hole may be cut to 18"x18". Using 18 bolts, follow the same procedure as mentioned on previous page.

Whenever authorities require, the tank may be tested by either method as follows:

1. After the tank has been closed, but before the excavation is filled, the tank may be tested for tightness with air pressure at not less than 3 pounds per square inch and not more than 5 poundsper square inch. The test pressure shall hold, without fluctuation, for a period of 1 hour.

2. A Hydrostatic test may be applied, but the test pressure should be not less than 3 pounds per square inch and not more than 5 pounds per square inch.

8. OPERATIONS AFFECTING EXISTING WORK

The operation shall be conducted with care not to damage work which is to remain in place, and all existing work damaged by such operations shall be rectified promptly without additional expense to the owner.

Every reasonable precaution is taken in the manufacture of all Glass Armor products and compilation of data to assure that they comply with Bridgeport Chemical Corporation's exacting standards. As, however, the effectiveness of each product depends in part, upon correct methods of use, no guarantee of such products or data can be given.

ANNEX A

PERSONNEL EQUIPMENT REQUIRED:

a. Personnel working on such tanks will wear rubber boots, fresh air masks, life lines, and clean clothing with no metal buttons or fittings. A copper rivet will be driven into the heels of rubber boots to provide a ground or discharge of static electricity which may accumulate on personnel wearing safety equipment.

b. Fresh air will be supplied to the mask through a hose with a positive displacement air blower to the windward side of manhole in tank. Adequate power operated blowers are responsible for the air supply until personnel wearing mask have left tank and removed face piece. Securely attach one end of rope to the harness or body of the individual with the other end being held by an attendant stationed on the tank to assist in his removal, if necessary.

EQUIPMENT REQUIREMENTS:

a. Canister type masks will not be used in lieu of masks equipped with hose supplying fresh air.

b. Use non-ferrous tools for cleaning surfaces of rust, sediment, etc.

c. Use only cotton cloths for cleaning purposes. Other cloths tend to generate static electricity.

d. Lights of approved explosion-proof type only will be used.

e. Discontinue cleaning operations while electric storm is threating or in progress.

f. Personnel on this operation are prohibited from wearing wool, nylon, silk, rayon, and/or other static producing materials. Cotton cloth, is the only recommended type of clothing.

ANNEX B

DEFINITIONS:

EXPLOSIVE LIMITS: There is a minimum concentration of flammable vapor in air or oxygen below which propagation of flame does not occur on contact with source of ignition. There is also a maximum proportion of vapor or gas in air above which propagation of flame does not occur. "These boundary line mixtures of vapor or gas in air, which if ignited, will just propagate a flame, are known as the lower and upper explosive or flammable limits." Usually expressed in terms of percent by volume of gas in air.

FLAMMABILITY RANGE: The difference between the lower and upper explosive or flammable limits expressed in percent of vapor in air is known as the "flammable range." For example, the lower limits of flammability of gasoline, at ambient temperature, is approximately 1.4% vapor in air by volume, while the upper limit is about 7.6%. By difference, the explosive or flammability limit of gasoline is 6.2%.

Maximum Permissable 0_2 percentages and minimum inert gas concentration for aircraft fuel tanks.

TYPE OF FUEL	MAXIMUM 0_2	MINIMUM $C0_2$
Aviation Gas 115		
145	11.6	33.5
JP 3	11.4	35.0
JP 4	11.4	34.8

COMBUSTIBLE GAS INDICATORS: Readings from most indicators give the percentage of the lower flammable limit of the vapor in an atmosphere. Readings may be misleading where the atmosphere contains less than 5% by volume of 2_2 in an inert container.

ANNEX C

TESTS FOR DETERMINING COATING CURE

Either of the two following test methods may be used to check the degree of cures of the applied coating.

1. M-14 Pencil Hardness Test

General: Pencils of increasing hardness are drawn across the film until one is found which will not cut the film but will leave a black pencil mark on the surface whereas the next harder pencil will cut through the film without leaving a black mark. The number of the harder pencil is then used to express or designate the hardness.

Procedure: Strip wood from the lead for a distance of approximately ¼", using care not to nick the lead. Square the exposed lead by a gentle rotary motion against a No. 400 carbide abrasive paper.

Hold pencil in writing position, that is, at approximately 45°, and push forward against the film. Use pressure short of breaking the lead. By turning pencil after a test. a new edge is available for use and three or four trials may be made with one dressing of the lead.

Clean the marks with a soap or artgum eraser. Any marring of the surface, visible at an oblique angle in strong light, indicates that the pencil is harder than the film. The hardness is expressed as the grade of next softer pencil.

GA27 P should have a pencil hardness between 3H and 4H.

* 2. Barcol Hardness Tester GYZJ935 (Barber Colman Company, Rockford, Illinois) "This method, however, leaves a void in the coating, therefore the tested area must be recoated to eliminate this void."

The design of the Impressor is such that operating experience is not essential. It is only necessary to exert a light pressure against the instrument to drive the spring loaded indenter into the material to be tested. The indenter must be perpendicular to the surface. The instrument can be used in any position and in any space that will allow for the operator's hand. The hardness reading is instantly indicated on the dial which is conveniently divided into one hundred graduations. No waiting, preloading or separate measurements. On very soft materials, highest reading should be used since cold flow permits spring loaded indenter to continue penetration.

Barcol on GA27 P should read 65-75

* Preferred method

ANNEX D

The contractor's supervisor will be familiar and comply with the procedures established in the following publications:

1. Recommended Practice for Cleaning Petroleum Storage Tanks (API RP2015 - 2nd Edition 1976)

2. Cleaning Small Tanks and Containers NFPA 327,1976

3. Recommended Practice for Protection Against Ignitions arising out of static, lighting, and stray currents. (API RP2003, 3rd Edition 1974)

4. NIOSH "Working in Confined Spaces" - December, 1979

The contractor is also to be familiar and comply with the rules and regulations of the Occupational Safety and Health Administration as published in the Federal Register, Volume 36, No. 105, Part II, and in particular:

Subpart H -	Hazardous Materials par. 1910, 106 Flammable and Combustible Liquid
Subpart I -	Personal Protective Equipment par. 1910, 132 general requirements par. 1910, 134 respiratory protection
Subpart J -	General Environment Controls par. 1910, 145 specifications for accident prevention signs & tags
Subpart L -	Fire Protection par. 1910, 157 portable fire extinguishers

ANNEX E

TESTS FOR DETERMINING COATING THICKNESS

Use a thickness gauge such as an Elcometer Model 1, Type A Scale 14, 0-¼" (Ferro Corporation, Cleveland, Ohio) or equivalent.

Follow the manufacturers instructions for standardizing the thickness gauge.

Check the various areas of the coated tank for proper film thickness as per meter reading. If any areas are not proper thickness, apply Glass Armor coating to the proper thickness and allow to cure.

GLASS ARMOR AERATOR

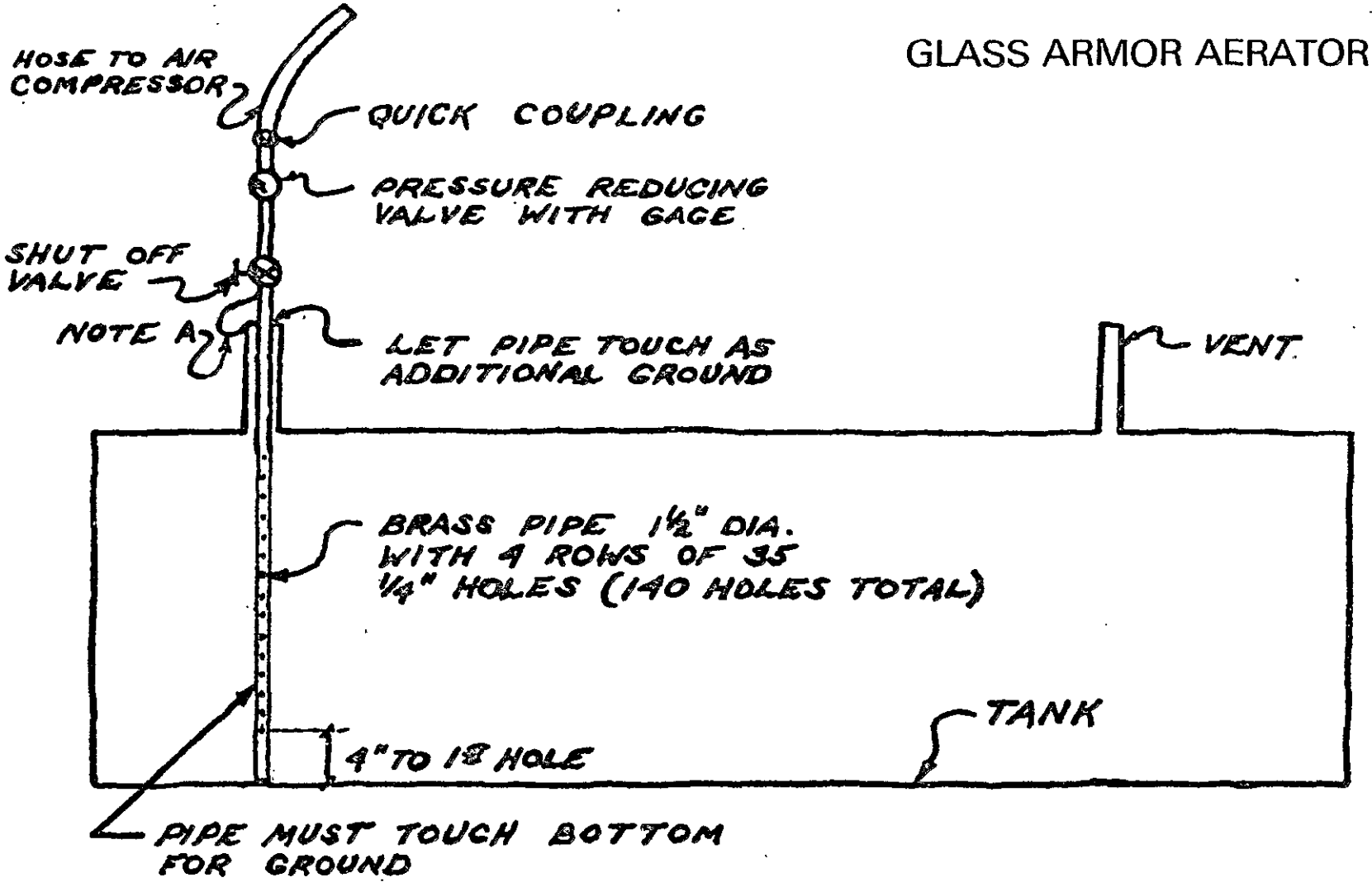

NOTE A GROUND CABLE BRAZED TO PIPE MUST BE CLAMPED TO FILL PIPE. USE 12 GAUGE WIRE FROM PIPE TO WATER PIPE.

DRAWING - 1

8/80

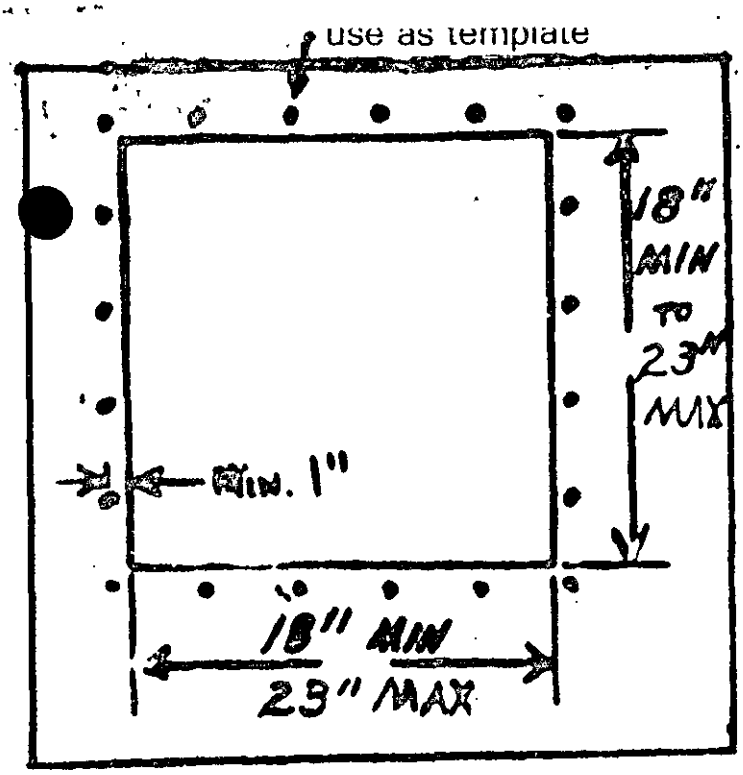

Plan of Tank Opening

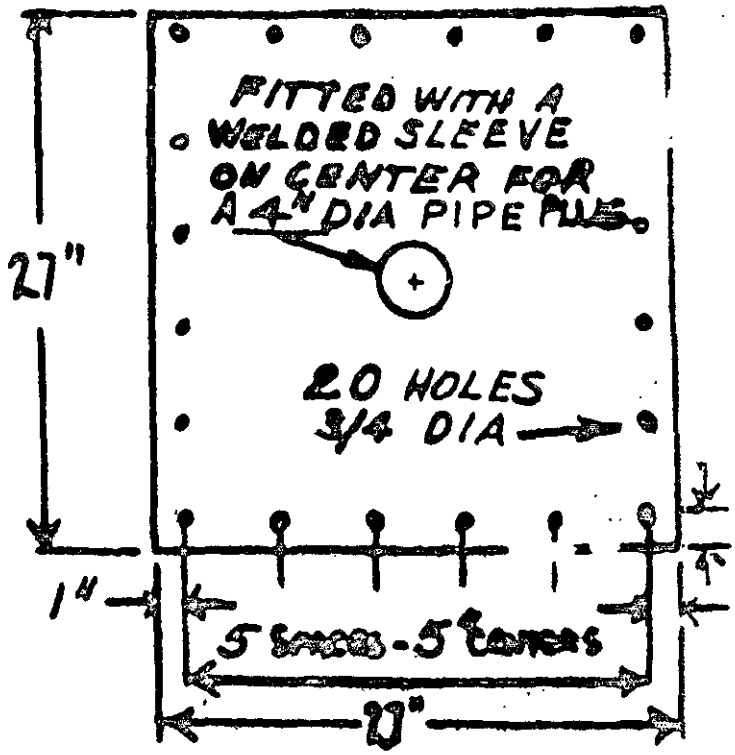

Plan of Tank Cover

NOTE: Make cover of same thickness as steel tank.

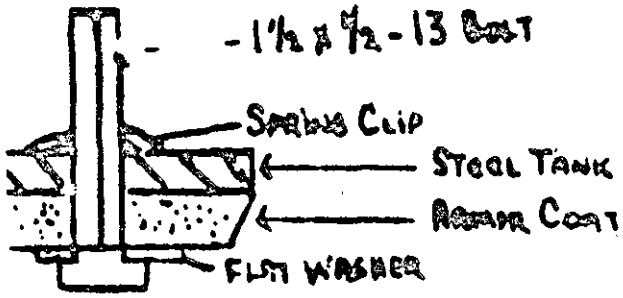

Section thru Bolt

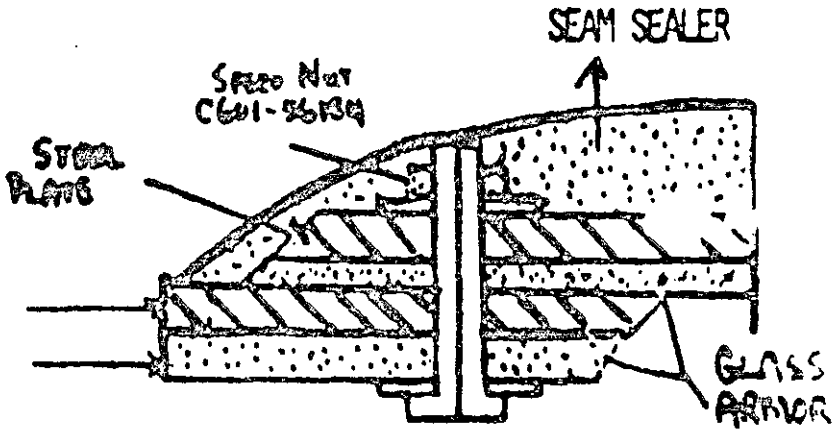

Section thru Sealed Joint

Bridgeport Chemical Corp.
Glass Armor Systems
Seal for a buried Gasoline Storage Tanks
DRAWING - 2

8/80

United States Testing Company, Inc.

Engineering Services Division

1415 PARK AVENUE • HOBOKEN, NEW JERSEY 07030 • 201-792-2400

REPORT OF TEST

82650-1
NUMBER

CLIENT: Bridgeport Chemical Corporation
2610 N.E. 5th Avenue
Pompano Beach, Florida 33064

REGISTERED PROFESSIONAL ENGINEER
ALFRED M. SMOLEN
No. M11724
MECHANICAL
STATE OF CALIFORNIA

May 25, 1983
Referenced Document No.3
Swanson Service Corp.
Report October 9, 1984

SUBJECT: Epoxy Coating System

REFERENCE:

Bridgeport Chemical Corporation letter dated January 15, 1982

SAMPLE IDENTIFICATION:

One (1) sample of material submitted and identified by the Client as:

Epoxy Coating GA27P

TEST PERFORMED:

The submitted sample was tested for the following properties in accordance with Standard Laboratory Procedures using the A.S.T.M. Test Methods listed below as guidelines where applicable.

Property Tested	ASTM Test Method
1. Coeff. of Linear Thermal Expansion	D-696
2. Bonding Strength	Std. Lab. Proc. (Elcometer Model #106 Adhesion Tester)
3. Resistance to Reagents (Immersion @ 73°F)	
(a) Flexural Properties	ASTM D-790
(b) Coating Integrity (Dimensional Stability)	Std. Lab. Proc.
(c) Barcol Hardness	ASTM D-2583
(d) Resistance to Impact	ASTM D-2794

SIGNED FOR THE COMPANY

BY

Frank Pepe
Assistant Vice President

Testing Supervised By:

Frank Razzuoli

Laboratories in: New York • Chicago • Los Angeles • Houston • Tulsa • Memphis • Reading • Richland

THIS REPORT APPLIES ONLY TO THE STANDARDS OR PROCEDURES IDENTIFIED AND TO THE SAMPLE(S) TESTED. THE TEST RESULTS ARE NOT NECESSARILY INDICATIVE OR REPRESENTATIVE OF THE QUALITIES OF THE LOT FROM WHICH THE SAMPLE WAS TAKEN OR OF APPARENTLY IDENTICAL OR SIMILAR PRODUCTS. NOTHING CONTAINED IN THIS REPORT SHALL MEAN THAT UNITED STATES TESTING COMPANY, INC., CONDUCTS ANY QUALITY CONTROL PROGRAM FOR THE CLIENT TO WHOM THIS TEST REPORT IS ISSUED. UNLESS SPECIFICALLY SPECIFIED OUR REPORTS AND LETTERS ARE FOR THE EXCLUSIVE USE OF THE CLIENT TO WHOM THEY ARE ADDRESSED, AND THEY AND THE NAME OF THE UNITED STATES TESTING COMPANY, INC. OR ITS SEALS OR INSIGNIA, ARE NOT TO BE USED UNDER ANY CIRCUMSTANCES IN ADVERTISING TO THE GENERAL PUBLIC AND MAY NOT BE USED IN ANY OTHER MANNER WITHOUT OUR PRIOR WRITTEN APPROVAL. SAMPLES NOT DESTROYED IN TESTING ARE RETAINED A MAXIMUM OF THIRTY DAYS

BRIDGEPORT CHEMICAL CORPORATION

2610 N. [illegible] AVENUE • POMPANO BEACH, FLORIDA 33064 • (305) 781-370[illegible]

SIX MONTH DATA GENERATED ON GA 27P IN VARIOUS TESTS FUELS

Tests Fuels:

a) Basic unleaded

b) 4.58V% Methanol + 4.58V% TBA gasoline

c) 3.3V% Methanol + 7.65V% TBA gasoline blend

d) Water/alc/hydrocarbon bottoms mixture 50V% V Methanol, 20V% Aromatics, 20V% TBA, 10% water

The sample coupons have been continuously immersed in separate containers of the individual test fuels at 75°F.

Percent weigh gain and barcol hardeners were determined after 6 months immersion.

These tests indicate that GA 27P is an acceptable coating for the lining of underground service station tanks containing gasoline oxygenate blends containing Methanol for the test fuels above.

I certified that this is the exact test results as determined by an outside testing laboratory.

Paul I. Meli Jr

Paul I. Meli, Jr.
Executive Vice President

REGISTERED PROFESSIONAL ENGINEER
ALFRED M. SMOLEN
No. M11724
MECHANICAL
STATE OF CALIFORNIA

Referenced Document No. 2
Swanson Service Corporation
Report October 9, 1984

MANUFACTURER & DISTRIBUTOR OF GLASS ARMOR FOR CORROSION CONTROL

CLIENT: Bridgeport Chemical Corporation

82650-1
Number

TEST RESULTS:

Coefficient of Linear Thermal Expansion

Determination	Temperature Range	Coeff. in/in°C
1	-30 to +30°C	4.39×10^{-5}
2	-30 to +30°C	4.44×10^{-5}
Average		4.42×10^{-5}

Bond Strength, psi

Elcometer Model #106 Adhesion Tester

1	2	3	4	5	Average
750	750	1000	1250	750	900

CLIENT: Bridgeport Chemical Corporation

Number 82650-1

TEST RESULTS: (Cont'd)

Resistance to Reagents:

Dimensional Stability

After Immersion @ 73°F for:

	One (1) Month	Three (3) Months	Six (6) Months	Twelve (12) Months
Change in Weight, pct.				
(a) ASTM Ref. Fuel "C"	0.43	0.25	0.52	0.71
(b) Prem. Unleaded, Exxon	0.19	0.40	0.49	0.55
(c) Reg. Leaded, Exxon	0.10	0.25	0.30	0.48
(d) No. 2 Fuel Oil	0.15	0.16	0.19	0.20
(e) Toluene	0.36	1.49	1.77	1.96
(f) Xylene	0.30	0.94	2.00	1.08
(g) Gasohol (10% Ethanol)	0.83	1.34	1.91	2.52
(h) Distilled Water	0.45	0.74	0.83	0.77

CLIENT: Bridgeport Chemical Corporation

Number 82650-1

TEST RESULTS:

Resistance To Reagents:

Flexural Properties

	After Immersion @ 73°F For:			
	One (1) Month	Three (3) Months	Six (6) Months	Twelve (12) Months
Modulus of Rupture, psi: 7810 (Initial)				
(a) ASTM Ref. Fuel "C"	7,660	7,020	6,800	7000
(b) Prem. Unleaded, Exxon	7,870	7,340	7,530	6930
(c) Req. Leaded, Exxon	7,870	7,530	7,350	7080
(d) No. 2 Fuel Oil	7,180	7,560	7,120	7570
(e) Toluene	7,340	6,810	6,210	6470
(f) Xylene	7,730	7,640	7,000	7060
(g) Gasohol (10% Ethanol)	7,550	6,980	5,740	5650
(h) Distilled Water	6,630	5,910	5,660	5760
Modulus of Elasticity, psi: 7.58×10^5 (Initial)				
(a) ASTM Ref. Fuel "C"	7.34×10^5	6.24×10^5	6.52×10^5	7.32×10^5
(b) Prem. Unleaded, Exxon	7.29×10^5	7.11×10^5	6.90×10^5	6.70×10^5
(c) Req. Leaded, Exxon	7.31×10^5	7.04×10^5	6.67×10^5	7.16×10^5
(d) No. 2 Fuel Oil	6.98×10^5	7.42×10^5	6.85×10^5	8.14×10^5
(e) Toluene	7.14×10^5	6.39×10^5	6.02×10^5	6.04×10^5
(f) Xylene	6.97×10^5	6.97×10^5	6.96×10^5	7.22×10^5
(g) Gasohol (10% Ethanol)	6.41×10^5	6.18×10^5	5.74×10^5	5.81×10^5
(h) Distilled Water	6.55×10^5	6.57×10^5	6.03×10^5	6.63×10^5

TEST RESULTS: (cont'd)

Resistance to Reagents:

Dimensional Stability

	After Immersion @ 73°F for:			
	One (1) Month	Three (3) Months	Six (6) Months	Twelve (12) Months
Change in Dimensions, pct.				
1. Length				
(a) ASTM Ref. Fuel "C"	0.04	0.02	0.04	0.09
(b) Prem. Unleaded, Exxon	0.01	0.01	0.04	0.04
(c) Reg. Leaded, Exxon	0	0.02	0.01	0.04
(d) No. 2 Fuel Oil	0.05	0.08	0.04	0.06
(e) Toluene	0.03	0.18	0.17	0.20
(f) Xylene	0.01	0.12	0.14	0.13
(g) Gasohol (10% Ethanol)	0.05	0.24	0.30	0.46
(h) Distilled Water	0.05	0.14	0.16	0.16
2. Width				
(a) ASTM Ref. Fuel "C"	0.12	0.06	0.04	0.12
(b) Prem. Unleaded, Exxon	0	0.12	0.04	0.06
(c) Reg. Leaded, Exxon	0.06	0.06	0.08	0.06
(d) No. 2 Fuel Oil	0.08	0.06	0.06	0.08
(e) Toluene	0.12	0.16	0.12	0.30
(f) Xylene	0.06	0.02	0.22	0.16
(g) Gasohol (10% Ethanol)	0.06	0.20	0.54	0.64
(h) Distilled Water	0.12	0.08	0.18	0.12
3. Thickness				
(a) ASTM Ref. Fuel "C"	0.43	0.16	0	0.41
(b) Prem. Unleaded, Exxon	0.24	0.31	0.13	0.25
(c) Reg. Leaded, Exxon	0.44	0.12	0.29	0.13
(d) No. 2 Fuel Oil	0.29	0.29	0	0.43
(e) Toluene	0.13	0.33	0.40	0.58
(f) Xylene	0.36	0.23	0.28	0.45
(g) Gasohol (10% Ethanol)	0.31	0.92	1.48	1.67
(h) Distilled Water	0.39	0.54	0.38	0.49

CLIENT: Bridgeport Chemical Corporation

Number 82650-1

TEST RESULTS: (cont'd)

Resistance to Reagents:

Barcol Hardness, Model #935

	After Immersion @ 73°F for:			
	One (1) Month	Three (3) Months	Six (6) Months	Twelve (12) Months
(a) ASTM Ref. Fuel "C"	90	90	91	89
(b) Prem. Unleaded, Exxon	92	92	90	89
(c) Reg. Leaded, Exxon	92	91	91	90
(d) No. 2 Fuel Oil	92	91	90	90
(e) Toluene	90	90	88	88
(f) Xylene	92	92	90	88
(g) Gasohol (10% Ethanol)	88	86	83	85
(h) Distilled Water	88	87	87	86

Initial (as Rec.) Hardness 91

Resistance to Impact, Inch-Lbs

Gardner Impact Tester Model #IG 1120, 4 lb Head

(a) ASTM Ref. Fuel "C"	130	120	90	140
(b) Prem. Unleaded, Exxon	130	120	120	140
(c) Reg. Leaded, Exxon	150	120	100	160
(d) No. 2 Fuel Oil	130	100	120	100
(e) Toluene	100	120	130	120
(f) Xylene	140	80	140	140
(g) Gasohol (10% Ethanol)	130	100	110	160
(h) Distilled Water	120	100	100	120

Initial (As Rec.) 160 in/lbs (Max. Capacity)
No Fracture, Slight Indentation.

United States Testing Company, Inc.

Engineering Services Division

1415 PARK AVENUE • HOBOKEN, NEW JERSEY 07030 • 201-792-2400

REPORT OF TEST

82650-1
NUMBER

CLIENT: Bridgeport Chemical Corporation
2610 N.E. 5th Avenue
Pompano Beach, Florida 33064

SUBJECT: Epoxy Coating System

REGISTERED PROFESSIONAL ENGINEER
ALFRED M. SMOLEN
No. M11724
MECHANICAL
STATE OF CALIFORNIA

May 25, 1983
Referenced Document No.:
Swanson Service Corp.
Report October 9, 1984

REFERENCE:

Bridgeport Chemical Corporation letter dated January 15, 1982

SAMPLE IDENTIFICATION:

One (1) sample of material submitted and identified by the Client as:

Epoxy Coating GA27P

TEST PERFORMED:

The submitted sample was tested for the following properties in accordance with Standard Laboratory Procedures using the A.S.T.M. Test Methods listed below as guidelines where applicable.

Property Tested	ASTM Test Method
1. Coeff. of Linear Thermal Expansion	D-696
2. Bonding Strength	Std. Lab. Proc. (Elcometer Model #106 Adhesion Tester)
3. Resistance to Reagents (Immersion @ 73°F)	
(a) Flexural Properties	ASTM D-790
(b) Coating Integrity (Dimensional Stability)	Std. Lab. Proc.
(c) Barcol Hardness	ASTM D-2583
(d) Resistance to Impact	ASTM D-2794

SIGNED FOR THE COMPANY

BY

Frank Pepe
Assistant Vice President

Testing Supervised By:

Frank Razzuoli

1v

Laboratories in: New York • Chicago • Los Angeles • Houston • Tulsa • Memphis • Reading • Richland

THIS REPORT APPLIES ONLY TO THE STANDARDS OR PROCEDURES IDENTIFIED AND TO THE SAMPLE(S) TESTED. THE TEST RESULTS ARE NOT NECESSARILY INDICATIVE OR REPRESENTATIVE OF THE QUALITIES OF THE LOT FROM WHICH THE SAMPLE WAS TAKEN OR OF APPARENTLY IDENTICAL OR SIMILAR PRODUCTS. NOTHING CONTAINED IN THIS REPORT SHALL MEAN THAT UNITED STATES TESTING COMPANY, INC., CONDUCTS ANY QUALITY CONTROL PROGRAM FOR THE CLIENT TO WHOM THIS TEST REPORT IS ISSUED. UNLESS SPECIFICALLY SPECIFIED OUR REPORTS AND LETTERS ARE FOR THE EXCLUSIVE USE OF THE CLIENT TO WHOM THEY ARE ADDRESSED, AND THEY AND THE NAME OF THE UNITED STATES TESTING COMPANY, INC. OR ITS SEALS OR INSIGNIA, ARE NOT TO BE USED UNDER ANY CIRCUMSTANCES IN ADVERTISING TO THE GENERAL PUBLIC AND MAY NOT BE USED IN ANY OTHER MANNER WITHOUT OUR PRIOR WRITTEN APPROVAL. SAMPLES NOT DESTROYED IN TESTING ARE RETAINED A MAXIMUM OF THIRTY DAYS

CLIENT: Bridgeport Chemical Corporation

82650-1
Number

TEST RESULTS:

Coefficient of Linear Thermal Expansion

Determination	Temperature Range	Coeff. in/in°C
1	-30 to +30°C	4.39×10^{-5}
2	-30 to +30°C	4.44×10^{-5}
Average		4.42×10^{-5}

Bond Strength, psi

Elcometer Model #106 Adhesion Tester

1	2	3	4	5	Average
750	750	1000	1250	750	900

United States Testing Company, Inc.

CLIENT: Bridgeport Chemical Corporation

Number 82650-1

TEST RESULTS:

Resistance To Reagents:

Flexural Properties

	After Immersion @ 73°F For:			
	One (1) Month	Three (3) Months	Six (6) Months	Twelve (12) Months
Modulus of Rupture, psi: 7810 (Initial)				
(a) ASTM Ref. Fuel "C"	7,660	7,020	6,800	7000
(b) Prem. Unleaded, Exxon	7,870	7,340	7,530	6930
(c) Req. Leaded, Exxon	7,870	7,530	7,350	7080
(d) No. 2 Fuel Oil	7,180	7,560	7,120	7570
(e) Toluene	7,340	6,810	6,210	6470
(f) Xylene	7,730	7,640	7,000	7060
(g) Gasohol (10% Ethanol)	7,550	6,980	5,740	5650
(h) Distilled Water	6,630	5,910	5,660	5760
Modulus of Elasticity, psi: 7.58×10^5 (Initial)				
(a) ASTM Ref. Fuel "C"	7.34×10^5	6.24×10^5	6.52×10^5	7.32×10^5
(b) Prem. Unleaded, Exxon	7.29×10^5	7.11×10^5	6.90×10^5	6.70×10^5
(c) Req. Leaded, Exxon	7.31×10^5	7.04×10^5	6.67×10^5	7.16×10^5
(d) No. 2 Fuel Oil	6.98×10^5	7.42×10^5	6.85×10^5	8.14×10^5
(e) Toluene	7.14×10^5	6.39×10^5	6.02×10^5	6.04×10^5
(f) Xylene	6.97×10^5	6.97×10^5	6.96×10^5	7.22×10^5
(g) Gasohol (10% Ethanol)	6.41×10^5	6.18×10^5	5.74×10^5	5.81×10^5
(h) Distilled Water	6.55×10^5	6.57×10^5	6.03×10^5	6.63×10^5

TEST RESULTS: (Cont'd)

Resistance to Reagents:

Dimensional Stability

	After Immersion @ 73°F for:			
	One (1) Month	Three (3) Months	Six (6) Months	Twelve (12) Months
Change in Weight, pct.				
(a) ASTM Ref. Fuel "C"	0.43	0.25	0.52	0.71
(b) Prem. Unleaded, Exxon	0.19	0.40	0.49	0.55
(c) Reg. Leaded, Exxon	0.10	0.25	0.30	0.48
(d) No. 2 Fuel Oil	0.15	0.16	0.19	0.20
(e) Toluene	0.36	1.49	1.77	1.96
(f) Xylene	0.30	0.94	2.00	1.08
(g) Gasohol (10% Ethanol)	0.83	1.34	1.91	2.52
(h) Distilled Water	0.45	0.74	0.83	0.77

TEST RESULTS: (cont'd)

Resistance to Reagents:

Dimensional Stability

	After Immersion @ 73°F for:			
	One (1) Month	Three (3) Months	Six (6) Months	Twelve (12) Months
Change in Dimensions, pct.				
1. Length				
(a) ASTM Ref. Fuel "C"	0.04	0.02	0.04	0.09
(b) Prem. Unleaded, Exxon	0.01	0.01	0.04	0.04
(c) Reg. Leaded, Exxon	0	0.02	0.01	0.04
(d) No. 2 Fuel Oil	0.05	0.08	0.04	0.06
(e) Toluene	0.03	0.18	0.17	0.20
(f) Xylene	0.01	0.12	0.14	0.13
(g) Gasohol (10% Ethanol)	0.05	0.24	0.30	0.46
(h) Distilled Water	0.05	0.14	0.16	0.16
2. Width				
(a) ASTM Ref. Fuel "C"	0.12	0.06	0.04	0.12
(b) Prem. Unleaded, Exxon	0	0.12	0.04	0.06
(c) Reg. Leaded, Exxon	0.06	0.06	0.08	0.06
(d) No. 2 Fuel Oil	0.08	0.06	0.06	0.08
(e) Toluene	0.12	0.16	0.12	0.30
(f) Xylene	0.06	0.02	0.22	0.16
(g) Gasohol (10% Ethanol)	0.06	0.20	0.54	0.64
(h) Distilled Water	0.12	0.08	0.18	0.12
3. Thickness				
(a) ASTM Ref. Fuel "C"	0.43	0.16	0	0.41
(b) Prem. Unleaded, Exxon	0.24	0.31	0.13	0.25
(c) Reg. Leaded, Exxon	0.44	0.12	0.29	0.13
(d) No. 2 Fuel Oil	0.29	0.29	0	0.43
(e) Toluene	0.13	0.33	0.40	0.58
(f) Xylene	0.36	0.23	0.28	0.45
(g) Gasohol (10% Ethanol)	0.31	0.92	1.48	1.67
(h) Distilled Water	0.39	0.54	0.38	0.49

TEST RESULTS: (cont'd)

Resistance to Reagents:

Barcol Hardness, Model #935

	After Immersion @ 73°F for:			
	One (1) Month	Three (3) Months	Six (6) Months	Twelve (12) Months
(a) ASTM Ref. Fuel "C"	90	90	91	89
(b) Prem. Unleaded, Exxon	92	92	90	89
(c) Reg. Leaded, Exxon	92	91	91	90
(d) No. 2 Fuel Oil	92	91	90	90
(e) Toluene	90	90	88	88
(f) Xylene	92	92	90	88
(g) Gasohol (10% Ethanol)	88	86	83	85
(h) Distilled Water	88	87	87	86

Initial (as Rec.) Hardness 91

Resistance to Impact, Inch-Lbs

Gardner Impact Tester Model #IG 1120, 4 lb Head

(a) ASTM Ref. Fuel "C"	130	120	90	140
(b) Prem. Unleaded, Exxon	130	120	120	140
(c) Reg. Leaded, Exxon	150	120	100	160
(d) No. 2 Fuel Oil	130	100	120	100
(e) Toluene	100	120	130	120
(f) Xylene	140	80	140	140
(g) Gasohol (10% Ethanol)	130	100	110	160
(h) Distilled Water	120	100	100	120

Initial (As Rec.) 160 in/lbs (Max. Capacity)
No Fracture, Slight Indentation.

United States Testing Company, Inc.

Engineering Services Division

1415 PARK AVENUE • HOBOKEN, NEW JERSEY 07030 • 201-792-2400

REPORT OF TEST

84800
NUMBER

June 28, 1984

Referenced Document No.4
Swanson Service Corp.
Report October 9, 1984

REGISTERED PROFESSIONAL ENGINEER
ALFRED M. SMOLEN
No. M11724
MECHANICAL
STATE OF CALIFORNIA

.LIENT: Bridgeport Chemical Corporation
2610 N.E. Fifth Avenue
Pompano Beach, Florida 33064

SUBJECT: Epoxy Coating System

REFERENCE:

Bridgeport Chemical Corporation, Letter dated February 14, 1983

SAMPLE IDENTIFICATION:

One (1) sample of material submitted and identified by the Client as:

Epoxy Coating GA27P

TEST PERFORMED:

The submitted sample was tested for the following properties in accordance with Standard Laboratory Procedures using the A.S.T.M. Test Methods listed below as guidelines where applicable.

Property Test	A.S.T.M. Test Method
1. Bonding Strength	Std. Lab. Proc. (Elcometer Model #106 Adhesion Tester)
2. Resistance to Reagents (Immersion 73°F)	
(a) Flexural Properties	ASTM D-790
(b) Coating Integrity (Dimensional Stability)	Std. Lab. Proc.
(c) Barcol Hardness	ASTM D-2583

SIGNED FOR THE COMPANY

BY

Frank Pepe
Assistant Vice President

oratories in: New York • Chicago • Los Angeles • Houston • Tulsa • Memphis • Reading • Richland

EPORT APPLIES ONLY TO THE STANDARDS OR PROCEDURES IDENTIFIED AND TO THE SAMPLE(S) TESTED. THE TEST RESULTS ARE NOT NECESSARILY INDICATIVE OR ENTATIVE OF THE QUALITIES OF THE LOT FROM WHICH THE SAMPLE WAS TAKEN OR OF APPARENTLY IDENTICAL OR SIMILAR PRODUCTS. NOTHING CONTAINED REPORT SHALL MEAN THAT UNITED STATES TESTING COMPANY, INC., CONDUCTS ANY QUALITY CONTROL PROGRAM FOR THE CLIENT TO WHOM THIS TEST RE- ISSUED, UNLESS SPECIFICALLY SPECIFIED. OUR REPORTS AND LETTERS ARE FOR THE EXCLUSIVE USE OF THE CLIENT TO WHOM THEY ARE ADDRESSED. EY AND THE NAME OF THE UNITED STATES TESTING COMPANY, INC. OR ITS SEALS OR INSIGNIA, ARE NOT TO BE USED UNDER ANY CIRCUMSTANCES IN ADVER- TO THE GENERAL PUBLIC AND MAY NOT BE USED IN ANY OTHER MANNER WITHOUT OUR PRIOR WRITTEN APPROVAL. SAMPLES NOT DESTROYED IN TESTING

CLIENT: Bridgeport Chemical Corporation Number 84800

TEST RESULTS:

Bond Strength, psi

Elcometer Model #106 Adhesion Tester

1	2	3	4	5	Average
750	1000	500	1250	750	850

CLIENT: Bridgeport Chemical Corporation

Number 84800

TEST RESULTS:

Resistance to Reagents

Flexural Properties

	After Immersion @ 73°F for:			
	One (1) Month	Three (3) Months	Six (6) Months	Twelve (12) Months
Modulus of Rupture, psi:				
12,200 (Initial)				
a) ASTM Ref. Fuel "C"	10,900	11,600	11,800	12,200
b) Prem. Unleaded, Exxon	11,500	12,200	12,800	11,000
c) Reg. Leaded, Exxon	11,500	12,700	12,600	12,400
d) Diesel Fuel	11,700	11,500	12,700	12,500
e) Toluene	12,400	11,300	12,000	11,700
f) Xylene	13,300	12,200	12,300	12,100
g) Gasohol (10% Ethanol)	12,400	12,300	13,900	13,400
h) Distilled Water	10,700	11,000	11,400	10,900
i) Methanol	12,000	9,800	8,900	8,060
j) Ethanol	12,700	13,100	13,600	13,900
k) 10% Methanol	9,060	11,200	11,600	8,040
l) 20% Methanol	10,600	12,600	12,900	10,900
m) 50% Methanol	12,800	12,300	12,900	11,400

CLIENT: Bridgeport Chemical Corporation Number 84800

TEST RESULTS:

Resistance to Reagents

Flexural Properties (cont'd)

	After Immersion @ 73°F for:			
	One (1) Month	Three (3) Months	Six (6) Months	Twelve (12) Months
Modulus of Elasticity, psi:				
7.93×10^5 (Initial)				
a) ASTM Ref. Fuel "C"	6.70×10^5	7.10×10^5	7.53×10^5	8.26×10^5
b) Prem. Unleaded, Exxon	7.18×10^5	7.72×10^5	8.15×10^5	7.57×10^5
c) Reg. Leaded, Exxon	7.39×10^5	8.14×10^5	7.92×10^5	7.45×10^5
d) Diesel Fuel	6.90×10^5	7.14×10^5	8.31×10^5	8.54×10^5
e) Toluene	7.45×10^5	6.34×10^5	7.53×10^5	8.08×10^5
f) Xylene	7.81×10^5	7.48×10^5	7.99×10^5	7.81×10^5
g) Gasohol (10% Ethanol)	7.46×10^5	6.71×10^5	7.68×10^5	8.03×10^5
h) Distilled Water	7.13×10^5	7.75×10^5	7.77×10^5	7.63×10^5
i) Methanol	5.89×10^5	5.32×10^5	5.35×10^5	5.82×10^5
j) Ethanol	7.47×10^5	7.74×10^5	8.39×10^5	7.98×10^5
k) 10% Methanol	6.09×10^5	6.26×10^5	6.58×10^5	6.97×10^5
l) 20% Methanol	5.91×10^5	6.46×10^5	7.09×10^5	6.70×10^5
m) 50% Methanol	6.97×10^5	6.39×10^5	6.96×10^5	6.36×10^5

CLIENT: Bridgeport Chemical Corporation

Number 84800

TEST RESULTS:

Resistance to Reagents

Dimensional Stability

	After Immersion @ 73°F for:			
	One (1) Month	Three (3) Months	Six (6) Months	Twelve (12) Months
Change in Weight, pct.				
a) ASTM Ref. Fuel "C"	0.02	0.08	0.20	0.25
b) Prem. Unleaded, Exxon	0.05	0.13	0.11	0.18
c) Reg. Leaded, Exxon	0.03	0.13	0.11	0.17
d) Diesel Fuel	0.10	0.12	0.13	0.20
e) Toluene	0.05	0.11	0.12	0.23
f) Xylene	0.04	0.13	0.11	0.19
g) Gasohol (10% Ethanol)	0.05	0.16	0.16	0.30
h) Distilled Water	0.05	0.84	0.93	0.94
i) Methanol	1.76	3.11	3.78	4.61
j) Ethanol	0.07	0.08	0.09	0.07
k) 10% Methanol	0.80	1.45	1.45	1.72
l) 20% Methanol	0.68	1.17	1.49	2.11
m) 50% Methanol	0.59	1.33	1.54	1.92

CLIENT: Bridgeport Chemical Corporation Number 84800

TEST RESULTS:

Resistance to Reagents

Dimensional Stability

	After Immersion @ 73°F for:			
	One (1) Month	Three (3) Months	Six (6) Months	Twelve (12) Months
Change in Dimensions, pct.				
1. Length				
a) ASTM Ref. Fuel "C"	0.04	0.05	0.05	0.09
b) Prem. Unleaded, Exxon	0.04	0.03	0.11	0.06
c) Reg. Leaded, Exxon	0.05	0.03	0.08	0.01
d) Diesel Fuel	0.05	0.01	0.12	0.03
e) Toluene	0.08	0.07	0.03	0.07
f) Xylene	0.06	0.04	0.20	0.05
g) Gasohol (10% Ethanol)	0.04	0.05	0.16	0.06
h) Distilled Water	0.06	0.05	0.10	0.19
i) Methanol	0.03	0.13	0.15	0.33
j) Ethanol	0.06	0.02	0.07	0.09
k) 10% Methanol	0.05	0.05	0.11	0.09
l) 20% Methanol	0.13	0.11	0.32	0.24
m) 50% Methanol	0.05	0.12	0.25	0.12

CLIENT: Bridgeport Chemical Corporation Number 84800

TEST RESULTS:

Resistance to Reagents

Dimensional Stability

	After Immersion @ 73°F for:			
	One (1) Month	Three (3) Months	Six (6) Months	Twelve (12) Months
Change in Dimensions, pct.				
2. Width				
a) ASTM Ref. Fuel "C"	0.02	0.08	0.06	0.12
b) Prem. Unleaded, Exxon	0.06	0.04	0.23	0.04
c) Reg. Leaded, Exxon	0.08	0.04	0.41	0.06
d) Diesel Fuel	0.06	0.04	0.79	0.12
e) Toluene	0.02	0.10	0.13	0.10
f) Xylene	0.14	0.10	0.10	0.24
g) Gasohol (10% Ethanol)	0.10	0.08	0.51	0.10
h) Distilled Water	0.08	0.25	0.10	0.21
i) Methanol	0.20	0.27	0.40	0.52
j) Ethanol	0.08	0.10	0.21	0.50
k) 10% Methanol	0.14	0.27	0.28	0.04
l) 20% Methanol	0.16	0.22	0.54	0.19
m) 50% Methanol	0.08	0.10	0.16	0.26

CLIENT: Bridgeport Chemical Corporation

Number 84800

TEST RESULTS:

Resistance to Reagents

Dimensional Stability

	After Immersion @ 73°F for:			
	One (1) Month	Three (3) Months	Six (6) Months	Twelve (12) Months
Change in Dimensions, pct.				
3. Thickness				
a) ASTM Ref. Fuel "C"	0.27	0.24	0.28	1.54
b) Prem. Unleaded, Exxon	0.37	0.88	3.01	0
c) Reg. Leaded, Exxon	0.45	0.85	4.81	0.50
d) Diesel Fuel	0.37	0.46	3.00	0
e) Toluene	0.31	0.12	0.96	0.82
f) Xylene	0.42	0.12	3.68	0.56
g) Gasohol (10% Ethanol)	0	0.37	1.90	0.55
h) Distilled Water	0.10	0.28	0.50	1.18
i) Methanol	0.13	2.13	5.82	4.71
j) Ethanol	0.23	0.19	2.00	1.09
k) 10% Methanol	0.41	1.56	2.30	1.04
l) 20% Methanol	0.75	1.14	2.71	5.28
m) 50% Methanol	0.54	0.81	2.51	1.39

CLIENT: Bridgeport Chemical Corporation

Number 84800

TEST RESULTS:

Resistance to Reagents

Barcol Hardness, Model #935

	After Immersion @ 73°F for:			
	One (1) Month	Three (3) Months	Six (6) Months	Twelve (12) Months
a) ASTM Ref. Fuel "C"	93	92	92	90
b) Prem. Unleaded, Exxon	93	92	90	89
c) Reg. Leaded, Exxon	94	92	90	90
d) Diesel Fuel	93	92	90	89
e) Toluene	93	92	91	90
f) Xylene	93	92	88	90
g) Gasohol (10% Ethanol)	94	94	89	90
h) Distilled Water	91	91	91	88
i) Methanol	81	79	80	76
j) Ethanol	92	92	90	90
k) 10% Methanol	88	83	80	83
l) 20% Methanol	88	85	83	80
m) 50% Methanol	88	85	84	82

Initial (As Rec'd) Hardness 93

HS
38-F
Cal Bd
Mbrs

GLASS ARMOR

SOUTHWEST TANK LINERS, Inc.

OFFICE:
664 WEST MAIN ROAD — P. O. BOX 731
EL CENTRO, CALIFORNIA 92244
619 / 352-4832

LICENSE NO. A418129

January 10, 1985

State Water Resources Control Board
P. O. Box 100
Sacramento, California 95801

Honorable Board Member;

The requirement for vacuum testing of underground motor vehicle fuel storage tanks repaired through the interior coating process was amended from legislation effective January 1, 1985. To regulate a requirement, page 6.10 (a), removed from legislation, is clearly contrary to the spirit and intent of the legislature and the law. A vacuum test of 5.3 inches of mercury on an empty tank serves no useful purpose, which is the reason it was removed. A vacuum test is not required on any other type of in-service installation and therefore seems exceedingly discriminatory. It makes no sense to require testing which serves no useful purpose, is discriminatory, and only serves to increase the cost of repair.

The International Conference of Building Officials, publishers of the Uniform Building Code, Uniform Fire Code, Uniform Plumbing Code, Uniform Electrical Code, etc., recognize the American Petroleum Institute as an authoritative body capable of more than adequate research, testing, and design, in a variety of industry related areas. However, the Water Resources Control Board staff seems to be disallowing industry specifications, guidelines, accepted procedures, and practices because they are not "independent". This is ludicrous. The repair of tanks is routinely recognized by most public officials if it is accomplished through nationally recognized engineering practices, such as API publication 1631. API publication 1631 is specified in the law, effective January 1, 1985, as being an accepted and recognized method of repairing underground motor vehicle fuel tanks.

The removal of the use of the API monogram, page 3.41-2 (6), and the reference to API 1631 on page 6.8 (b), though consistent, seems to be the staff's statement that the petroleum industry is neither capable, adequate, nor responsible enough to develop practices and procedures to effectively police and monitor themselves. One would conclude from staff proposals that the petroleum industry has nothing to lose and their own regulations

Received DTS

JAN 15 1985

are but confetti. No, the petroleum industry has far too great a financial stake to let some regulatory agency remove them from research, design, and testing. We would propose a reinstatement of the wording "API monogram" on page 3.42 (6). Please allow the industry with the most experience in containing motor vehicle fuels, therefore, hazardous substances, to have some say in the development of requirements and recommendations on the continual upgrading of tank storage.

The reference, page 6.6 (V), to a failure within six (6) inches of a seam or weld is somewhat new. We have not seen any engineering data supporting the recommendation of such criteria for the denial of a repair. Often times a leak may occur in a seam or weld because of a localized, pinpoint weld abberration, and will not be due to an overall deterioration of the weld. The weld may remain strong though there be a minor perforation. API 1631 is very clear as to what conditions are or are not repairable. Is staff capable and qualified to write specifications for the petroleum industry? To regulate is one ballgame, to specify design or repair criteria seems to be another ballpark. Specifications need to be left up to those with first hand field experience, not just hearsay evidence.

Certification by an independent testing laboratory is unnecessary, onerous, burdensome, and overly costly. To require certification of a process that has over thirty (30) years experience successfully containing hazardous materials is requiring an outlay of funds to satisfy some staff members' curiosity and is tatamount to grounding all Boeing 747's until it is certified as an aircraft suitable for carrying passengers and cargo when they have millions of hours of inflight service. The success of tank linings is well documented, a less than one-half of one percent failure rate with over a quarter of a million installations at service stations alone. Bureaucratic refusal to recognize and accept an outstanding industry success story simply ensures cost increases and with that the public interest will not be best served.

Certification by a national independent testing organization of a process will do only what API 1631 has done. In effect it will say that if a tank is repaired in a certain manner, it will be capable of containing some specified product. The inspections will still be left to the local agency to ensure adherence to certified specifications or nationally recognized engineering practices. Tanks repaired through the interior coating process routinely have a minimum of a ten (10) year guarantee. Due to massive requirements of time, money, and organization, there is no testing laboratory in the world capable of certifying each and every tank repair or liner installation.

Underwriters Laboratories, Factory Mutual, etc., consistently rely upon the local agency to insure field installations are accomplished according to nationally recognized engineering principles. Until recently Underwriters Laboratories have maintained that they would not certify or list the lining process because of the inumerable variables always found in field applications of coatings.

We recommend that you not attempt to change the letter nor the intent of legislation. Legislation clearly states a method of repair is acceptable if consistent with API 1631. There can be no doubt that legislation has removed the vacuum test requirement. It is an irrelevant measure. The staff recommendations in the draft of August 1984, are consistent with the spirit and intent of the legislature. This current draft is not.

In conclusion, no mention was made that substantive changes were being made to this section prior to the November 9, 1984 draft publication. The November 9, 1984 draft contained not a few surprises. To spring substantive changes without the appropriate public comment period is at best an oversight and at worst illegal. The November 9, and December 28, 1984 drafts clearly are beyond the spirit and intent of the legislature. With this in mind we urge the following portions of the draft document be deleted and not adopted: 2661., c., 2., B., V.; 2662., d.; and 2663., a., (all after " . . . article 4 of this subchapter").

Thank you for the opportunity to comment on this important matter.

Sincerely,

Bob Meacham
Southwest Tank Liners

#39 7/5

ENCINITAS CAR WASH

(619) 436-1522 293 N. El Camino Real Encinitas, CA 92024

A Clean Car Runs Better

October 15, 1984

State Water Resources Control Board
P.O. Box 100
Sacramento, Ca. 95801
Att: Harold Singer, Div. of Tech. Services

Re: Proposed Regulations Governing Underground Storage Tanks of Hazardous Materials

Dear Mr. Singer,

In accordance with the Notice of Proposed Rulemaking of the subject matter, the following comments are submitted in favor of the small business owner/operator.

a. Comment. In southern California (San Diego County) the Air Pollution Control District (APCD) requires a pressure check of underground gasoline tanks and lines at the initial installation. This test is made by authorized personnel to determine if tanks and gasoline lines are leak proof. A copy of the test report is submitted to APCD by each facility.

Recommendation. That the APCD pressure test for underground gasoline tanks be accepted by the State Water Resources Control Board to determine if systems are leak proof. Thereafter pressure checks be reqiured every five years.

b. Comment. The state has estimated the cost for the installation of vadose ground testing equipment per facility to be $5000.00. This is considered an excessive cost for small businesses.

Recommendation. That small businesses owners/operators whose underground tanks are located on land not affecting ground water be exempt from this vadose ground testing. For small businesses having tanks adjacent to ground water that is utilized by the local population, the state should pay for the installation of

Received DTS OCT 18 1984

ENCINITAS CAR WASH

(714) 436-1522 293 N. El Camino Real Encinitas, CA 92024 *A Clean Car Runs Better*

vadose zone testing equipment. For future facilities installing underground gasoline tanks, small business operators would be required to install this monitoring equipment at the owners expense.

c. Comment. All operators of underground storage tanks should maintain daily records of contained fluids using measuring devices such as dip sticks with gallonage conversion charts. This should satisfy the State Water Resources Board's proposed record keeping requirements.

Recommendation. None.

Respectfully submitted,

John T. O'Der

John T. O'Der
owner/operator

#40 HS

-LEE'S-
HONDA-KAWASAKI
A CALIFORNIA CORPORATION
2230 LARKSPUR LN.
REDDING, CA - 96002
916-221-6788

October 16,1984

Mr. Harold Singer
Division of Technical Services
State Water Resources Control Board
P.O. Box 100
Sacramento, Ca. 95801

Dear Sir:

As a concerned businessman I have heard of the proposed Regulations concerning underground storage of gasoline, of which I have installed a 500 gallon underground tank, I am concerned about the regulations and the requirements you are proposing.

This tank allows us to operate more productively and safely due to the fact that we are in retail sales of Honda Motorcycles, I have found in the past when we did not have such a facility that we had to transport gas in 5 gallon cans to service new units, consequently we had a big fire hazard with fuel in 5 gallon cans stored in our service area.

We have this tank for the convinence and safety of the personnel and our customers, to implement restrictions on the storage of gasoline would make it to costly to the business and very hazarderous to the personnel and customers.

Therefore, I oppose the severe restrictions for underground tanks as being costly. No one wants to contaminate our underground water supply.

I am for some restrictions but lets not go overboard. Please let me know the decision on this matter as soon as possible.

Regards,

Dean Lee

cc: Jack Reiser
Redding Oil

Received DTS
OCT 19 1984

SOUTH WEST TANK LINERS, INC.
J. R. SESSIONS
P. O. BOX 731 - EL CENTRO, CALIFORNIA 92243

PALM SPRINGS CA 922 1B
PM
11 JAN
1985

ALWA
USE ZIP
USA
20c

State Water Resources Control Board
Harold Singer
P. O. Box 100
Sacramento, Ca 95801

Original Comments 41-50

Index to Rulemaking File Underground Storage Tank Regulations Title 23, Waters Division 3, Water Resources Control Board Chapter 16, Underground Storage Tank Regulations 1985

#41 HS

CENTRAL AND WEST BASIN
WATER REPLENISHMENT DISTRICT
7439 EAST FLORENCE AVENUE
DOWNEY, CALIFORNIA 90240
TELEPHONE 927-2611 • 773-5790

DIRECTORS
DOUGLAS W. FERGUSON, PRESIDENT
CHARLES D. BARKER, VICE PRESIDENT
DAN GLASGOW, TREASURER
EMMETT E. BROWN
JOHN P. KEARNEY
JOHN G. JOHAM, JR., GENERAL MANAGER & SECRETARY

October 19, 1984

State Water Resources
Control Board
Post Office Box 100
Sacramento, CA. 95801

Attention: Mr. Harold Singer
Division of Technical Services

Gentlemen:

Thank you for the opportunity to review the proposed regulations governing underground storage of hazardous substances (to be codified in Subchapter 16 of Chapter 3, Title 23, California Administrative Code). This District supports your efforts to control and monitor the storage of hazardous wastes in underground tanks in order to prevent the contamination of ground water quality from leaking facilities.

The Central and West Coast ground water basins of Los Angeles County are a vital part of the water supply for a highly urbanized area with over 3 million population. The Central and West Basin Water REplenishment District is the public agency responsible for ground water replenishment within these basins. In carrying out its responsibilities the District may take any action necessary to protect or prevent interference with water, the quality thereof, or water rights of persons or property within the District. We, therefore, have major interest regarding the impact of hazardous and non-hazardous wastes on ground water quality.

Our major area of concern with these regulations is the requirement that exploratory wells (for determination of depth to ground water) extend into confined aquifers. (Sec. 2647 (d) (6) (c)). A significant portion of the ground water in the Central and West Coast Basins is contained within confined aquifers. Our experience with a number of leaking underground tank facilities has shown that the overlying clay aquicludes act

Received DTS
OCT 23 1984

as a natural barrier to vertical movement of hazardous wastes into the underlying ground water. Accordingly, it is our position that penetrating exploratory or monitoring wells into a confined aquifer would provide a vertical conduit for leaking hazardous wastes facilitating the contamination of the underlying ground water.

Therefore, we recommend that the regulations be changed to prohibit the penetration of confined aquifers by either exploratory or monitoring wells. In any case, the required design of monitoring and exploratory wells for hazardous underground tanks might best be handled on a case-by-case basis utilizing performance rather than design standards.

Very truly yours,

Central and West Basin Water
Replenishment District

John G. Joham, Jr.
General Manager

JGJ/eb

#42 NS

PROFESSIONAL SERVICES GROUP, INC.
CORROSION ENGINEERING DIVISION
Western Region — Waters Consultants

7807 Convoy Court, Suite 110 • San Diego, California 92111 • (619) 565-6580

October 16, 1984

Mr. Edward C. Anton, Chief
Division of Technical Services
State Water Resources Control Board
P.O. Box 100
Sacramento, CA 95801

Subject: Underground Tank Regulations to Implement AB 1362 - Sher Bill

Dear Mr. Anton:

I understand that you are responsible for developing regulations to implement AB 1362 Sher Bill. From my experience as a corrosion engineer I do not believe that the current draft of these regulations are in the best interest of the citizens of the State of California. I believe there are acceptable alternatives to "secondary containment" that will not have such a tremendous cost impact to tank users and ultimately, consumers. I also believe that the requirements for monitoring wells is not only excessive but also may be counterproductive in your efforts to keep the state's water resources clean.

It appears that action on this whole matter was somewhat hasty. Accordingly, I ask you to slow down the proceedings and allow time and a suitable forum for alternate points of view to be thoroughly presented and assessed.

Thank you for your consideration of this matter.

Sincerely,

Donald M Waters

Donald M. Waters, P.E.
Corrosion Engineer

EAD4/pl
841231

cc: Bill Stead

Received DTS
OCT 19 1984

#43 HS

Executive Wings, Inc.

October 16, 1984

Mr. Harold Singer
DIVISION OF TECHNICAL SERVICES
P.O. Box 100
Sacramento, CA 95801

RE: Proposed Regulations/Underground Storage

Dear Mr. Singer:

Unfortunately, due to a prior commitment, I will be unable to express my views personally at the October 23rd meeting.

Everybody is for clean air, water, earth, etc., but at what cost and limitation. Everything is a compromise and this issue is no different. We can not afford the catastrophic monetary effect of a past contamination (if any). We are having a difficult time just surviving now.

Also, we strongly urge you to not go beyond the intent of Bill 1362. Be reminded that whatever problems exist today (if any), it did not happen overnight. We should go about our problem solving in the same manner.

Sincerely,

EXECUTIVE WINGS, INC.

Ron

Ron Weidman,
President

RW/gd

enclosure

Received DTS
OCT 18 1984

4985 East Anderson Avenue, Fresno, California 93727
Phone (209) 252-1951 • TELEX NO. 355-333
FULL LINE CESSNA DEALER— FRESNO AIR TERMINAL
Cessna

Copy Con + ATTS

BEACON OIL COMPANY
525 WEST THIRD STREET • HANFORD, CA 93230 • (209) 582-0241

October 10, 1984

SUBJECT: ADOPTION OF PROPOSED REGULATIONS GOVERNING UNDERGROUND STORAGE OF HAZARDOUS SUBSTANCES BY THE STATE OF CALIFORNIA WATER RESOURCE CONTROL BOARD

Dear Customer:

Important regulations affecting your business are about to be adopted. Please take a couple of minutes to read this and if you can attend the meeting or make written comments, it will be well worth your time.

The recent passage of the Underground Storage of Hazardous Substances Act ("Act") is the most important California legislation in the last 25 years that will operationally and financially affect anyone owning and/or operating a storage tank used for storing fuel, solvents, oil, etc. like yourself. Even more important are the proposed regulations ("regs") prepared by the State Water Resources Control Board implementing this act. In our opinion, and in the opinion of various associations such as California Independent Oil Marketers Association (CIOMA) and Western Oil and Gas Association (WOGA), the proposed regs go far beyond the jurisdiction granted to the Board by the Act.

To comment in detail on the proposed regs would be a sizeable task, WOGA's comments and recommendations exceed 50 pages. Every page includes important criticism and constructive comment. It will be expensive to comply with even the simplest set of regulations; however, given a reasonable time

MEMBER OF THE ULTRAMAR GROUP OF COMPANIES

frame, most companies and individuals affected would be able to comply. The proposed regs, however, are not simple and go far beyond the jurisdiction granted to the Board by the Act. The proposed regs as they now stand would likely cause enormous expenditures and threaten the survival of many companies who own and/or operate underground tanks. What follows is but a very few of our concerns, and most importantly, what you can do to help control the potentially immense costs that all will incur.

To begin with, compliance must be accomplished by July 1, 1985, yet the fiscal impact study prepared by the State allows for a five-year implementation. The six-month time frame for compliance is unrealistic and does not allow for alternatives to be considered, let alone implemented.

One section of the proposed regs states that one of the objectives of the monitoring program is "to determine if unauthorized releases have occurred in the past". In another section, the proposed regs state, the soil-testing requirement is expressly designed "to determine if prior usage of the underground storage tank has resulted in an unauthorized release." In contrast, the main section in the Act relied upon by the Board as authority in the proposed regs, speaks only of "a monitoring system capable of detecting unauthorized releases" of hazardous substances. Nothing is stated in the Act regarding past or historical unauthorized releases. The cost to clean up historical releases can easily run into the tens of thousands of dollars.

The Act statute regarding monitoring of tanks installed prior to January 1, 1984 allows for "Alternative methods of monitoring the tank on a monthly or more frequent basis that may be required by the local agency." However, the proposed regs list a number of monitoring methods, all of which are required for existing tanks...again very expensive and clearly not what was intended by the statute. Examples such as these are throughout the proposed regs.

While none of us want to contaminate the underground water supply, the proposed regs go far beyond the jurisdiction granted to the Board by the Act. These regs impose unnecessary costs that can threaten the financial survival of all of us.

On October 23, 1984 there will be a public hearing relating to these proposed regs. All interested persons are invited to attend. This hearing will be held at 10:00 a.m. at the Resources Building, First Floor Auditorium, 1416 Ninth Street, Sacramento, California. We also encourage you to send your comments, no matter how brief, to Harold Singer, Division of Technical Services, P. O. Box 100, Sacramento, California, 95801 (deadline for comments is October 23, 1984 at 5:00 p.m.)

These comments will help control the potentially immense costs that may be imposed on all of us. Your comments might briefly state your concern that the regs should not go beyond the jurisdiction granted to the Board by Bill 1362 or its intent. You might also want to indicate the financial impact of a $100,000.00 to $200,000.00 clean-up of a "historical release" would have on your business. These letters of comment are important. They will emphasize the importance of the Board's consideration of the analysis and alternatives presented by CIOMA, WOGA, California Manufacturers Association and others.

Yours truly,

BEACON OIL COMPANY

R. J. Lowe
Vice President

RJL:bl

/ #44 HS

OCTOBER 17, 1984

MR. HAROLD SINGER
DIVISION OF TECHNICAL SERVICES
STATE WATER RESOURCES CONTROL BOARD
P. O. BOX 100
SACRAMENTO, CA 95801

DEAR MR. SINGER:

WE HAVE HEARD OF THE PROPOSED SWRCB STANDARDS AND PROCEDURES FOR PERMIT PROGRAMS FOR UNDERGROUND STORAGE OF HAZARDOUS SUBSTANCES INCLUDING GASOLINE, DIESEL, AND DRAIN OIL. IN SHORT, THE PROPOSED REGULATIONS GO WELL BEYOND THE INTENT OF THE LEGISLATION ON WHICH THEY ARE BASED.

AS THE REGULATIONS NOW STAND, THEY ARE LIKELY TO CAUSE MONITORING EXPENDITURES SO GREAT THAT WE MAY HAVE TO CONSIDER REMOVING OUR TANKS. EVEN IF WE DECIDED TO REMOVE OUR TANKS WE WOULD HAVE TO SPEND THOUSANDS OF DOLLARS TRANSPORTING THE TANKS AND ANY SOIL SHOWING HISTORICAL HYDROCARBON PRESENCE UNDER THE TANKS TO OUR NEAREST CLASS I HAZARDOUS WASTE DISPOSAL SITE WHICH IS IN BENICIA.

THE FINANCIAL RETURN WE ARE EARNING FROM THE UNDERGROUND STORAGE OF PETROLEUM PRODUCTS IN NO WAY CAN JUSTIFY COMPLICATED AND EXPENSIVE MONITORING DEVICES AND THE POSSIBLE CLEAN UP OF A HISTORICAL SPILL OR LEAK ON OUR PROPERTY WHICH MAY HAVE HAPPENED BEFORE WE OWNED IT.

NO ONE WANTS TO CONTAMINATE OUR UNDERGROUND WATER SUPPLIES BUT THE RECENT REGULATIONS DRAFTED BY THE SWRCB TO ESTABLISH STANDARDS AND PROCEDURES FOR PERMIT PROGRAMS IS TOTALLY UNREALISTIC. ALSO, COMPLIANCE DATE OF JULY 1, 1985, FOR TANK TESTING AND POSSIBLE INSTALLATION OF MONITORING WELLS NEAR OUR TANK IS COMPLETELY UNREALISTIC.

SINCERELY,

DIVERSIFIED DISTRIBUTORS, INC.

Dave Jensen

DAVE JENSEN
GENERAL MANAGER

DJ:DI

Received DTS
OCT 19 1984

DIVERSIFIED DISTRIBUTORS, INC.
1440 Spruce Street, P.O. Box 835, Redding, CA 96001 • 916/243-2921

/ #45 #13

BOONE'S WHOLESALE INC.

P.O. DRAWER B
1101 CENTER STREET
REDDING, CALIFORNIA 96001
PHONE: 916/241-4631

October 17, 1984

Mr. Harold Singer
Division of Technical Services
State Water Resources Control Board
P.O. Box 100
Sacramento, California 95801

Dear Sir:

In reviewing the new proposed regulations for monitoring underground fuel storage tanks, I feel that the SWRCB is far exceeding the justifiable scope of the intent for monitoring.

Most businesses today are using secondhand grounds and "who" knows what was there before.

I think the monitoring and maintaining of records on fuel storage and usage is a good idea. "But" I think we have to keep it in the realm of being reasonable and financially feasible in relation to all businesses large or small and also in respect to state and county. In the end it will be John Q Public who pays the bill.

I sincerely hope we can approach this in a more realistic manner than what I have seen proposed to date.

Respectfully,

Fred Boone

Fred Boone
Boone's Wholesale

FB/rn

Received DTS
OCT 19 1984

#46 #5

DUBLIN SAN RAMON SERVICES DISTRICT

General Offices: 7051 Dublin Boulevard • Dublin, California 94568 • (415) 828-0515

October 17, 1984

Mr. Harold Singer
Underground Tank Program
State Water Resources Control Board
P.O. Box 100
Sacramento, CA 95801

Subject: Underground Tank Regulations - Draft dated Sept. 6, 1984

Dear Mr. Singer:

We have reviewed subject draft and find it to be quite comprehensive. We find, however, at least one item which should be refined. The proposed monitoring requirements for fuel tanks are not consistent with the relatively minor pollution hazard posed by individual tanks, particularly small tanks and tanks with a low volume usage. Specifically, this District has seven underground tanks which contain fuel and lubricating oil. The monitoring required for these would be the same as that for larger tanks, tanks with orders of magnitude greater annual usage, tanks containing very hazardous chemicals and tanks adjacent to water supply intakes. Certainly different and more cost effective monitoring requirements will be developed for the low risk tanks. We offer our assistance in development of such requirements.

For each District tank, the draft regulations would require the following expenses:

Requirement	Section No.	Estimated Cost	
Initial Test			
Leak Testing	2642	$ 500	
Soil Testing	2644	1,500	
Construct 3 monitoring wells	2646	1,500	
Sub Total Initial Testing			$3,000
Continuing Monitoring			
Daily Inventory	2643	$2,300/yr.	
Weekly groundwater monitoring	2646	2,700-3,950/yr.	
Annual leak testing		500	
Subtotal annual costs			$5,500 - 6,550

For the District's seven tanks, these costs would amount to $21,000 initially and $38,500 to $45,850 annually. These are patently exhorbitant and unjustified and will actually be greater because they do not include District administrative costs nor local surveillance fees.

Received DTS
OCT 19 1984

Cost effective monitoring must consider the potential hazard and commensurate levels of monitoring to control that risk. The potential hazard is directly proportional to (1) the nature of material stored underground, (2) the quantity of that material and (3) the proximity of storage to domestic water supply wells. The intensity of monitoring must be related to relative hazard and the cost of monitoring

A fundamental principle of water pollution control in California is that control should be related to differing conditions. This is the basis for having regional boards and individual discharge requirements. The proposed regulations violate this principle. Where tens of thousands of gallons of acutely toxic or carcinogenic material are stored close to domestic water intakes, e.g. as occurred in the Santa Clara Valley, there is ample justification for intensive monitoring. However, where a relatively small volume of fuel is remote from a water intake, all that can be justified is a safety-net level of monitoring. The proposed regulations should be revised to include this sensitivity to substantially differing conditions.

This District has seven tanks located considerable distances from the nearest water supply wells. These wells are used only for standby, because state water is used in this Valley. The District tanks are as follows:

Tank No.	Tank Vol. Gals.	Contents	Usage: Annual Amt* Gals.	Usage: Purpose	Distance from Water Wells
W-1	550	Waste Oil	-	Storage for pickup	1 mile
W-2	1000	Gasoline	5,528	Fueling vehicles	1 mile
W-3	1000	Gasoline	3,475	Fueling vehicles	1 mile
W-4	550	Lube Oil	840	Lube for vehicles	1 mile
W-5	4500	Diesel	5,341	Vehicle fuel and standby power	1 mile
L-1	100	Diesel	20	For emergency power	1.5 miles
F-1	550	Diesel	2,038	Fueling fire fighting vehicles	3 miles
F-2	4000	Gasoline	13,288	" " "	3 miles
F-3	500	Diesel	1,037	" " "	3.6 miles

*During fiscal year 1983-84

Because of their volumes, contents and distances from domestic water intake, none of these tanks pose an immediate hazard to water supplies. Therefore, the only monitoring justified is that which would periodically determine the integrity of tanks. Section 2642 of the draft regulations provides for that determination with annual testing. Therefore, it is recommended that a new section (2611-c) be added to exempt:

> "Underground tanks that are operated by local public agencies and are used for storage of gasoline, diesel fuel or lubricating oil, provided that these tanks are subject to Section 2642 of these regulations."

This refinement would provide for the effective use of public funds while relying on long term administrative capabilities of public agencies. It would also permit detection of leaks in pipelines which ground water monitoring might never reveal. Pipelines are closer to the ground surface and often extend considerable distances from tanks. Pipeline leaks often surface at remote locations.

We are available to review this recommendation at your convenience. Please contact me if you wish such a review.

Sincerely,

Dan Murphy

Daniel F. Murphy
Engineering

DFM:ns
0271N

John's Exxon + Mini Mart
2725 Cascade Blvd.
Redding, Ca. 96003

#41 Oct 16, 1984 #5

Dear Mr. Singer,

We were informed yesterday of the proposed regulations to establish standards and procedures for underground storage of hazardous substances.

We agree that there must be some sort of method to detect leaks. However, the draft regulations that you are proposing, would literally put the small business, out of business. It is unfair to put such burden on an individual.

We stick our tanks every morning, thus keeping a physical inventory of our products. We do not make enough money from our gasoline sales to justify adding these devices.

We think you are going well beyond the standards necessary and the capability of small businesses to comply. Please consider our position when you make your decision.

Sincerely,
Mr + Mrs Gary Silveria

Received DTS
OCT 19 1984

#48 HS

ENERGY PETROLEUM

P. O. Box 744
Stockton, California 95201

October 18, 1984

Mr. Harold Singer
Division of Technical Services
P. O. Box 100
Sacramento, California 95801

Dear Mr. Singer:

It is of deep concern that the regulations should not go beyond the jurisdiction granted to the Board by bill number 1362 or its intent.

I point out that the financial impact to Energy Petroleum, Cardway Fuel and Major Stations on the basis of "Historical Release" could bankrupt them all and leave all employees out of work.

Please give every effort to bring fair treatment to all those in the petroleum business who are trying to serve the public interest.

Sincerely,

Peter W. Smith
President

PWS:cs

Received DTS
OCT 19 1984

#49 48

GASOLINE • LUBE OIL • TIRES • HEATING OIL

Toms Sierra Company, Inc.

P. O. BOX 759
COLFAX, CALIFORNIA 95713

(916) 346-2264

October 18, 1984

State Water Resources Control Board
P.O. Box 100
Sacramento, CA 95801

Attention: Harold Singer
Division Technical Services

Subject: California Administrative Code Title 23 Waters, Chapter 3 Water Resources Control Board, Subchapter 16 Regulations for Underground Storage or Hazardous Substances.

Dear Mr. Singer:

We realize the law related to the subject code is in place and that the Water Resources Control Board has been charged with the responsibility to interpret the law and draft requlations for its implimentation. The purpose of this letter is to express our concerns over the proposed requlations as well as to make suggestions as to changes or additions we would like to submit for your consideration. We will restrict our comments to those Articles and Sections of those Articles which seem the most difficult to accept from a practical and/or economic standpoint.

ARTICLE 3 NEW TANKS AND MONITORING STANDARDS

General Comments: We feel continuous monitoring of a new installation meeting Article 3 requirements cannot be justified. We believe all testing or monitoring equipment should be approved by the State. Under Section 2632 (E) (I) the standing liquid level should be raised to at least 2.0 inches.

ARTICLE 4 EXISTING TANK MONITORING CRITERIA

General Comments: This Artical of the regulations creates the greatest economic hardship of all the Articals, particularly on the independant petroleum dealer and jobber. Our suggested changes follow:

1. All underground tanks and lines used for the storage and dispensing of motor fuels should be tested, using a testing proceedure acceptable by the State, as required in Section 2642 (C) and (D), and repeated annually.

2. In the event NO leaks are detected, by tests required in Section 2642 (C) and (D), the tank owner and/or operatior must preform daily inventory reconcilliations, as required in Section

Rece
OCT 19 1984

2643, however, the owner/operatior will be exempt from section 2644, Soil testing and exploratory boring and Sections 2645, 2646 2647 and 2648 which pertain to monitoring.

3. All underground motor fuel storage tanks with a volume capacity of 2000 gallons or less to be exempt from sections 2645, 2646, 2647, 2648 of Artical 4, provided that annual tank tests required in Artical 4 Section 2643 and daily inventory controls required in Artical 4 Section 2643 show the tanks and lines to be product tight and no product loss has been detected.
   This recommendation is made to minimize the number of small independant dealers this law and its regulations will put out of business. It is obvious that the owner, or a retail location with 2000 gallon underground storage tanks cannot justify the economic burden with the small volume throughput he is capable of generating.

4. In the event tank tests and/or inventory controls detect a product leak, all the preventative measures would be triggered beginning with Artical 5, Release Reporting; Artical 6, Allowable Repairs; and possibly Artical 3, New Tank Construction.

5. We Suggest that an owner who makes the decision to replace existing tanks with new tanks, in lieu of meeting the requirements called for in Artical 4 of the Regulations, be exempt from the requirements of Artical 4. This would illiminate a useless expense.

We submit that the above suggestions would save the California tax payers, consumers, small petroleum businessmen and the State in excess of $1,500,000,000.00 over the first five years. (Based on State cost estimates). Also, these suggestions would give the State and industry time to evaluate the results of tests to see if the problem is as serious as it is assumed, and prevent the unnecessary demise of many small businessess.

Sincerely,

L.R. Stillson
Executive Vice President
Toms Sierra Co., Inc.

CC. Assemblyman Sher

California Independent Oil
Marketers Association

California Service Station
Dealers Association

#50 HS

COUNTY OF SACRAMENTO

HEALTH DEPARTMENT
RONALD L. USHER, DIRECTOR

ENVIRONMENTAL HEALTH BRANCH
3701 Branch Center Road
Sacramento, California 95827
(916) 366-2101

October 19, 1984

Harold Singer
Division of Technical Services
State Water Resources Control Board
P.O.Box 100
Sacramento, Ca. 95801

Subject: DRAFT REGULATIONS; Subchapter 16 Underground Tank Regulations

Dear Mr. Singer:

Although Sacramento County is exempted from the draft underground tank regulations, it is to our mutual benefit to to submit comments on the proposed regulations. The underground tank monitoring regulations must provide for the early detection of leaking tanks in a cost effective manner. To that end, these comments are conceptual, rather than specific language changes. The areas of concern are: monitoring requirements for new facilities, monitoring requirements for existing facilities, and exemptions.

NEW FACILITIES

Article 3, section 2632 requires not only continuous monitoring, but requires monitors of certain types. It would be better to require levels of performance for the monitoring system, rather than specify how that monitoring should be accomplished. This would allow for innovation which could increase sensitivity and/or reduce cost. Then the burden of proof, as well as performance, falls appropriately on the operator.

The same comments apply to section 2634 as well. Additionally, inventory control to the stated performance requirements is probably not feasible. Any place that has tremendous variations in temperature, such as the Sacramento Valley, would require temperature corrections to approach the required sensitivity levels. Each additional measurement simply adds to the possibility of errors being made.

EXISTING FACILITIES

Under the proposed regulations, existing facilities must: provide soils analyses, daily inventory monitoring, vadose zone monitoring, and groundwater monitoring. This program provides for glimpsing into the past, and may provide early detection of leaks. However, the purpose of the program is to protect groundwater, not to provide pipelines for contaminants to reach the groundwater. This, unfortunately, is exactly what the proposed regulations provide; a method to contaminate the groundwater. The redundant systems

Received DTS OCT 19 1984

required by the proposed regulations provide for very little additional protection, but at a greatly increased cost.

Precision leak testing does not guarantee that there has been no previous leakage, however, it is rather uncommon for tanks to repair themselves. And it is also true that a tank may spring a leak after the leak test is completed. However, we believe that a program of annual precision leak testing, coupled with inventory control monitoring, will certainly detect leaks of any consequence prior to any substantial environmental damage.

EXEMPTIONS

Many small businesses and private parties in semi-rural and rural areas operate underground tanks. Inventory control is impossible because these tanks do not have metered delivery systems, and even if meters were installed, there is no check on their accuracy, since Weights and Measures will not calibrate non-commercial delivery systems. Most of these tanks have low throughputs. A system of graduated exemptions should be added to the proposed regulations. For example:

ANNUAL THROUGHPUT	MONITORING REQUIREMENTS
500 gallons or less	none
501 gallons to 12,000 gallons	precision leak testing every 5 years
12,001 gallons to 24,000 gallons	precision leak testing every 3 years

SUMMARY

The draft regulations have inconsistencies, require excessive redundancy, and may well endanger the groundwater we are supposed to protect. Obviously, a major revision of these draft regulations is required to make them both efficient and effective.

Sincerely Yours,
Carl W. Overmier, Manager
Environmental Health Branch

by: Robert A. Knight, Supervisor
Hazardous Materials Management